衛生福利部
Ministry Health and Welfare

Taiwan Herbal Pharmacopeia 2nd Edition English version

臺灣中藥典第二版英文版

Ministry Health and Welfare
Published in November, 2016

Taiwan Herbal Pharmacopeia 2 Edition English version

臺灣中藥典

第二版英文版

Ministry of Health and Welfare
Taiwan, Republic of China
November, 2016

Preface

Most of the Chinese herbs used in Taiwan were relied on import. The species of herb are enormous and complicated. The quality of Chinese herbs may be affected by the growing areas, origin of species, parts of use, cultivation and storage conditions. In view of this, Committee on Chinese Medicine and Pharmacy (CCMP), Department of Health published the first edition of Chinese Herbal Pharmacopeia to set the quality specification of TCM herbs, and ensure the consistency and efficacy of herbs to assure the public safety on the herbs used. The first edition of Chinese Herbal Pharmacopeia recorded 200 herb items. It was renamed as Traditional Taiwan Pharmacopeia in August, 2005.

To cope with the international trend and development, ensure the reproducibility of the specification in the pharmacopeia, meet the need of the herbal industry, and assure the public safety, CCMP started an overall review, appropriate correction on the first edition of Traditional Taiwan Pharmacopeia and revisions were made. The second edition of Taiwan Traditional Pharmacopeia was published. The arrangement of the second edition text refers the seventh edition of Chinese Pharmacopeia; the appendix of test methods was shifted to the front as general notice with code number for each test method. The test methods cited in the text were no longer searched in page number, only code number of the test methods was after each monograph. Pomegranate bark was removed and 101 more items were added to a total of 300 TCM herb items. The composition and indications of 200 standard TCM formulas and list of poisonous traditional Chinese herbal drugs were added in general rule. Color reactions tests which were less specific were replaced with thin-layer chromatography (TLC) and high-performance liquid chromatography (HPLC) methods. The percentage of color reaction reduced from 63% to 7%; TLC increases from 55% to 87% and HPLC increases from 18% to 35%. Due to green chemistry concern, some poisonous solvents used in TLC such as benzene, trichloromethane, and carbon tetrachloride were replaced by less poisonous solvents. Limits of total heavy metals, pesticide residue, aflatoxin, and microorganism from previous four government announcements were incorporated into the pharmacopeia. Cross Chinese-English index of reagents and solutions in the general notice were provided to facilitate the reader to search. The pharmacopeia was also renamed as Taiwan Herbal Pharmacopeia (THP).

I would like to thank the editorial committee members and sub-committee members for the hard working. Without your contribution, Taiwan Herbal Pharmacopeia could not have been completed.

The publication of this second edition of Taiwan Herbal Pharmacopeia is anxiously expected by academic and Chinese medicine communities.

Wen-Ta Chiu, MD; Ph.D. (邱文達)

Director of Health

Ministry of Health and Welfare

Executive Yuan

January, 2013

History of the Compilation of the Second Edition of Taiwan Herbal Pharmacopeia

To ensure the quality of TCM herbs, the compilation of an official standard of an herbal pharmacopeia is very important. In 1982, Committee on Chinese Medicine and Pharmacy (CCMP), Department of Health, Executive Yuan yet as a consulting organization, Chi-Hsien Chang the former chairperson of CCMP convened experts from Bureau of Food and Drug Analysis, Department of Health, Executive Yuan, China Medical College, Taipei Medical College (Now, Food and Drug Administration FDA, China Medical University, and Taipei Medical University) and Chinese Medicine experts to compile the draft of "Standards of Chinese Herbs, ROC", which was published in 1985 as a set of 4 volumes.

In 1995, CCMP was promoted from a consulting unit to administration organization. In the beginning, many TCM related issues needed to be developed. Through the support of former Directors of Health and the efforts of Chairperson of CCMP, a basic structure for the modernization and internationazation was formed with good achievement which gained domestic recognition and international reputation.

After becoming an independent administration organization, Dr. Kuan-Chung Su the first chairperson of CCMP, realizing the promotion on the consumer's awareness and the needs of herbal industry for the standardization of TCM herbs, advocated to use the modern instruments and technology to set the standard specification of TCM herbs. The subsequent former chairperson, Dr. Cheng-Kuo Chang then commissioned a project "Research on the Compilation of the Chinese Herbal Pharmacopeia" to Professor Ming-Tsun Hsieh, the president of China Medical College, Dr. Chi-Jui Wu of China Medical College and Professor Wu-Lung Wu of National Defense Medical Centre. Another project "Study on the standards establishment for quality control on Chinese crude drugs" was also commissioned to Bureau of Food and Drug Analysis, Department of Health, Executive Yuan.

As related conditions became matured, CCMP appointed Chao-Keng Lin, Che-Hui Lin, Wu-Lung Wu, Yung-Chang Wu, Chieh-Fu Chen, Chiung-Hsueh Chen, Kuo-Ching Wen, Hsing-Tso Tsai, Ming-Tsun Hsieh, and Kun-Ying Yen to form editorial committee for the compilation of herbal pharmacopeia. Many other experts from government, academic, and industry were also called to form sub-committees to help the compilation. Chinese Herbal Pharmacopeia was proclaimed on March 9, 2004, and implemented on May 1, 2004. The pharmacopeia records Chinese name,

scientific name, source, description, identification, impurities, assay, storage, usage, dosage, precaution and warning. Sulfur dioxide limit, heavy metals, and pesticide residue limit were set. The sulfur dioxide limit of chinese yam (Dioscoreae Rhizoma), ginkgo seed (Ginkgo Semen) and lily bulb (Lilii Bulbus); heavy metals limit of common bletilla tuber (Bletillae Rhizoma), eucommia bark (Eucommiae Cortex) and cinnamon bark (Cinnamomi Cortex); pesticide residue limit of senna leaf (Sennae Folium) were set in the pharmacopeia. This pharmacopeia provides quality control standards for pharmaceutical companies and the inspection units from the government to follow. In August 31, 2005, the pharmacopeia was renamed to “Traditional Taiwan Pharmacopeia.

Since 2005, CCMP has commissioned Professor Yuan-Shiun Chang, China Medical University and Associate Professor Yu-Ling Ho, Hungkung University to carry out projects on the quality control specification of traditional Chinese herbs for the chemical background information, such as 5 tests for the herbs which may be incorporated in the upcoming revised version of Chinese Herbal Pharmacopeia.

After the implementation of Chinese Herbal Pharmacopeia, some domestic pharmaceutical companies found that some of the limit requirements and determination methods do not fit with actual operations, through Taiwan Pharmaceutical Manufacture Association (TPMA), they suggested some parts to be revised. In 2007, CCMP commissioned a project “Research on the Compilation of Taiwan Herbal Pharmacopeia” to Dr. Yu-Ling Ho, Assistant Professor of Hungkung University to revise some imperfections in first edition and added 50 more Chinese herb items, and publish Traditional Taiwan Pharmacopeia second edition. But a conclusion was made in the editorial meeting, in order to make the content more complete and richen the Pharmacopeia, the total items of Chinese herbs should be increased up to 300 in the revised version.

In 2010, CCMP commissioned Professor Yuan-Shiun Chang, China Medical University to compile the second edition of Traditional Taiwan Pharmacopeia. After meetings and discussions with experts from government, academic, and industry, the first draft of Taiwan Traditional Pharmacopeia reprint was completed on November 2011. Pomegranate Bark (Granati Radicis Cortex) was removed because of seldom used and a total of 300 herb items were recorded. Besides increase of herb items, the standard of test methods is also improved. The traditional colorimetric methods were reduced from 63% to 7% due to not objective enough, TLC methods were increased from 55% to 87% and HPLC methods were increased from 18% to 35%. Limits of heavy metals, pesticide residue, aflatoxin, and microorganism from four previous government announcements were incorporated into the Pharmacopeia.

According the opinion from the domestic pharmaceutical companies to the first edition pharmacopeia, the imperfection in determination methods and poisonous solvents such as benzene, trichloromethane and carbon tetrachloride used in the tests, CCMP also commissioned Assistant Professor Chun-Pin Kao, Hsin Sheng Junior of Medical Care and Management to evaluate the chemical identification methods used in the first edition. The revised methods were also included in the new edition.

For the sake of caution, In February 2012, CCMP commissioned Professor Yuan-Shiun Chang, China Medical University for editing and publishing the second edition of Traditional Taiwan Pharmacopeia. Based on the content of 300 species in pharmacopeia draft completed in previous year, regularly editorial meetings were hold to discuss the contents. Eleven committee members from TCM section in 7th ed. of Chinese Pharmacopeia were invited as editorial panel members. The members included Peng-Hao Wang, Tien-Shang Wu, Yung-Chang Wu, Chao-Keng Lin, Che-Hui Lin, Yuan-Shiun Chang, Chieh-Fu Chen, Yi-Chao Huang, Ming-Tsun Hsieh, and Chi- Fang Lo, and Lin-Huang Huang as chairperson. To facilitate the editorial work and make it more representative, five sub-committees were established, including:

Origin source research group: Division of research and analysis of TFDA, Yu-Ling Ho, Wu-Lung Wu, Yi-Jung Li, Mei-Hsien Li, Lien-Tzu Li, Chien-Hsiung Chang, Wen-Liang Chang, Hsien-Che Chang, Hsien-Chang Chang, Chao-Lin Kuo, Pei-Yi Chen, Yi-Sheng Chen, Chiung-Hsueh Chen, Chieh-Hung Huang, Hsiu-Chin Huang, Kun-Sen Huang, Ling-Ling Yang, Jung-Chi Yang, and Mei-Kuang Lu.

Chemical analysis group: Division of research and analysis of TFDA, Meng-Hsiu Shih, Shu-Tuan Chiang, Yu-Ling Ho, Chin-Jen Wu, Shui-Sheng Li, Wei-Chu Li, Liang-Ying Chou, Li-Chun Lin, Ya-Hui Hsu, Feng-Lin Hsu, Ling Chin, Chun-Pin Kao, Kuang-Hsiung Chang, Fang-Jung Chang, Chin-Ming Chang, Chao-Lin Chang, Wu-Chang Chuang, Yao-Hao Kuo, Ya-Yi Huang, Li-Wei Huang, Cheng-Che Yang, Shu-Hung Yang, Yi-Chu Liu, Chung-Hsi Liu, Tsung-Yi Tsai, Tung-Hu Tsai, Fen-Ling Lu, Hsin-Jung Lai, and Mei-Ying Chien.

Impurities analysis group: Division of research and analysis of TFDA, Shu-Tuan Chiang, Yu-Ling Ho, Chin-Jen Wu, Wei-Chu Li, Liang-Ying Chou, Kuang-Hsiung Chang, Wu-Chang Chuang, Shih-Sung Chen, Ya-Yi Huang, Ming-Chao Tung, Tsung-Yi Tsai, Hsiu-Mei Teng, and Mei-Ying Chien.

General rules determination group: Division of research and analysis of TFDA, Shu-Tuan Chiang, Yu-Ling Ho, Chin-Jen Wu, Wei-Chu Li, Li-Chun Lin, Kuang-Hsiung Chang, Wu-Chang Chuang, Yao-Hao Kuo, Shih-Sung Chen, Ya-Yi Huang, Tsung-Yi Tsai, Mei-Ying Chien, and Yu-Jui Ku.

Comprehensive group: Jui-San Wang, Te-Ming Wang, Pu-Lin Chu, Yung-Cheng Ho, Hsiu-Ching Wu, Kuan-Han Li, Wei-Chu Li, Shu-Ping Li, Feng-Yu Li, Cheng-Pin Lin, Shu-Chiao Chiu, Chun-Chuan Shih, Yang-Chih Shih, Hsueh-Yun Chi, Mao-Feng Sun, Hsueh-Ying Hsu, Wen-Hui Kao, Shang-Te Kao, Tsui-Hsiu Kang, Heng-Hung Chang, Shao-Ching Hsu, Wang-Chuan Chen, Ping-Chi Chen, Wen-Huang Peng, Mei-Ling Yeh, Wen-Chieh Chu, Ching-Chiang Liu, Chin-Chuan Tsai, Hsien-Chang Tsai, Yu-Hsiu Cheng, Yu-Jen Cheng, Tung-Yuan Lai, Chen-Jung Lai, Tsai-Pei Hsieh, Kun-Ying Yen, Yi-Chang Su, and Hsin-Tien Su.

After nine conferences with five group members, the contents were reviewed and revised. Two hundreds standard TCM formulas were provided with original reference, ingredient herbs, effects, and indications. Poisonous Chinese herbs list was also added. English names of reagents were added. Cross Chinese–English indexes of reagents and solutions were added in indexes part, facilitate the readers for searching. Traditional Taiwan Pharmacopeia was renamed as “Taiwan Herbal Pharmacopeia (THP)” as the conclusion of Pharmacopeia conference on November 12, 2012.

The second edition of Taiwan Herbal Pharmacopeia will be proclaimed and implemented in the end of 2012. This Pharmacopeia will advance the quality of Chinese herbs, and ensure the safety of medication usage. On behalf of CCMP, I would like to show the greatest respect to the members for their hard working.

Lin-Huang Huang (黃林煌)
Chairperson
Taiwan Herbal Pharmacopeia Editorial Panel
Committee on Chinese Medicine and Pharmacy
Ministry of Health and Welfare, Executive Yuan
January, 2012

List of Editorial Members of Taiwan Herbal Pharmacopeia, Second Edition

Department of Health, Executive Yuan

Editorial Member of THP, 2nd Ed.

Chief Editor: Wen-Ta Chiu (邱文達)

Chairperson: Lin-Huang Huang (黃林煌)

Members: Peng-Hao Wang (王鵬豪), Tien-Shang Wu (吳天賞), Yung-Chang Wu (吳永昌), Chao-Keng Lin (林昭庚), Che-Hui Lin (林哲輝), Yuan-Shiun Chang (張永勳), Chieh-Fu Chen (陳介甫), Yi-Chao Huang (黃怡超), Ming-Tsun Hsieh (謝明村), and Chi-Fang Lo (羅吉方)

Sub-Committee Editorial Members of THP, 2nd Ed.

Origin Source Research group: Division of research and analysis of TFDA, Yu-Ling Ho (何玉鈴), Wu-Lung Wu (吳午龍), Yi-Jung Li (李宜融), Mei-Hsien Li (李美賢), Lien-Tzu Li (李連滋), Chien-Hsiung Chang (張建雄), Wen-Liang Chang (張溫良), Hsien-Che Chang (張賢哲), Hsien-Chang Chang (張憲昌), Chao-Lin Kuo (郭昭麟), Pei-Yi Chen (陳佩儀), Yi-Sheng Chen (陳益昇), Chiung-Hsueh Chen (陳瓊雪), Chieh-Hung Huang (黃介宏), Hsiu-Chin Huang (黃秀琴), Kun-Sen Huang (黃坤森), Ling-Ling Yang (楊玲玲), Jung-Chi Yang (楊榮季), and Mei-Kuang Lu (盧美光).

Chemical Analysis group: Division of research and analysis of TFDA, Meng-Hsiu Shih (史盟秀), Shu-Tuan Chiang (江淑端), Yu-Ling Ho (何玉鈴), Chin-Jen Wu (吳晉任), Shui-Sheng Li (李水盛), Wei-Chu Li (李威著), Liang-Ying Chou (周良穎), Li-Chun Lin (林麗純), Ya-Hui Hsu (徐雅慧), Feng-Lin Hsu (徐鳳麟), Ling Chin (秦玲), Chun-Pin Kao (高駿彬), Kuang-Hsiung Chang (張光雄), Fang-Jung Chang (張芳榮), Chin-Ming Chang (張金鳴), Chao-Lin Chang (張朝霖), Wu-Chang Chuang (莊武璋), Yao-Hao Kuo (郭曜豪), Ya-Yi Huang (黃雅翌), Li-Wei Huang (黃禮偉), Cheng-Che Yang (楊政哲), Shu-Hung Yang (楊曙鴻), Yi-Chu Liu (劉宜祝), Chung-Hsi Liu (劉崇喜), Tsung-Yi Tsai (蔡宗義), Tung-Hu Tsai (蔡東湖), Fen-Ling Lu (盧芬鈴), Hsin-Jung Lai (賴信榮), and Mei-Ying Chien (簡美英).

Impurities Analysis group: Division of research and analysis of TFDA, Shu-Tuan Chiang (江淑端), Yu-Ling Ho (何玉鈴), Chin-Jen Wu (吳晉任), Wei-Chu Li (李威著), Liang-Ying Chou (周良穎), Kuang-Hsiung Chang (張光雄), Wu-Chang Chuang (莊武璋), Shih-Sung Chen (陳石松), Ya-Yi Huang (黃雅翌), Ming-Chao Tung (董明兆), Tsung-Yi Tsai (蔡宗義), Hsiu-Mei Teng (鄧秀玫), and Mei-Ying Chien (簡美英).

General rules Determination: Division of research and analysis of TFDA, Shu-Tuan Chiang (江淑端), Yu-Ling Ho (何玉鈴), Chin-Jen Wu (吳晉任), Wei-Chu Li (李威著), Li-Chun Lin (林麗純), Kuang-Hsiung Chang (張光雄), Wu-Chang Chuang (莊武璋), Yao-Hao Kuo (郭曜豪), Shih-Sung Chen (陳石松), Ya-Yi Huang (黃雅翌), Tsung-Yi Tsai (蔡宗義), Mei-Ying Chien (簡美英), and Yu-Jui Ku (顧祐瑞).

Comprehensive group: Jui-San Wang (王瑞叁), Te-Ming Wang (王德銘), Pu-Lin Chu (朱溥霖), Yung-Cheng Ho (何永成), Hsiu-Ching Wu (吳琇卿), Kuan-Han Li (李冠漢), Wei-Chu Li (李威著), Shu-Ping Li (李蜀平), Feng-Yu Li (李豐裕), Cheng-Pin Lin (林承斌), Shu-Chiao Chiu (邱淑嬌), Chun-Chuan Shih (施純全), Yang-Chih Shih (施養志), Hsueh-Yun Chi (紀雪雲), Mao-Feng Sun (孫茂峰), Hsueh-Ying Hsu (徐雪瑩), Wen-Hui Kao (高文惠), Shang-Te Kao (高尚德), Tsui-Hsiu Kang (康翠秀), Heng-Hung Chang (張恒鴻), Shao-Ching Hsu (許紹菁), Wang-Chuan Chen (陳旺全), Ping-Chi Chen (陳聘琪), Wen-Huang Peng (彭文煌), Mei-Ling Yeh (葉美玲), Wen-Chieh Chu (褚文杰), Ching-Chiang Liu (劉靜江), Chin-Chuan Tsai (蔡金川), Hsien-Chang Tsai (蔡憲璋), Yu-Hsiu Cheng (鄭育修), Yu-Jen Cheng (鄭喻仁), Tung-Yuan Lai (賴東淵), Chen-Jung Lai (賴振榕), Tsai-Pei Hsieh (謝采蓓), Kun-Ying Yen (顏焜熒), Yi-Chang Su (蘇奕彰), and Hsin-Tien Su (蘇新田).

CONTENTS

Forewords from the PIs ..... i~ii

Preface ..... iii~iv

History of Taiwan Herbal Pharmacopeia ..... v~viii

List of Editorial Members ..... ix~x

General Notices ..... xi~xii

General Rules Lists xiii

General Rules ..... (1)~(137)

Official Names Lists ..... xv~xviii

Monographs ..... 1~283

Indexes ..... 285~315

Ministry of Health and Welfare
衛生福利部

General Notices

Name: The full title of this publication is Taiwan Herbal Pharmacopeia THP. After the pharmacopeia is official promulgated, the text of Taiwan Herbal Pharmacopeia refers to this second edition of Taiwan Herbal Pharmacopeia.

Content: Official text in THP includes general rules and monographs. The monographs describe the crude drugs which are statutory are used for prevention and diagnosed the diseases. The general rules include physical properties, determination tests, identification tests, general determinations, general requirements and rules for preparations, identifications of crude drugs, determinations of biological products, special determinations, potency assays (bioassays), reagents and test solutions, appliances and apparatus, a list of poisonous Chinese herbs and 200 standard Traditional Chinese Medicine (TCM) formulas.

Statutory crude drugs:

1. The crude drugs recorded in monographs should comply with pharmacopeia identity standards before manufacturing, selling, and dispensing for medical treatment and health care.
2. The crude drugs recorded in monographs are arranged in alphabetical order of official names. Indexes of Chinese names, names in Tongyong pinyin form, names in Hanyu pinyin form, English names and scientific names are arranged alphabetically.
3. The monograph for each crude drug is arranged in the following order:
   (1) Official name
   (2) Chinese name
   (3) Name in Tongyong pinyin form / Names in Hanyu pinyin form
   (4) English name
   (5) Source
   (6) Limits of the content
   (7) Description
   (8) Identification
   (9) Impurities and other requirements
   (10) Assay
   (11) Storage
   (12) Usage
   (13) Dosage
   (14) Precaution and warning
4. Scientific names, family names and the used parts of the botanical or zoological origin of the crude drugs cited in monographs are recoded. Most of the family names of plants have -aceae as suffix except the following eight old descriptive family names to be used as synonyms as follows:
   (1) Compositae = Asteraceae
   (2) Umbelliferae = Apiaceae
   (3) Labiatae = Lamiaceae
   (4) Gramineae = Poaceae
   (5) Palmae = Arecaceae
   (6) Cruciferae = Brassicaceae
   (7) Leguminosae = Fabaceae
   (8) Guttiferae = Clusiaceae/ Hypericaceae
5. Unless otherwise directed, all crude drugs should be used in dried form. The crude drugs should be dried at the temperature below 60℃. Those crude drugs that contain volatile oils should be dried at the room temperature (as air drying as an example) or at a low temperature to avoid volatilization of volatile oils.
6. Crude drugs should not be adulterated and contaminated with pathogenic microorganisms, insects, residues or secretions from other animals, or other analogous crude drug. More, the crude drugs are not adulterated with poisonous crude drugs. The color and odor of crude drugs should be pure. The crude drugs should not be viscous, mildewing and corrupt.
7. All crude drugs should be stored with special care. To prevent insect breeding and extend the storage period, except bulky herbs, crude drugs can be preserved in well closed containers and fumigated with fumigants that are harmless to humans, easily volatile at room temperature, not affect the therapeutic effects of crude drugs and the results of tests. Crude drugs should not be sprayed with pesticides.
8. Unless otherwise directed, inorganic substances adhering on the crude drugs, after identified as acid-insoluble ash should not exceed 2% of the weight of crude drug.
9. The purposes of processing crude drugs includes: clean, reduce toxicity, transition the properties, enhance the therapeutic effects, prevent deterioration, and facilitate storage. Based on the needs of medical treatment, dispensing, and pharmaceutical preparation. The process is enhanced the effects of crude drugs in prevention and treatment of diseases.

Units of measurement: The units of measurement employed in this pharmacopeia are the metric system which is a legal system of Republic of China. Metric units include meter, kilogram, liter, etc. Micrometer (μm) is one millionth (10^{-6}) of a meter; microgram (μg) is one millionth (10^{-6}) of a gram; microliter (μL) is one millionth of a liter. The symbols of units of measurement are listed as follows:

m: meter dm: decimeter
cm: centimeter mm: millimeter
μm: micrometer (μm = 10^{-6} m; millionth meter)
nm: nanometer (nm = 10^{-9} m; millionth millimeter)
kg: kilogram g: gram mg: milligram
μg: microgram (μg = 10^{-6} g; millionth gram)
L: liter mL: milliliter
μL: microliter (10^{-6} L; millionth liter)

Concentration and characters of solution:

1. The symbol "%" is used for the expression of weight percentage. % (w/w) expresses the grams of a solute in 100 g of solution. % (w/v) expresses the grams of a solute in 100 mL of solution. % (v/v)

expresses the milliliters of a solute in 100 mL of solution.

2. The quantity in each clause, unless otherwise specified, solid refers to weight and liquid refers to volume. “ppm” is the abbreviation of part per million, refers to the impurities proportion by weight.
3. All unspecified solvents in the text are aqueous solution.
4. The expression “ (1 in 10)” or “ (1 in 20)” stated under the solution refers to dissolve 1.0 g or 1.0 mL of solute or liquid in sufficient amount of solvents to make up to 10 mL or 20 mL. For the liquid mixture, an expression such as “(10:20:30)” means the respective parts of volume ratio.
5. Unless otherwise directed, all acidity or alkalinity tests of solutions refer to the results of litmus paper tests.
6. All unspecified water used in the tests and assays are distilled water.

Temperature: The unit of specified temperature in this pharmacopoeia is Celsius (℃). Unless otherwise directed, the temperature is 25℃ when measuring the volumes. Normal temperature refers to 15~30℃, slightly warm refers to 30~40℃. If there has no specified on the water bath temperature, the temperature is same as boiled water (about 100℃).

Constant weight: Constant weight refers to the drying or ignition of 1.0 g substance or material in two consecutive weights with a difference not exceeding 0.5 mg. The second and subsequent weighing is made after an additional hour of drying or after another 15 minutes of ignition.

Description: Describe the form of general characters, tissues and powders of crude drugs.

Identifications: Besides all crude drugs identification methods listed in this pharmacopeia, if necessary, other methods not mentioned in this pharmacopeia can also be applied.

Reference drugs and reference standards: Reference drugs and reference standard refers to the standard materials used for identifications and assays. All standard materials should include instruction, batch number, usage, expiry date, storage condition and content.

Assays, impurities and other requirements:

1. All assays, impurities and other requirements listed in this pharmacopeia are official and can be used to set the standards of the crude drugs. If there have other methods whose accuracy is same as the methods described in the pharmacopeia, it is available as alternative methods. In case of legal disputes, the methods from pharmacopoeia should be priority.
2. For the limit requirement, a statement “not less than 100.0%” refers to 100.0% and above. A statement “95.0%~105.0%” refers to range between 95.0%~105.0%. In data of test results, the last effective figure after the significant decimal should be rounded, as the basis for determination.
3. All assays should be calculated on the dry weight basis.
4. The sample quantities for assays, impurities and other requirements must be measured and weighed accurately according to the rules. The measuring quantities can be little different from the specified, but the difference should not exceed ±10%.
5. “Impurities” refers to foreign matter adulterated with herbal drugs during the processing. If the general impurity check methods are employed, only the maximum allowable limit is given, otherwise, both limit and impurity check methods should be specified. All impurities which should not be adulterated can’t be contained in the drugs.
6. Please refer to the general notice of Chinese Pharmacopeia (7th Edition) for further information.

Storage: Storage method in this pharmacopeia refers to the basic conditions for storage and preservation of crude drugs.

1. Containers are the vessels which storage the crude drugs and contact with the crude drugs directly. The containers should not affect the quality of the contents.
2. “Well closed container” refers to containers that protects the contents from loss and adulterating with other solid matters during processing and storage.
3. “Cool place” refers to the storage temperature below 20℃. “Cold place” refers to the storage temperature between 2℃~8℃. Unless otherwise directed, the storage temperature refers to room temperature.

Usage: According to clinical medicine in TCM, the major grouped indications of the crude drugs are given. It is only provided as a reference. The detailed clinical efficacy and multiple usages are not listed.

Dosage: The daily dose of decoction or powder for an adult.

Precautions: the crude drugs have poisonous side effect, which can be distinguished and avoided the side effect.

General Rules of Taiwan Herbal Pharmacopeia

I. Physical Properties and Determination Tests (1)

(1001) Determination of Congealing Temperature .....(1)

(1002) Determination of Melting Temperature ...(1)

(1003) Determination of Boiling Point or Distilling Range .....(2)

(1005) Determination of Specific Gravity.....(3)

(1006) Determination of Refractive Index .....(3)

(1007) Determination of Optical Rotation .....(3)

(1008) Determination of Spectrophotometry .....(4)

(1009) Determination of pH Value .....(6)

(1010) Chromatography .....(8)

(1015) Determination of Fineness Degree of Powders.....(13)

II. Identification Tests (14)

(2001) General Identification Tests .....(14)

(2002) Thin Layer Chromatographic Identification Test.....(16)

III. General Determinations (16)

(3001) Determination of Loss on Drying .....(16)

(3002) Determination of Residue on Ignition ...(16)

(3003) Determination of Chlorides and Sulfates .....(16)

(3005) Determination of Total Heavy Metals....(17)

(3006) Determination of Arsenic (As).....(19)

(3007) Determination of Lead (Pb) .....(20)

(3010) Determination of Water Content .....(21)

(3033) Determination of General Impurities .....(22)

(3049) Determination of Inductively Coupled Plasma (ICP) .....(24)

(3050) Determination of Atomic Absorption Spectrometry (AAS) .....(25)

(3051) Determination of Residue of Sulfur Dioxide.....(27)

(3052) Determination of Pesticides Residues....(27)

(3053) Determination of Aflatoxins (Mycotoxins) .....(28)

IV. General Requirements and Rules for Preparations(29)

V. Identifications of Crude Drugs (29)

(5001) Sampling ..... (29)

(5002) Processing ..... (29)

(5003) Determination of Foreign Matter ..... (29)

(5004) Determination of Ash ..... (30)

(5005) Determination of Water Content ..... (30)

(5006) Determination of Extractives ..... (30)

(5007) Determination of Volatile Oil..... (31)

(5008) Determination of Loss on Drying ..... (31)

(5009) Determination of Swelling Capacity..... (31)

(5010) Microscopic Identification ..... (32)

VI. Determinations of Biological Products (36)

VII. Special Determinations (36)

(7005) Microbial Limit Test ..... (36)

(7006) Total Aerobic Microbial, Yeasts and Molds Count..... (41)

(7007) Contamination Determination of Microorganism ..... (42)

VIII. Potency Assays (Bioassays) (43)

IX. Reagents and Test Solutions (43)

(9001) Reagents..... (44)

(9002) Test Solutions (TS) ..... (75)

(9003) Indicators ..... (78)

(9004) Indicator Test Papers..... (79)

(9005) Colorimetric Solutions (CS) ..... (79)

(9006) Volumetric Solutions (VS) ..... (79)

X. Appliances and Apparatus (81)

XI. List of Poisonous Chinese Materia Medica (82)

XII. 200 Standard TCM Formulas (83)

Ministry of Health and Welfare
衛生福利部

I. Physical Properties and Determination Tests

(1001) Determination of Congealing Temperature

The temperature at which a substance transfers from the liquid to the solid state upon cooling is called the congealing temperature. All unspecified method in the monograph refers to the method described below.

Apparatus: Set an apparatus similar to illustrated, in which the container for the substance is a 2.5 × 10 cm test tube, with a suitable, short-range thermometer suspended in the center, and a wire stirrer, about 30 cm long, bent at its lower end into a horizontal loop. The specimen container is supported, by means of a cork, in a suitable water-tight cylinder about 5 cm in internal diameter and 11 cm in length. The cylinder, in turn, is supported in a suitable bath sufficient to provide not less than a 3.7 cm layer surrounding the sides and bottom of the cylinder. The outside bath is with a suitable thermometer.

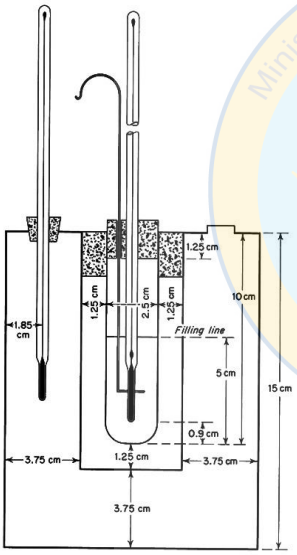

Congealing Temperature Apparatus

Procedure: Melt solid substances at a temperature not exceeding 20℃ above its expected congealing point, and pour into the test tube to a height about 5 cm. Immerse the bulb of the test tube thermometer in the halfway between the top and bottom of the specimen in the test tube. Fill the bath to about 1.2 cm from the top to the surface of the liquid, the temperature is 4~5℃ below the expected congealing point. When the test specimen has cooled to about 5℃ above its expected congealing point, adjust the temperature of bath to 7~8℃ below the expected congealing point. Stir the specimen continuously by moving the loop up and down with the stirrer, at a regular rate of 20 complete cycles per minute, stir continuously till the end of measurement. Record the reading of the test tube thermometer every 30 seconds. Continue stirring only as long as the temperature is gradually falling, stopping when the temperature becomes constant or starts to rise slightly. Continue recording the temperature in the test tube every 30 seconds after the temperature begins to fall again after remaining constant. Supercooling may cause deviation from the normal pattern of temperature changes. If it occurs, repeat the test by introducing small solid particles of the test specimen on the temperature approaches 1℃ intervals as the expected congealing point, induce the test specimen congealing. When the temperature starts to fall from the constant, record the temperature of the test specimen every 30 seconds for 3 minutes, if the difference between four consecutive readings is less than 0.2℃, take the average of the four consecutive readings as congealing temperature.

In case the substance is a liquid at room temperature, carry out the determination using a bath temperature about 10~15℃ below the expected congealing point. Congelation may be induced by rubbing the inner walls of the test tube with the thermometer, or by introducing a small fragment of the previously congealed substance. Stop stirring once the substance starts to congeal and record the temperature in the test tube every 5~10 seconds until it reaches the highest temperature and remain constant for 1 minute. The constant temperature recorded is the congealing temperature of the substance.

(1002) Determination of Melting Temperature

The melting temperature of a solid is defined as the temperature the solid coalesces and is completely melted. There are different melting temperatures for different pure substances. Three classes of the determination to determine melting range or temperature are given herein, varying in accordance with the nature of the substance.

Class I: For pulverizable solid substances.

Apparatus:

1. One of the hard glass containers described below
   (1) A glass container with one end open and the other end circled to a center ring
   (2) A glass container with a stirring device
   (3) Other suitable containers
2. An accurate thermometer
3. One of the heating bath described below
   (1) Light liquid paraffin
   (2) Water
   (3) Clear silicone oil with low viscosity (50~100 mm2/s)
   (4) Other suitable heat transfer liquid
4. A hard capillary glass tube with one end sealed is about 10 cm long and 0.8~1.2 mm in internal. The thickness of walls is 0.2~0.3 mm .
5. The heat may be supplied by an open flame or electricity.

Procedure: unless otherwise directed, follow the procedure below. Mill the substance to a very fine powder, render it anhydrous when it contains water of hydration by drying it at the temperature specified in the

monograph, when the substance contains no water of hydration, dried it in a suitable desiccator for not less than 16 hours.

Place a sufficient amount of the dry powder to form a column in the bottom of the tube 2.5~3.5 mm high when packed down as closely as possible by moderately tapping on a solid surface. Attach the test tube to the thermometer by wetting both with a drop of the liquid from the bath or fastening by platinum wires, and adjust its height so that the position of the test specimen in the test tube is at the middle of the thermometer bulb. Heat the bath until the temperature is about 10℃ below the expected melting point. Place the thermometer in the bath, and continue the heating, with constant stirring, the temperature rise at a rate about 3℃ per minute. When the temperature is about 3℃ below the expected melting, adjust the temperature rises at a rate of about 1℃ per minute. Continue heating until melting is completed. The temperature at which the test specimen is observed to collapse against the side of the tube at any point is defined as the beginning of melting, and the temperature at which the test substance becomes liquid completely is defined as the end of melting or the "melting point." The two temperatures are within the limits of the melting temperature.

Class II: For substances are not easy to pulverizable such as fats, fatty acids or waxes. Water is selected as the bath fluid.

Procedure: Melt the material to be tested at as low temperature as possible, and draw it into a capillary tube, which is open at both ends, to a depth about 10 mm. Cool the charged tube at 10℃, or lower, for 24 hours, or in contact with ice for at least 2 hours. Then attach the tube to the thermometer by suitable means, adjust it in a water bath so that the upper edge of the material is 10 mm below the water level, and heat as directed of Class Ⅰ, within 5℃ of the expected melting temperature, to regulate the rate of temperature rise to 0.5~1.0℃ per minute. The temperature at which the material is observed to rise in the capillary tube is the melting temperature.

Class III: For soft paraffin.

Procedure: Melt a quantity of the test substance slowly, while stirring, until it reaches the temperature of 90~92℃. Remove the source of the heat and allow the molten substance to cool to the temperature of 8~10℃ above the expected melting point. Chill the bulb of a suitable thermometer to 5℃, wipe it dry and dip it into the molten substance that approximately the half of the bulb is submerged while it is still cold. Withdraw the thermometer immediately, and hold it vertically away from the heat, until the wax surface dulls, then dip it into a water bath whose temperature is not higher than 16℃ for 5 minutes. Fix the thermometer securely in the test tube by a cork, the lower point is 15 mm above the bottom of the test tube. Suspend the test tube in a water bath adjusted to about 16℃, and raise the temperature of the bath at the rate of 2℃ per minute to 30℃, then change to a rate of 1℃ per minute, and record the temperature at which the first drop of melted substance leaves the thermometer. Repeat the determination twice on a freshly melted portion of the test substance. If the variation of three determinations is less than 1℃, take the average of the three as the melting temperature. If the variation of three determinations is 1℃ or greater than 1℃, make two additional determinations, and take the average of five determinations as the melting temperature.

(1003) Determination of Boiling Point or Distilling Range

The boiling point is the certain temperature when the vapor pressure of a liquid is equal to 760 mmHg. To determine the distilling range of temperatures within which an official liquid distills, or the percentage of the material that distills between two specified temperatures. The lower limit of the range is the temperature indicated by the thermometer when the first drop of condensate leaves the tip of the condenser. The upper limit is the dry point, the temperature at which the last drop of liquid evaporates from the lowest point in the distillation flask, without consider to any liquid remaining on the side of the flask. Two ways of distilling range determination described below.

Method I: Unless otherwise directed, this method is applied to the liquid with a boiling range of 5℃ or less.

Apparatus: Take the distilling flask which is 50~60-mL capacity and 100~120 mm total length, and 14~16 mm inside diameter, place in the center hole of an asbestos plate, which is in the form of a square with sides of 120~150 mm, 3~5 mm in thickness, and with a perforation 30 mm in diameter in the center, the side of the bottle must be fitted to the hole tightly, put on the tripod. A side-arm is on the midway of the neck, it is 100~120 mm length and 4~5 mm in internal diameter, which forms an angle about 70~75° by the side-arm and the neck. The thermometer is located in the center of the neck, the bulb should be match the position in the middle of the side tube open, and the side-arm of distilling flask connected with a straight glass condenser, with a water jacket about 400~600 mm in length, the top of the jacket to the neck of the bottle is about 180~250 mm in length. For liquid which distilling range is below 80℃, connect the condenser and the receiver through a delivery tube, insert another delivery tube into stopper of the receiver, which has a small hole to let the air discharge. The receiver is cooled by cool water during distillation.

Procedure: Pour 25 mL of test specimen into the distillation flask, add several zeolites, insert the thermometer and apply heat, regulate the heat power so that the distillation is at a rate of 3~5 mL of distillate per minute, collecting the distillate in the receiver. Record

the temperature when the first drop of distillate falls from the condenser, and the last drop of liquid evaporates from the bottom of the flask or when the specified percentage of the test specimen has distilled over. Correct the observed temperature readings from any variation in the atmospheric pressure, the normal atmospheric pressure is 760 mmHg, by reducing or adding 0.1℃every 2.7 mmHg increase or decrease of the pressure. If necessary, use auxiliary thermometer, corrected errors by the following formula.

$$0.00015\times N\,(T—t)$$

N: degree of the mercury column above the bottle stopper.
T: temperature of distillation.
t: temperature of auxiliary thermometer.

The mercury ball of auxiliary thermometer should be at the middle part between the highest position of boiling temperature and the bottom of the cork. Add the calibrated value with the measured temperature, and get the calibration temperature.

Method II: The method is applied to the liquid with boiling range above 5℃.

Apparatus: Use apparatus similar to that specified for Method Ⅰ, except that the distilling flask is of 200-mL capacity, and the internal diameter of the neck is 18~24 mm and the side-arm internal diameter is 5~6 mm, an asbestos plate which has a perforation of 50 mm in diameter, a cork stopper of the side-arm which inserts condenser is 25~35 mm in the diameter.

Procedure: Take 100 mL of test specimen by 100-mL cylinder, pour it into the distillation flask and measure the temperature. The cylinder does not need to clean and can be used as receiver. If the distillation temperature of the test specimen is under 80℃, it should be cooled to 20~25℃, and measure the volume. Collect the distillate at specified temperature, adjust the temperature to be the same as test solution, and measure the volume. Read the pressure from barometer and correct the temperature. If necessary, apply the auxiliary thermometer to correct the temperature with the formula.

(1005) Determination of Specific Gravity

The specific gravity is the ratio of the weight of a liquid in air at the specified temperature to that of an equal volume of water at the same temperature, unless otherwise directed, the specified temperature is 25℃, expressed as d^{25}_{25}. The specific gravity determination is only applicable to liquids. To solid form from liquids at 25℃, follow the individual monograph to test and contrast with water at 25℃.

Procedure: Select a clean, dry pycnometer that previously has been calibrated by determining its weight, and the weight of recently boiled water contained in it at 25℃. Adjust the temperature of the water to about 20℃, and fill the pycnometer with it, place the pycnometer in a water bath maintained at 25℃ for 30 minutes. Wipe off the excess water and adjust the water surface on the pycnometer scale.

Take the pycnometer from the water bath, wipe the pycnometer and weigh. Pour out the water from the pycnometer and rinse several times with ethanol, then ethyl ether, wait the pycnometer to dryness, and then add the test specimen in it. Determine the weight of test specimen as described. The specific gravity of the test specimen at 25℃ is the weight of the test specimen divided by the weight of water.

(1006) Determination of Refractive Index

Refraction takes place when a beam of light is transmitted from the first substance into the second one, due to the velocity of light changes in different substance. The refractive index (*n*) of a substance is the ratio of the velocity of light in air to the velocity of light in the substance. The refractive index may also be defined as the ratio of the sine of the angle of incidence to the sine of the angle of refraction. It is valuable in the identification of substances and the detection of impurities.

Although the standard temperature for Pharmacopeia measurement is 25℃, most of the temperature for refractive index is 20℃, the temperature should be carefully adjusted and maintained, since the refractive index varies significantly with temperature. The wavelength of incident light also affects the results. The values for refractive index given in this Pharmacopeia are for the D line of sodium (doublet at 589.0 nm and 589.6 nm). Most instruments available are designed for use with white light but are calibrated to give the refractive index in terms of the D line of sodium light.
To achieve the theoretical accuracy of ±0.0001, it is necessary to calibrate the instrument against a standard provided by the manufacturer and to check frequently the temperature control and cleanliness of the instrument by determining the refractive index of distilled water, which is 1.3330 at 20℃ and 1.3325 at 25℃. The Abbé refractometer is usually used for the refractive index to those Pharmacopeia materials with such values. Other refractometers with the same or greater accuracy may be employed. Take three readings and use the average value as the refractive index for the specimen.

(1007) Determination of Optical Rotation

When polarized light passes though the pharmaceutical substances or solution of compounds, the plane of polarized light rotate clockwise or counterclockwise, called optical active. The substance which is optically active is called chiral. The strength of optical rotation is

expressed in degree, which is called specific rotation. Optical rotation is considered to be positive (+) for dextrorotatory substances and negative (-) for levorotatory substance. The optical rotation of substances remain constant, therefore the measurement of specific optical rotation may be used for an identification test, a purity test or determined the contents.

Procedure: Measure optical rotation with a calibrated polarimeter which is accurately to 0.02° at least, to 0.01° optimal. There are two types of the polarimeter length tube which are 200 mm and 100 mm.

Determine the zero point of the instrument at specified temperature. If the test specimen is liquid, use the reservoir tube to calibrate the zero point. If the test specimen is solid, take the tube which is filled with solvent to calibrate it.

Fill the reservoir tube with test specimen at indicated temperature, use sodium lamp as the light source in the dark and observe the optical rotation. Carry out five measurements at least, take the average and calculate the specific optical rotation from one of the following equations:

For liquids $[\alpha]_D^t = \frac{\alpha}{ld}$

For solid $[\alpha]_D^t = \frac{100a}{lpd}$ or $= \frac{100a}{lc}$

α: specific rotation.
D: D-line of the sodium lamp.
t: temperature.
a: observed rotation in degrees.
l: reservoir tube in decimeters.
c: concentration of solute in g per 100 mL.
d: specific gravity of the liquid.
p: weight of solute (g) per 100 g.

(1008) Determination of Spectrophotometry

Spectrophotometry is the determination of the monochromatic radiation absorption by the substance. The monochromatic radiation obtained from the spectrophotometer refers to the electromagnetic radiation in the specified narrow wavelength range. The electromagnetic radiation with different wavelength includes: UV light (185~380 nm), visible light (380~780 nm), the NIR (780~3,000 nm) and the IR (3~40 μm).

When monochromatic radiation passes through a medium, the intensity of the transmitted light is determined by the intensity of the incident light, wavelength, characteristic of light absorbing molecule or ion, concentration, and optical path (the distance of the radiation pass through the medium). The ratio of the intensity of the transmitted radiation (I) and the intensity of the incident radiation (I_0) is called transmittance (T). The logarithm to base 10 of the reciprocal of the transmittance is called absorbance (A).

$$T = \frac{I}{I_0} \qquad A = -\log T$$

For many pharmaceutical substances, determine the absorbance in the wavelength between UV and visible light regions, the solutions are often be observed in 1 cm cells, the concentrations about 10 μg per mL of the specimen can produce the appropriate absorbance (0.2~0.8), in the IR and NIR, the cell lengths is 0.01~3 mm, concentration is 1~10 mg per mL, sometimes up to 100 mg per mL to produce sufficient absorption.

I. Ultraviolet and visible spectrophotometry

For many pharmaceutical substances, measurements made in the UV and visible light regions have greater sensitivity than in the NIR and IR. By Beer's law, if the wavelength of monochromatic radiation and the solute which absorbs the radiation in medium are constant, the absorbance (A) is proportional to the optical path (l) and the concentration (c) of the substance in solution in accordance with the equation:

$$A = klc$$

k is called extinction coefficient, is a constant when the wavelength, the solvent, and the solute is regular, the value is determined by the optical path and the concentration.

1. a is defined as absorbance, a constant when the pathlength expressed in *cm* and the concentration expressed in *g/l*.

$$a = \frac{A}{lc}$$

2. $E_{1cm}^{1\%}$ is a constant when the path expressed in cm and the concentration of the substance expressed in *% (w/v)*.
3. ε is molar absorptivity when the optical path path expressed in cm and the concentration of the substance expressed in *M/l*.

Applications:

1. Extinction coefficient is related to solutes chemical structure and wavelength. By Beer's Law, determine the absorbance of a test solution under various wavelengths of lights under the specified optical path and concentration, plot absorption spectrum, i.e. absorbance-wavelength, transmittance-wavelength, transmittance-wave number, the ratio by calculating two specified absorbance wavelength, or calculate the absorbance of test solution at specified wavelength. The data described above can compare with the result of reference standard solution. This method can be applied for identification of drugs and impurities.
2. Extinction coefficient is a constant at specified solute, solvent and wavelength. By Beer's Law, determine the absorbance of the solution with specified wavelength and the tube which has specified optical path. Calculate the concentration

of solute in the solution. This method is used for quantitative analysis.

3. If Beer's Law does not apply, determine the absorbance of various concentrations of reference standard solution at specified wavelength, plot a reference standard curve. Determine the absorption of test solution as the method above, and calculate the concentration of test solution by the standard curve. This method can be applied for quantitative analysis.

Apparatus: The basic principle of the instrument is monochromatic light passing through a test specimen in suitable form, and measuring the intensity of the transmitted light. The apparatus contain light source, monochromator, cuvette and photometer or other measuring apparatus. The polychromatic radiation produced from light source passes through the splitter and the selector to obtain monochromatic light. When monochromatic light passes through the cuvette filled with test specimen, part of the light energy is absorbed by the test solution, the transmittance or the absorbance is determined by photometer.

Before using, adjust the selector to formulate wavelength, turn off the shutter and then adjust the dark current to zero. Fill a cuvette with solvent as blank, place in the optical path, turn on the shutter, and adjust the absorbance to zero or the transmittance is 100%. Replace the blank with a cuvette filled with sample solution, place it in the optical path, and read the absorbance.

Before operating, the graduation of the instrument should be checked, calibrate if necessary. The calibration of the graduations of the spectrophotometer in UV-visible band can use the mercury-quartz lamp (arc tube mercury lamp) (253.7 nm, 302.25 nm, 313.16 nm, 365.48 nm, 404.66 nm, 435.83 nm), the hydrogen lamp (486.13 nm, 656.28 nm), didymium glass filter or holmium glass filter.

To calibrate the absorbance or the graduations of transmittance, use standard inorganic glass filter or a standard solution of known transmittances such as potassium chromate solution, potassium dichromate solution, etc.

Compare the absorbance of the test solution and the standard solution in quantification, and select the maximum absorption wavelength in the absorption spectrum. Recalibrate the instrument if the max absorption is different more than ±1 nm from the wavelength specified in the individual monograph.

Test preparation: Prepare the test solution as specified in the individual monograph. For standard solution and blank solution, use the same batch of solvent which does not contain impurities absorbing light on the test wavelength for test solution. Specified purity of solvent for spectrophotometer is preferred. Many solvents are suitable, including water, alcohols, chloroform, low molecular hydrocarbons, ethers, and dilute solution of strong acids and alkalis.

II. Infrared spectrophotometry

The absorption of the infrared light which passes through the test specimen changes with wavelength (wave-number), recorded in coordinate, which is called infrared absorption spectrum. The ordinate of the absorption spectrum is percentage of transmittance (or absorbance), the abscissa is wave-number (or wavelength).

The infrared absorption spectrum of the test specimen is different from the variety of chemical structures. The IR spectrum is unique to any given chemical compound except the optical isomers, which have identical spectra. Infrared spectrophotometry is applied to the identification of the compound and the determination of the quantity.

Apparatus: First follow the manual to adjust the spectrophotometer before using the double beam IR spectrophotometer. The reproducibility of the transmittance is no more than ±0.5%, the reproducibility of the wave-number near the 3000 cm^{-1} is no more than ±5 cm^{-1}, near the 1000 cm^{-1} is no more than ±1 cm^{-1}. The wave-number scale of an infrared spectrophotometer may be calibrated by using a polystyrene film at the absorption peaks 3060 cm^{-1}, 1601 cm^{-1}, 1029 cm^{-1}, and 907 cm^{-1}.

Procedure: The concentration of the test specimen which has the transmittance at the range 20%~80% is optimum. The usual cuvette substance is sodium chloride, potassium bromide, and thallium bromide/iodide. No solvent is completely transparent in the NIR and IR spectrum. Carbon tetrachloride is practically transparent from the wavelength of NIR to 6 μm. Carbon disulfide is the suitable solvent from the wavelength of NIR to 40 μm with the exception at the 4.2~5.0 μm and the 5.5~7.5 μm. An additional qualification for a suitable solvent is that it must not affect the material, of which the cuvette is made. When no suitable solvent is applicable, use other methods to prepare the test solution. For example, potassium bromide pellet method, solution method, paste method, film method, gas sampling method. When polymorphism compounds of one substance tested in the solid state shows variations in the IR spectra, then choose the suitable solvent, dissolve the test substance and the standard respectively, evaporate to dryness, and produce the residue. Test and get the absorption spectrum of the residues.

1. Potassium bromide pellet method: Powder 1~2 mg of a solid test specimen in an agate mortar, mix well and rapidly with 100~200 mg of potassium bromide which is for infrared spectrophotometry used, careful not to absorb moisture, and compress the mixture with a tablet machine, reduce the atmospheric pressure below 5

mmHg, apply the machine pressure at 5000~10000 kg/cm^2 for 5 to 8 minutes to make the pellet and test.

2. Solution method: Prepare test solution, unless otherwise directed in the monograph, use appropriate solvent to make the solutions with suitable concentrations (usually 5%~10% at 0.1 mm to 0.2 mm optical path). Fill in the cuvette, measure with solvent as blank.
3. Paste method: Powder 2~5 mg of a solid specimen in an agate mortar, triturate and mix the specimen with a small amount of liquid paraffin which is for infrared spectrophotometry used, produce a homogeneous paste. After spreading the paste on the center of an optical plate, place another optical plate on it and test, prevent the intrusion of air to the test specimen.
4. Liquid film method: Examine 1~2 drops of liquid specimen as a thin film held between two optical plates. If the thicker film is required, place aluminum foil between the two optical plates to make a thicker liquid film.
5. Film method: Examine the test specimen as a thin film or a thin film made by the directed in monograph.
6. Gas sampling method: Under the pressure directed in the monograph, put a test gas in a gas cell evacuated previously, and examine its absorption spectrum. The path length of the gas cuvette is usually 5~10 cm, if necessary, may use 1 m of gas cuvette.

(1009) Determination of pH Value

The pH is a logarithm of a reciprocal which is the hydrogen ion concentration in aqueous solution (mole/L). The pH value is usually determined by potentiometry, if need the approximate value, determine by the colorimetric method with the indicator or pH indicator paper.

I. Potentiometric

The potentiometric determination of pH is measured the potential difference between two appropriate electrodes which is immersed in the test solution: one is the standard electrode (usually a calomel electrode) and the other is the indicator electrode (usually a glass electrode). The pH valve is determined by the potential difference of two electrodes.

Procedure: Use selected two standard buffer solutions, the difference in pH value is not more than 2 units, and the average pH value of the two standard buffer solutions is equal to the pH value of the test solution, calibrate the instrument. Unless otherwise directed in the individual monograph, measure at 25± 2˚. Adjust the fixed position and slope until the difference between the observed value on the apparatus and the known value of the standard buffer solutions not exceed 0.05 pH units. After each measurement, rinse the electrodes with water and small amounts of test solution alternately. Take double portions from each specimen, determine each sample two to three times, the deviation not more than 0.05 pH units. When determining several test solutions pH value continuously, calibrating the instruments with standard buffer solution to make sure the reading correct.

Preparation of the standard solution: There are few ways to prepare standard buffer solution: dilute concentrated solution with water, dissolve the solid mixture in water or use stock solution stated as below to make the solution. When making the stock solution with crystalline reagents, except for boric acid, dry at 110~120℃ for one hour before use, store the prepared solution in sealed hard glass container. The standard buffer solutions can be kept for 3 months at most, do not use if any turbidity, mold or precipitate occur.

Standard stock solution prepared as follow:

1. 0.2 M hydrochloric acid and 0.2 M sodium hydroxide: Follow the rule (9006) preparing the solution and standardizing the concentration.
2. 0.2 M Potassium hydrogen phthalate: Dissolve 40.846 g of potassium hydrogen phthalate in sufficient water, and dilute to 1000 mL.
3. 0.2 M Potassium dihydrogen phosphate: Dissolve 27.218 g of potassium dihydrogen phosphate in sufficient water, and dilute to 1000 mL.
4. 0.2 M boron hydroxide-potassium chloride: Dissolve 12.369 g of boron hydroxide and 14.911 g of potassium chloride in sufficient water, and dilute to 1000 mL.
5. 0.2 M Potassium chloride: Dissolve 14.911 g of potassium chloride in sufficient water, and dilute to 1000 mL.

The standard buffer solution with pH value from 1.2~10.0 can be made from the standard stock solution describe above. The accuracy of pH value is within 0.02 at 25℃.

1. Hydrochloric acid-potassium chloride standard buffer solution: Take 50 mL of 0.2 M KCl solution, put in a 200-mL volumetric flask, add following quantity of 0.2 M HCl, and sufficient water to 200 mL.

pH value	0.2 M HCl (mL)	pH value	0.2 M HCl (mL)
1.2	85.0	1.8	20.4
1.3	67.2	1.9	16.2
1.4	53.2	2.0	13.0
1.5	41.4	2.1	10.2
1.6	32.4	2.2	7.8
1.7	26.0		

2. Potassium hydrogen phthalate-hydrochloric acid standard buffer solution: Take 50 mL of 0.2 M potassium hydrogen phthalate solution, put in a 200-mL volumetric flask, add following quantity of 0.2 M HCl, and sufficient water to 200 mL.

pH value	0.2 M HCl (mL)	pH value	0.2 M HCI (mL)
2.2	49.5	3.2	15.7
2.4	42.2	3.4	10.4
2.6	35.4	3.6	6.3
2.8	28.9	3.8	2.9
3.0	22.3	4.0	0.1

3. Potassium hydrogen phthalate-sodium hydroxide standard buffer solution: Take 50 mL of 0.2 M potassium hydrogen phthalate solution, put in a 200-mL volumetric flask, add following quantity of 0.2 M NaOH, and sufficient water to 200 mL.

pH value	0.2 M NaOH (mL)	pH value	0.2 M NaOH (mL)
4.2	3.0	5.2	28.8
4.4	6.6	5.4	34.1
4.6	11.1	5.6	38.8
4.8	16.5	5.8	42.3
5.0	22.6		

4. Potassium dihydrogen phosphate-sodium hydroxide standard buffer solution: Take 50 mL of 0.2 M potassium dihydrogen phosphate solution, put in a 200-mL volumetric flask, add following quantity of 0.2 M NaOH, and sufficient water to 200 mL.

pH value	0.2 M NaOH (mL)	pH value	0.2 M NaOH (mL)
5.8	3.6	7.0	29.1
6.0	5.6	7.2	34.7
6.2	8.1	7.4	39.1
6.4	11.6	7.6	42.4
6.6	16.4	7.8	44.5
6.8	22.4	8.0	46.1

5. Standard buffer solution, boron hydroxide -potassium chloride-sodium hydroxide: Take 50 mL of 0.2 M boron hydroxide -potassium chloride solution, put in a 200-mL volumetric flask, add following quantity of 0.2 M NaOH and sufficient water to 200 mL.

pH value	0.2 M NaOH (mL)	pH value	0.2 M NaOH (mL)
8.0	3.9	9.2	26.4
8.2	6.0	9.4	32.1
8.4	8.6	9.6	36.9
8.6	11.8	9.8	40.6
8.8	15.8	10.0	43.7
9.0	20.8		

Notice: The water which is applied to determine the pH value should not contain carbon dioxide.

The pH value is different with the temperature change. The table represents the relationship between 0.05 M sodium borate pH value and temperature.

Temperature	10℃		15℃	20℃	25℃	30℃
pH value	9.29		9.26	9.22	9.18	9.14

The preparations of the usual pH indicator

Indicator	Range of pH	Conc -entr- ation	Color	Solvent
Methyl yellow	2.9~4.0	0.1%	Red~ yellow	Ethanol
Methyl orange	3.2~4.4	0.1%	Red~ yellow	Water
Bromophenol blue	3.0~4.6	0.05%	Yellow~ blue	3.0 ml of 0.05 N NaOH diluted to 200 ml with water
Bromocresol green	4.0~5.4	0.05%	Yellow~ blue	2.8 ml of 0.05 N NaOH diluted to 200 ml with water
Methyl red	4.2~6.2	0.05%	Red ~yellow	7.4 ml of 0.05 N NaOH diluted to 200 ml with water
Bromocresol purple	5.2~6.8	0.1%	Yellow~ purple	3.7 ml of 0.05 N NaOH diluted to 200 ml with water
Bromothymol blue	6.0~7.6	0.05%	Yellow~ blue	3.2 ml of 0.05 N NaOH h diluted to 200 ml with water
Phenol red	6.8~8.2	0.05%	Yellow~ red	5.7 ml of 0.05 N NaOH diluted to 200 ml with water
Thymol blue	8.0~9.2	0.05%	Yellow~ blue	4.3 ml of 0.05 N NaOH diluted to 200 ml with water
Thymolphthalein	9.3~10.5	0.1%	No	Ethanol

Indicator	Range of pH	Conc-entr-ation	Color	Solvent
			color~ blue	
Phenophthalein	8.3~10	1.0%	No color ~red	Ethanol

II. Colorimetric method

Comparing the colors of test solution and standard buffer solution both added with specified indicator in order to determine the pH value of test solution.

Indicator solution preparation: The preparations of indicator solutions used for volumetic analysis are listed in the method of reagent preparations. Reagents listed at here are used for determination of pH value. The indicators are mostly weakly acidic or weakly basic substances, and apply appropriate solvents to make the solution. Use ethanol as solvent for alkaline or phthalein compounds; for acidic compounds, weigh 100.0 mg of the compounds and add suitable volume of 0.05 N of sodium hydroxide (as table listed above), add appropriate quantity of degassed water to 200 mL. Keep the solution in a sealed hard glass container and avoid direct light.

Procedure: Add 1~2 drops of phenolphthalein to small amount of test solution, if the color of solution remains, the pH value of the solution is less than 8.3. Add methyl orange TS as described above, if the solution color turns to yellow, the pH value of the test solution is more than 4.4, thus the pH value of the test solution is in the range of 4.4~8.3. Determine the approximate pH value of test solution by trying different indicators such as methyl red TS, bromothymol blue TS and Phenol red TS. Choose a kind of TS, take 2~10 mL of test solution and place in a hard glass test tube with 150 mm in length and 16 mm in diameter. Use 0.1 mL scaled 1-mL pipette to transfer selected indicator to the test solution. To 10 mL of test solution, add 0.1~0.2 mL of indicator solution, mix well. Prepare equivalent volume hard tubes which are contained about 4~6 kinds of buffer solution, the pH value close to test solution, add specified amount of indicators respectively, mix well. Compare the color of test solution and buffer solution against a white background, allow the light transmission during observation, or determine in a color comparator. The pH value of test solution is equivalent to the buffer solution which color is same.

If the solution is cloudy or slightly colored and interfere the comparison, for clear determination, place a tube with clear water in front of test solution tube, and place a buffer solution tube in front of test solution tube to compare each set of test tubes.

(1010) Chromatography

Chromatography is the operation when the test specimen passes through a fixed and porous medium, and each component of the test specimen will undergo separation or purification. The chromatography is based on the different affinity of individual components to the stationary phase or on the different distribution coefficient of individual components between two phases, when the mobile phase pass through the stationary phase, different components are separated.

There are four common types of chromatography: column chromatography, paper chromatography, thin-layer chromatography, and gas chromatography. Paper and thin-layer chromatography are ordinarily more useful for purposes of identification, because of their convenience and simplicity, and only use a small amount of test specimen. Column chromatography offers a wider choice of absorbents and is useful for the separation of massive mixtures. Gas chromatography requires more elaborate apparatus, compressed gas, and adsorbents. Column chromatography and gas chromatography apply on quantitative and qualitative analysis.

R_f value of a test compound is the ratio of distance moved by the test specimen from the origin to distance moved by the mobile phase from the origin. Since R_f values may vary considerably due to different experimental condition, the identification of a compound is usually carried out by comparing the behavior of the test specimen with that reference substance under the same conditions. Under the same operation condition, there are three groups: same quantity of test specimen, standard, and mixture of the test specimen and the standard (1:1). If the test specimen is same as the standard, the color and R_f value of the three chromatographic spectrums is identical.

The spots obtained from chromatography can be localized as listed below:

1. If the spots are visible under visible or UV light, localize the spots.
2. After treating with visualization reagents, localize spots under visible or UV light. This method is usually applied in paper and thin-layer chromatography.
3. Localize spots contained radioactive elements with Geiger counter or radiographic technique.
4. Add segments of chromatogram into inoculated culture medium, and observe the effect of stimulation or inhibition on the growth of microorganism to localize the spots.

(1010.1) Column Chromatography

I. Adsorption column chromatography

Absorbent is added into a chromatographic column which has a stopcock under the tube, to form a compact

column. Then test specimen is dissolved in a small amount of solvent, or mix solid specimen with a small amount of adsorbent and place on the top of column. First add small amount of solvent until it flow into the adsorbent completely. Continuously add solvent as developing solvent, flow through the column by gravity. The flow rate can be controlled by application of air pressure. Each substance with different characteristics toward absorbents and developing solvents progress down the column to separation and give chromatogram. Continuously add developing solvent with stronger solvency in the column to elute out the compounds separately or take out the column substance from the chromatographic column, separate the column substance as chromatogram directed, each portion is extracted with suitable solvent. The separated compounds in the eluate can be determined by titration, spectrophotometry, colorimetric methods, evaporating the solvent and etc.

II. Partition column chromatography

In partition chromatography, the solutes are partitioned into two immiscible liquids, when the mobile phase passes through the stationary phase, and the separations are based on the differences in partition coefficient of solutes. The apparatus and procedure are identical to adsorption column chromatography. The silica gel or cellulose, which with moisture, is used as stationary phase, and they are equal to the adsorbent of the adsorption column chromatography. For the solvent that is used for mobile phase, it is better to saturate it with the solvent that is used in stationary phase first.

(1010.2) Paper Chromatography

This method applied the principle of the partition column chromatography, the filter paper with suitable texture and thickness is used as an adsorbent. The stationary phase adsorbs on the surface of filter paper fiber, and the mobile phase pass through the filter paper.

I. Descending method

Apparatus: A tight chamber provided with inlets for adding solvent or for releasing internal pressure. The chamber is preferred to be constructed by glass, stainless steel, or porcelain. The design of chamber should be permitted observation of the progress of the chromatographic run without opening of the chamber. A rack of corrosion-resistant material is located about 5 cm beneath the top of the chamber. The rack serves as a support for solvent troughs and chromatographic sheets.

Filter paper: Chromatographic sheets are special filter paper with width not less than 25 mm and can be hanged in the solvent troughs, length approximately equal to the height of the chamber. Draw a fine line horizontally at a suitable distance from one end of the filter paper by pencil, when the sheet is suspended from the upper end of antisiphon rods, the paper resting in the trough and the lower portion hanging free into the chamber, the line is located about 2~3 cm below the rods.

Procedure: Follow as stated below unless otherwise directed:

The substances to be analyzed are dissolved in a suitable solvent. Spot the solution which is contained 1~20 μg of the test specimen on the starting line by micropipette or capillary. The sample spot should have a diameter within 6~10 mm and each spot is at least 3 cm apart from each other. Add small amounts of binary phase solvent in the bottom of the chamber. It is important to ensure that the portion of the sheet hanging below the rods is freely suspended in the chamber without touching the rack or the chamber walls or the fluid in the chamber. The chamber is sealed to allow the chamber reaching saturation with the solvent vapor. Any excess vapor is released if necessary. For large chambers, equilibration overnight may be necessary. The prepared mobile phase solvent is introduced into the trough through the inlet. The inlet is closed and the mobile phase solvent reaches to the desired distance on the paper. Precautions must be taken to prevent the solvent run down the sheet when opening the chamber and removing the chromatogram. The location of the solvent front is quickly marked, dry the sheets. Determine the color and the location of spots as described before, using the equation below to obtain the R*f* value:

$$R_f = \frac{distance\ of\ starting\ line\ to\ substance\ spot\ center}{distance\ of\ starting\ line\ to\ solvet\ front}$$

II. Ascending method

The apparatus and procedures of this method are similar to the descending method. Put the developing solvent trough on the bottom of the developing chamber. The starting line is located 2~3 cm above the solvent trough and the test specimen does not immerse in solvent.

(1010.3) Thin-Layer Chromatography

The thin-layer chromatography is a separation technique that a uniform thin layer of adsorbent was applied to a glass or other supports. The separations may be achieved based on adsorption, partition, or the combination of both effects. Thin layer chromatography can be used for separation and identification of ingredients in the crude drugs. A visual comparison on the size or intensity of the spots may serve for quantitative estimation. Quantitative determinations are possible by means of densitometry, or the spots may be carefully removed from the plate, followed by extraction with a suitable solvent and use spectrophotometric measurement. For two-dimensional thin-layer chromatography, the developed plate is turned

at a 90° angle and again chromatographed in another chamber equilibrated with a different solvent system.

Apparatus: The materials for thin-layer chromatography as following:

Plates: Flat glass plates or aluminum plates with suitable size, typically 5 cm × 20 cm or 20 cm × 20 cm.

Adsorbent: The adsorbent consists of tiny and finely divided adsorbent materials. It can be used alone or with binders such as 5 - 15% calcium sulfate hemihydrate. Fluorescing material may also be added to aid the visualization of spots that absorb UV light. The plates commonly used are silica gel G, silica gel F_{254}, high-performance silica gel F_{254}, silica gel H or silica gel HF_{254}, diatomaceous earth, diatomaceous earth G, aluminum oxide, aluminum oxide G, microcrystalline cellulose, microcrystalline cellulose F_{254}, polyamide film, or sodium carboxymethyl cellulose.

Spreader: It is used to spread adsorbent on glass plate. It can apply a uniform layer of adsorbent with desired thickness over the entire surface of the plate.

Developing chamber: Use a similar chamber as in paper chromatography with glass support.

UV light source: A suitable UV light source for observations with short (254 nm) and long (365 nm) wavelength.

Procedure: Unless otherwise indicated, follow the methods described below:

Clean and dry the glass plate. Specific quantity of the adsorbent and solvent are mixed by grinding or shaking vigorously for 30 seconds to the slurry. Spread a layer of slurry with thickness about 0.2~0.3 mm evenly on glass by a spreader. Dry the plate, heat at a specified temperature in 105~120℃ for 30~60 minutes, place in the desiccators. At 2 cm below the lower edge of chromatographic plate as the start line, apply sample solution and reference standard solution on the start line by micropipette or capillary tube. The start line is apart at least 1cm from two side of the plate, the interval of the center spots is at least 1~1.5 cm, dry. The plate is placed in the developing chamber with solvent about 1 cm deep, the chamber is seal and the plate is allowed to develop at room temperature.

Remove the plate from the chamber when the solvent reach the predetermined height (5~10 cm from the starting line), mark a line on the solvent front and dry the plate. Developed plates can be observed under short and long UV light, spots can be detected by spraying reagents or exposing in iodine vapor. Measure and record the distance of each spot from the point of origin, and indicate the wavelength for observing at each spot. Calculate the R_f value of the principle spots or zone and compare sample value with reference standard value.

(1010.4) Gas Chromatography

Gas chromatography is a separation technique which is used an inert gas as mobile phase gas, separation is occurred due to the different distribution coefficient between each component in vaporized test specimen. It is the suitable identification test for the gas, liquid, solid test specimen, also test impurities and quantity.

In gas-solid chromatography, the stationary phase is a solid adsorbent with suitable fineness. In gas-liquid chromatography, the stationary phase is the surface of the inert solid support or the capillary wall coated with the non-volatile liquid to form a film.

Apparatus: A gas chromatograph consists of a carrier gas source, a gas flow regulator, an injection port, column, detector, and recording device. Injection port, column and detector are in thermostatic bath.

Procedure: Each thermostatic bath is adjusted to the specified temperature. Suitable carried gas is chosen and the flow rate is adjusted. A specified quantity of the test specimen solution or standard solution is injected by microsyringe which is for gas chromatography. The separated components are determined by detector, and the chromatogram is depicted by recording device. The unit of the abscissa is time, and the unit of the ordinate is millivolt in the chromatogram.

In the qualitative analysis, determine the retention time of the standard solution (the time elapsed between the injection of the test specimen and the appearance of the maximum peak) or the retention volume (the volume of mobile phase required for elution of a component), then determine the test specimen in the same conditions. If the retention time or retention volume of the test specimen is same to the standard, there is a great possibility that the two substances are identical.

For the quantitative analysis, follow the method as described below:

I. Internal standard method: As specified in the monograph, a quantity of internal standard solution is added to the standard solutions with different concentration and chromatogram is recorded under same experimental conditions. Then, a calibration curve is made, the ordinate is the ratio of the peak of the standard to the peak of the internal standard, and the abscissa is the ratio of the content of the standard to the content of the internal standard.

Solutions contained test specimen is prepared as described in the monograph with the same quantity of internal standard, to make the test solution. The solution is injected into the equipment and the chromatogram is recorded under the same conditions. Calculate the ratio of the peak of the objective component to the peak of the internal standard and the quantity of the objective component is calculated by the reference to the calibration curve. Internal standard should have high

stability and its peak should be similar to objective component, but totally separate from the peak of the components in test specimen.

II. Absolute calibration curve method: Take a quantity of each standard solution with different concentrations and to record the chromatograms under the same conditions. Calibration curve is depicted with the ordinate is the peak of each standard, and the abscissa is the concentration of the standard.

The sample solution is prepared as specified in the monograph and the chromatograms are recorded under the same conditions. The concentration of sample is calculated by its peak respond with calibration curve.

III. Area normalization Procedure: The total peak area under each component is regarded as 100%, and then the percentage of each component in the test specimen is calculated by the ratio of peak area under each component. For determining the accurate value, calibrate the peak area of each component by the sensitivity of the detector.

Two ways of determining peak response:

1. Peak height method: Draw a vertical line from the maximum of the peak to the horizontal axis, and then draw a lines form the start to the end of the peak, the distance of intersecting point of two lines to the horizontal axis is the peak height.
2. Peak area method: Multiply the peak width at the half-height by the peak height to get the area.

(1010.5) High-Performance Liquid Chromatography

High-performance liquid chromatography is a method of chromatographic separation in which the mobile phase is pumped into a column which is packed with particles as stationary phase by a high-pressure pump system. The injected test solution is carried into the column by the mobile phase. Each component is separated by affinity difference with the stationary phase. The method can be applied for identification test, impurities test and quantitative test for liquid or liquid soluble specimen.

Apparatus: Liquid chromatography system consists of injection port for injecting test specimen, a chromatographic column, a detector, and recording device. The temperature of chromatographic column can be maintained in a column oven. A pump is the device which forces the mobile phase to pass through the chromatographic column system at high pressure. Columns are made by inactive metal with internal diameters of 1~10 mm and length of 5~100 cm. The size of packing particles are uniform in size with a range of 1~50 μm. The different properties of the objective compounds in the mobile phase are determined by different detectors. Commonly used detectors are UV/Vis absorption spectrophotometer detector, differential refractometer detectors, and fluorometric detectors. Detectors are highly sensitive and the detection limit is in a few μg. The higher concentrations of the target compounds are detected, the stronger signals are presented. The detector gives out signals with different intensity and they are collected by recording device.

Procedure: After adjusting the apparatus, use the detector, chromatographic column, and the mobile phase that indicated in the monograph. Equilibrate the column with the prescribed mobile phase, flow rate and at the temperature specified in the monograph, until a stable baseline is achieved. Inject a specified quantity of test solution or the standard solution through sample valve by micro syringe. Separated components are detected by the detector which transfers received signals into the reorder to display chromatogram. Each component in the mixture injected in the column is often distributed as constant ratio k in the mobile phase and the stationary phase.

$$k=\frac{\text{amount of substance in stationary phase}}{\text{amount of substance in mobile phase}}$$

k: the ratio is also called capacity factor or mass distribution ratio (k').

The relation of the capacity factor (k), time of the mobile phase pass through the column (t_0), and retention time (t_R) is described as below. The retention time of the substance remain constant under the same conditions.

$$t_R = (1+k')\,t_0$$

or

$$k' = \frac{t_R}{t_0} - 1$$

t_0: the retention time of a non-retained (k=0) substance

t_R: the retention time of a test specimen

The relative retention time is applied to identification of the composition. Calculate the relative retention time (α) as described below.

$$\alpha = \frac{t_2 - t_0}{t_1 - t_0}$$

The t_1, t_2 in the equation is the retention time of the component 1 and component 2 under the same chromatographic factors. The retention volume or the retention distance is usually proportional to the retention time, thus both can be substituted for retention time in the equation. If the value of t_0 is relatively small, relative retention time can be calculated by t_2/t_1.

The efficiency of the chromatographic column is described as theoretical plates:

$$n = 16\left(\frac{t}{w}\right)^2$$

In the equation, t is the retention time of the component to be determined and w is the width that determined by

extending tangent lines on both side of the chromatographic peak through the baseline. The value of theoretical plates (n) is related to the test specimen, flow rate, column temperature, quality and uniformity of packing particles within the column.

Resolution (R) is the extent of the two components' peak separate with each other, calculated by:

$$R = \frac{2(t_2 - t_1)}{W_2 + W_1}$$

W_1 and W_2 are the width that determined by extending tangent lines on both side of the chromatographic peak through the baseline. The symmetry factor (T, also known as the tailing factor) of peak is calculated by:

$$T = \frac{W_{0.05}}{2f}$$

$W_{0.05}$: the width at 5% height from baseline to peak.
f: distance from peak front to apex point at 5% height.

The tailing factor is limited in the monograph if necessary.

System suitability: For ensuring the effectiveness and suitability in the chromatographic factors, all or part of the chromatographic parameters are usually specified in individual monographs, if necessary, other suitable operating conditions can be used (see procedures under tests and assays in the general notices).

Collecting data from replicate injections of standard or test solutions as specified in the individual monograph, calculate the column efficiency, precision, tailing factor, resolution, retention time, calibration curve, peak area, and recovery, then compare with specified maximum and minimum values in the monograph.

The reproducibility of repeat injection of liquid into chromatographic column is described as relative standard deviation which is one of practical parameter. The equation of Relative Standard Deviation (RSD) is described below:

$$S_R(\%) = \frac{100}{\overline{X}} \left[\frac{\sum_{i=1}^{N} \left(Xi - \overline{X}\right)^2}{N-1} \right]^{1/2}$$

In the equation, S_R is the relative standard deviation described as %, X is an arithmetic mean in a set of N measurements, Xi is an individual measurement in a set. In internal standard, X_i is the ratio of the peak R_S.

$$Xi = R_S = \frac{r_s}{r_i}$$

Where r_s is the peak value of the standard and r_i is the peak value of the internal standard. If external standard is used, Xi is the standard peak value r_s.

As specified in the monograph, replicate injections for standard solution to determine whether the consequence of the analysis suitability meet the requirements. Unless otherwise specified in the individual monograph, if the requirement of relative standard deviation is 2.0% or less, calculate RSD of peak area from five injection bases. If the requirement is more than 2.0%, calculate RSD peak area from six injection bases. Tailing factor T refers to the maximum allowable asymmetry factor. Resolution R refers to how well two elution peaks can be separated. It is also called separation efficiency.

Identification: When liquid chromatography is used to identify a component in the test specimen, it is performed by confirming identity of the retention time between the component and the standard, or by confirming the peak width and retention time of the component are unchanged after mixing the test specimen with the standard.

Impurities: Usually performed by comparison of a reference solution equal to a specified impurities limit with the test specimen. Comparison of peak area percentage by area normalization method can also be used. The isomer ratio of the test specimen is usually calculated by area normalization method.

Area normalization procedure: The total peak area under each component is regarded as 100%, calculate the percentage of each component peak area. For determining the accurate proportion of components, each content peak area must be calibrated by determining sensitivity of each component.

Assay: Internal standard method is commonly applied. If there has no suitable internal standard, the calibration curve method can be applied.

Method I: Internal standard method

In the internal standard method, choose a stable compound as an internal standard which retention time closes to the objective compounds, and the peak is well separated from all other peaks in the chromatogram.
As specified in the monograph, prepare several standard solutions with different concentrations, and add a constant amount of the internal standard in each standard solution. Based on the chromatogram obtained from each standard solution which is tested in constant volume, make the calibration curve, the ordinate is the ratio of the peak height or the peak area of the objective compound standard to the internal standard, and the abscissa is the ratio of the content of the objective compound standard to the content of the internal standard. The calibration curve is often a straight line passing through the origin.

Then, according to the method specified in the individual monograph, prepare a test solution by adding the same amount of internal standard as describe above, perform the liquid chromatography under the same operating conditions as for the preparation of the calibration curve, calculate the ratio of the peak area or peak height of the objective compound standard to the

internal standard, and get the amount of the compound by the calibration curve.

Generally, in the individual monograph, prepare one of the standard solutions with a concentration within the linear range of the calibration curve and a test solution with a concentration close to the standard solution, take a specified quantity of both solutions, and perform chromatography under constant conditions to determine the amount of the objective compound.

Method II: Absolute calibration curve method

Prepare a serial of standard solutions with different concentration with the objective compound standard solution, and take accurately a fixed volume of these standard solutions for chromatography. Based on the chromatogram obtained, make the calibration curve, the ordinate is the peak areas or peak heights, and the abscissa is the content of the standard. The calibration curve is generally a straight line passing through the origin.

Then, prepare a test specimen solution according to the method specified in the individual monograph, perform the liquid chromatography under the same conditions as the preparation for the calibration curve. Base on the peak area or peak height of the objective component, determines the amount of the component by the calibration curve.

Generally, in the individual monograph, prepare one of the standard solutions with a concentration within the linear range of the calibration curve and a test solution with a concentration close to the standard solution, take a specified quantity of both solutions, and perform chromatography under constant conditions to determine the amount of the objective compound. In this method, all procedures must be carried out under a strictly constant condition. If necessary, repeating the injection of fixed volume of the standard solution and confirm the peak response of each component on the chromatogram. The relative standard deviation or coefficient of variation is calculated to confirm the reproducibility of the peak response of the objective component.

Peak measuring method: Peak response includes two measuring methods, and both can be automatically recorded as values by recorder.

1. Peak height method: draw a vertical line from the maximum of the peak to the baseline, and draw another line from the start to the end of the peak, the intersecting point of both lines to the maximum of the peak is the peak height.
2. Peak area method: Multiply the peak width at the half-height by the peak height.

Although peak height method is simple, due to the temperature and solvent composition may cause the big variation on retention time, thus the peak area method is more accurate. If the peak area method is indicated in the monograph, follow the rule.

(1015) Determination of Fineness Degree of Powders

The fineness degree of powders in the pharmacopeia is represented as sieve number. For the determination of fineness degree of powders and the specifications of standard test sieve are required in the following: Using standard test sieves in the determination of fineness degree of powders is a practical method, but this method cannot measure the size range of powders. The fineness degree of drug powders is related to the absorption of drug rapid and complete or not in the gastrointestinal tract, which has a direct impact on the efficacy. This method is not suitable to powder marked less than 100 μ, use other method to measure the fineness degree of powders is more convenient.

When separating the powders with sieve, the efficiency and speed of this method are highly related to the amount of retained powder on the sieve. If the thickness of retained powder is more than 6~8 particles, then the efficiency is reduced significantly.

Standard test sieves: Standard test sieves is braided with metal or other wire of appropriate substances. Brass, bronze, stainless steel and other suitable materials may be used as the material for sieve, those metals are not allowed to coat or electroplate with other substances or metals. The sieve number is determined by the number of sieve holes between the parallel sieves lines which distance are 2.54 cm. The following table records the sieve number of each standard test sieve and specification of pore.

Powers of herbal drugs: The requirements of fineness degree of powders in the pharmacopeia, divide into five species, Very coarse (No. 8), Coarse (No.20), Medium (No. 40), Fine (No. 60) and Ultra fine (No. 80). When a crude drug is specified as certain degree powders, unless otherwise directed, no part can be discarded during milling or sieving procedure. Residue remains on a sieve during the process, should not exceed 5% of the original amount. The residue can be added into the next batch of same drugs, but the quantity should not exceed 5%.

The requirement for fineness degree of crude drug powder as follows:

1. Very coarse (No. 8): All particles should pass through No. 8 sieve, but not more than 20% pass through No. 60 sieve.
2. Coarse (No. 20): All particles should pass through No. 20 sieve, but not more than 40% pass through No. 60 sieve.
3. Medium (No. 40): All particles should pass through No. 40 sieve, but not more than 40% pass through No. 80 sieve.
4. Fine (No. 60): All particles should pass through No. 60 sieve, but not more than 40% pass through No. 100 sieve.
5. Ultra fine (No. 80): All particles should pass through No. 80 sieve.

The chemical powder: The requirements for fineness degree of chemical powders in the pharmacopeia divided into four species, requirement as follows:

1. Coarse (No. 20): All particles should pass through No. 20 sieve, but not more than 60% pass through No. 40 sieve.
2. Medium (No. 40): All particles should pass through No. 40 sieve, but not more than 60% pass through No. 60 sieve.
3. Fine (No. 80): All particles should pass through No. 80 sieve
4. Ultra fine (No. 120): All particles should pass through No. 120 sieve.

Specification of standard test sieve and sieve pore:

Sieve No.	Internal diameter of aperture	
	mm	μm
No. 2	9.52	9520
No. 4	4.76	4760
No. 8	2.38	2380
No. 10	2.00	2000
No. 20	0.84	840
No. 30	0.59	590
No. 40	0.42	420
No. 50	0.297	297
No. 60	0.250	250
No. 70	0.210	210
No. 80	0.177	177
No. 100	0.149	149
No. 120	0.125	125
No. 200	0.074	74
No. 230	0.063	63
No. 270	0.053	53

Determination for the uniformity of powder:

The uniformity of drug powders or chemical powders are measured as follows, use the standard test sieves as described above. Avoid shaking too long for increasing the fineness of the powder during the test.

1. Determination of very coarse, coarse and medium powders: Place 25~100.0 g of test specimen in a suitable standard test sieve, the bottom of sieve tightly connect with a suitable receiver, the top of sieve tightly stoppered. Rotate and shake standard sieve by the horizontal direction, and often tap the sieve on the hard plane. The sieving requires at least 20 minutes, or no more powders pass through the standard test sieve. Weigh the powder in a receiver and powder remains in the sieve separately.
2. Determination of fine and ultra-fine powders: The method is as above, the maximum amount of test specimen is not more than 25.0 g, rotate the standard test sieve at least 30 minutes, or no powder passes through standard test sieve. If the powder contains oil or other substance which makes obstruction, carefully flick sieve to make it disintegrating. During sieving, no more grinding to avoid further fineness of the powder. It is able to use motorized sifter device in determination for the uniformity of drug powders or chemical powders. The method refers to that place the standard test sieve in a motorized sifter device, shake in a suitable rate. This method gives a greater effectivity than hand- sifter method.

II. Identification Tests

(2001) General Identification Tests

Under this heading are placed tests that are frequently referred to in the pharmacopeia for the identification of reagents and crude drugs. The tests are not intended to be applicable to mixtures of substances unless otherwise directed.

Acetate

1. When acetate is warmed with dilute sulfuric acid, its characteristic odor is evolved.
2. When acetic acid or acetate is warmed with sulfuric acid and alcohol, the characteristic odor of ethyl acetate is evolved.
3. With ferric chloride TS, neutral or weakly acidic solutions of acetates produce a dark red color and a red-brown precipitate when boiled. The precipitate is soluble in hydrochloric acid with the color of the solution changes to yellow.

Borate

1. Turmeric paper is dipped into a borate solution acidified with hydrochloric acid, exhibiting a brown color, the color turning darker after drying and changing to greenish-black with ammonia TS.
2. When a borate is treated with sulfuric acid, methanol is added, and the mixture is ignited, it burns with a green-bordered flame.

Carbonate and bicarbonate

1. Carbonates and bicarbonates effervesce with dilute acids, evolving a colorless gas of carbon dioxide, which produces a white precipitate immediately, when passed into calcium hydroxide TS.
2. A cold solution of carbonates is colored red by phenolphthalein TS, while a cold solution of bicarbonates remains unchanged or exhibits only a slightly red color.

Ferric salt and ferrous salt

1. Neutral solutions of ferric salts or ferrous salts produce a black precipitate immediately with ammonium sulfide TS. This precipitate is soluble in cold and dilute hydrochloric acid with the

evolution of hydrogen sulfide.
2. Acidic solutions of ferric salts produce a dark blue precipitate with potassium ferrocyanide TS.
3. Solutions of ferric salts produce a reddish-brown precipitate with an excess of sodium hydroxide TS.
4. With ammonium thiocyanate TS, solutions of ferric salts produce a deep red color that is not destroyed by dilute mineral acids.
5. With potassium ferricyanide TS, solutions of ferrous salts produce a dark blue precipitate that is insoluble in dilute hydrochloric acid but is decomposed by sodium hydroxide TS.
6. With sodium hydroxide TS, solutions of ferrous salts produce a pale green precipitate, the color rapidly changing to green and then to brown when shaken.

Iodide

1. Solutions of iodides, upon the addition of chlorine TS, dropwise, liberate iodine, which is shaken with chloroform, the chloroform layer is colored violet; which gives a blue color with starch TS.
2. With silver nitrate TS, solutions of iodides produce a yellow, curdy precipitate that is insoluble in nitric acid and ammonia TS.
3. When an iodide is warmed with sulfuric acid and manganese dioxide, its violet vapor is evolved.
4. With mercuric chloride TS, solutions of iodides produce a scarlet precipitate that is slightly soluble in an excess of mercuric chloride TS but readily soluble in an excess of potassium iodide TS.

Nitrite

1. Nitrites evolve brownish-red fumes with dilute mineral acids or acetic acid.
2. Solutions of nitrites, upon the addition of potassium iodide TS and dilute sulfuric acid, dropwise, liberate iodine, which gives a blue color with starch TS.

Permanganate

1. Solutions of permanganates acidified with sulfuric acid are decolorized by hydrogen peroxide TS and by sodium bisulfite TS, in the cold, and by oxalic acid TS, in hot solution.

Phosphate

1. With silver nitrate TS, neutral solutions of phosphates produce a pale yellow precipitate that is soluble in dilute nitric acid and ammonia TS.
2. With dilute nitric acid and ammonium molybdate TS, neutral solutions of phosphates produce a yellow precipitate that is soluble in ammonia TS.
3. With magnesium ammonium chloride TS, neutral solutions of phosphates produce a white crystalline precipitate that is soluble in dilute hydrochloric acid.

Potassium salt

1. Potassium salts are applied to the platinum wire moistened with hydrochloric acid, imparting a violet color to a nonluminous flame by viewing through cobalt glass.
2. With sodium bitartrate TS, neutral, concentrated solutions of potassium salts slowly produce a white crystalline precipitate that is soluble in ammonia TS and solutions of alkali hydroxides and carbonates. The formation of the precipitate, which is usually slow, is accelerated by stirring or rubbing the inside of the test tube with a glass rod. The addition of a small amount of glacial acetic acid or alcohol also promotes the precipitation.
3. With a small amount of hydrochloric acid and platinic chloride TS, concentrated solutions of potassium salts produce a yellow crystalline precipitate. The precipitate is decomposed to potassium chloride and platinum after ignition.

Silver salt

1. With hydrochloric acid, solutions of silver salts produce a white, curdy precipitate that is insoluble in nitric acid but readily soluble in ammonia TS.
2. When the solution of silver salts is warmed with ammonia TS and a small quantity of formaldehyde TS, a mirror of metallic silver upon the sides of the container.
3. With potassium chromate TS, solutions of silver salts produce a red precipitate that is soluble in dilute nitric acid.

Sodium salt

1. With cobalt–uranyl acetate TS, solutions of sodium salts after conversion to chlorides or nitrates produce a yellow precipitate, which forms after agitation for several minutes.
2. Sodium salts are applied to the platinum wire moistened with hydrochloric acid, imparting an intense yellow color to a nonluminous flame.
3. With potassium pyroantimonate TS, neutral or alkaline concentrated solutions of sodium salts produce a white crystalline precipitate. The formation of the precipitate is accelerated by rubbing the inside of the test tube with a glass rod.

Sulfate

1. With barium chloride TS, solutions of sulfates produce a white precipitate that is insoluble in hydrochloric acid and nitric acid.

2. With lead acetate TS, neutral solutions of sulfates produce a white precipitate that is soluble in ammonium acetate TS.
3. With hydrochloric acid, solutions of sulfates produce no precipitate. (Distinction from thiosulfates).

Sulfide

1. With hydrochloric acid, sulfides evolve the characteristic odor of hydrogen sulfide, which blackens lead acetate paper moistened with water.

Sulfite and bisulfite

1. With dilute hydrochloric acid, sulfites and bisulfites evolve the characteristic odor of sulfur dioxide, which blackens filter paper moistened with mercurous nitrate TS.
2. With sodium sulfide TS, solutions of sulfites and bisulfites produce a white precipitate, which changing to yellow gradually.
3. Solutions of sulfites and bisulfites decolorize iodine TS.

(2002) Thin Layer Chromatographic Identification Test

This test is an auxiliary test for the identification of thecrude drugs. The procedures are described below:

Prepare a sample solution as indicated in the monograph. Choose a suitable plate coated with a 0.25 mm layer of chromatographic silica gel containing fluorescent agent. Follow the method for Thin-Layer Chromatography (General rule 1010.3). Unless otherwise directed, apply 10 μL of each of the sample solution and the reference standard solution to the plate at about 2 cm from the origin, and use a solution of chloroform, methanol, and water (180:15:1) as the developing solvent. Once the top of the solvent rise to about three-fourths from the origin, remove the plate from the developing chamber, mark the solvent front, and dry in the air. Unless otherwise directed, examine the plate under ultraviolet light at 254 nm. The spots in the chromatogram obtained from the sample solution correspond in R_f values to the spots in the chromatogram obtained with the reference standard solution.

III. General Determinations

(3001) Determination of Loss on Drying

Dry the weighing bottle at the temperature specified in the monograph for 30 minutes, allow it to cool to room temperature in a desiccator and weigh accurately. Mix the test substance thoroughly. If the test specimen is in the form of large particles, reduce the particle size to about 2.0 mm by grinding. Unless otherwise indicated in the individual monograph, place 1~2 g test specimen in a weighing bottle, weigh accurately. Sidewise shaking gently, distribute the test specimen as evenly as possible to a depth less than 5 mm roughly and not more than 10 mm for bulky materials. Place the loaded bottle in the drying chamber, removing the stopper and leaving it also in the chamber. Dry the test specimen at the temperature and for the time specified in the monograph. Upon opening the chamber, close the bottle promptly, and allow it to come to room temperature in a desiccator before weighing.

If the substance melts at a temperature lower than the specified drying temperature, maintain the bottle with its contents for 1 to 2 hours at a temperature 5~10 below the melting temperature, then dry at the specified temperature.

Where drying in vacuum over a desiccant is directed in the individual monograph, a vacuum desiccator or other suitable vacuum drying apparatus can be used.
Replace the desiccant in the desiccator frequently to assure the efficiency of drying.

(3002) Determination of Residue on Ignition

Ignite a suitable crucible at about 800℃, cool the crucible in a desiccator, and weigh it accurately. Weigh accurately 1~2 g of test sample specified in the individual monograph in the crucible and weigh accurately again. Ignite the crucible gently and slowly, until it is thoroughly charred, cool. Unless otherwise directed, add 1 mL of sulfuric acid, then ignite at 800 ± 25℃ until the residue is completely incinerated. Cool the crucible in a desiccator and weigh accurately, and calculate the percentage of residue. If the amount of the residue obtained exceeds the limit specified in the individual monograph, add 1 mL of sulfuric acid, again and repeat the procedures as described above.

(3003) Determination of Chlorides and Sulfates

The following tests are provided as general procedures for use where limits for chloride or sulfate are specified in the individual monographs. Use the same quantities of the same reagents for both the sample solution under test and the control solution containing the specified amount of chloride or sulfate. If, after acidification, the solution is not perfectly clear, pass it through a filter paper that gives negative tests for chloride and sulfate. Add the precipitant, silver nitrate or barium chloride as required, to both the test solution and the control solution in immediate sequence. When comparing the turbidity, place the solution in colorimetric tubes which are same in diameter and observe the solution in the specified time.

Where the individual monograph calls for applying the test to a specific volume of a test solution of the

substance, if chloride or sulfate content are corresponds to 0.20 mL or less of 0.020 N hydrochloric acid or sulfuric acid, use the solution directly on the test without further dilution. In such cases maintain the same volume relationships for the control solution as specified for the solution under test. In applying the test to the salts of heavy metals, which normally show the acidic reaction in solution, the acidification can be omitted in the procedure, and do not neutralize the solution. For detecting bismuth salt samples, dissolve bismuth salts in a small quantity of water and 2 mL of nitric acid, then determine the solution as above.

Chlorides: Dissolve the specified quantity of sample in 30~40 mL of water. If the sample had been prepared in solution already, make up chloride solution with the sample solution to a total volume of 30~40 mL by adding extra water. If necessary, use litmus paper as an indicator, and neutralize the solution with nitric acid. Add 1 mL of nitric acid, 1 mL of silver nitrate TS and sufficient water to make 50 mL solution. Mix well and allow it to stand for 5 minutes in dark. Unless otherwise directed in the monograph. If any turbidity occurs, compare the turbidity with the solution containing 0.020 N of hydrochloric acid specified in the monograph.

Sulfates: Dissolve the specified quantity of the sample in 30~40 mL of water. If the sample had been prepared in solution already, make up sulfate solution with the sample solution to total volume of 30~40 mL by adding extra water. If necessary, use litmus paper as an indicator, and neutralize the solution with hydrochloric acid. Add 1 mL of 3 N dilute hydrochloric acid, 3 mL of barium chloride, and sufficient water to make 50 mL solution. Mix well, stand for 10 minutes. Unless otherwise directed in the monograph, compare the turbidity with the solution containing 0.020 N sulfuric acid specified in the monograph.

(3005) Determination of Total Heavy Metals

This test is provided to demonstrate the content of metallic impurities that are colored by sulfide ion, under the specified test conditions. Total heavy metals limit is specified in the individual monograph (represent in parts per million (by weight) of lead in the test specimen), as determined by visual comparison with a control, a standard lead solution. Substances that typically respond to this test are lead, mercury, bismuth, arsenic, antimony, tin, cadmium, silver, copper, and molybdenum.

Determine the amount of total heavy metals by method I, unless otherwise directed in the individual monograph. Method I is used for preparation that yield clear, colorless substances under the specified test conditions. Method II is used for preparation that do not yield clear, colorless substances under the test conditions specified for method I, or for substances have complex nature, which yield interfering sulfide ion metals precipitate, or for fixed and volatile oils. Method III, wet-digestion method, is used only in those cases which neither method I nor method II can be used.

Reagents:

1. **Lead nitrate stock solution**: Add1 mL of nitric acid in 100 mL of water, and dissolve 159.8 mg of lead nitrate in the solution, and then dilute with water to 1000 mL. Prepare and store this solution in glass containers free from soluble lead salts.
2. **Standard lead solution**: Dilute 10.0 mL of lead nitrate stock solution with water to 100.0 mL. Each mL of standard lead solution contains 0.01 mg of lead. This solution should be prepared on the day of use. A comparison solution prepared on the basis of 0.1 mL of standard lead solution and 1.0 g of test specimen. If both have the same color, the test specimen contains 1 portion of lead per million which is 1ppm.
3. **pH 3.5 acetate buffer**: Dissolve 25.0 g of ammonium acetate in 25 mL of water, and add 38.0 mL of 6 N hydrochloric acid. If necessary, adjust with 6 N ammonium hydroxide or 6 N hydrochloric acid to pH 3.5, dilute with water to 100 mL, and mix.

Method I

Standard solution: Measure accurately, a set amount of standard lead solution (lead content meets with the limits of heavy metals contents in test specimen), Pipet the solution in a 50-mL colorimetric tube, and dilute with water to 25 mL. Use a pH meter or short-range pH indicator paper as an external indicator, adjust with 1 N acetic acid or 6N ammonium hydroxide to a pH between 3.0~4.0, dilute with water to 40 mL and mix.

Test solution: Place 25 mL of test solution which prepared as indicated in the monograph in a 50-mL colorimetric tube, adjust the pH value between 3.0~4.0 by 1 N of acetic acid or 6N ammonium hydroxide Using pH meter or pH indicator paper as indicator, dilute with water to 40 mL and mix.

Reference solution: Place 25 mL of solution which is prepared as directed for test preparation in a third 50-mL colorimetric tube and add 2.0 mL of standard lead solution. Use a pH meter or short-range pH indicator paper as an external indicator, adjust with 1 N acetic acid or 6N ammonium hydroxide to a pH between 3.0~4.0, dilute with water to 40 mL, and mix.

Procedure: To each of the three tubes as described above, add 2 mL of pH 3.5 acetate buffer, then add 1.2 mL of thioacetamide-glycerin base TS, dilute with water to 50 mL, mix, allow to stand for 2 minutes, and view downward over a white paper. The color of the solution from test solution is not darker than that of the solution from the standard solution. If the color of the reference

solution is lighter than the standard solution, use method II instead of method I.

Method II

Standard solution: Prepare as directed under method I.

Test solution: Place 1.0 g (take 500 mg if total heavy metals limit of test specimen over 30 ppm) of the test specimen in a crucible, moisten test specimen with sufficient sulfuric acid, and carefully ignite at a low temperature until thoroughly carbonized. (The crucible may be loosely covered with a suitable lid during the charring) Add 2 mL of nitric acid and 5 drops of sulfuric acid to the carbonized mass, and heat cautiously until no longer producing white fumes. Ignite, preferably in a muffle furnace, at 500~600℃, until the carbon is completely burned off. Cool, add 4 mL of 6N hydrochloric acid, cover it, digest on a steam bath for 15 minutes, uncover, and slowly evaporate on a steam bath to dryness. Moisten the residue with 1 drop of hydrochloric acid, add 10 mL of hot water, and digest for 2 minutes. Add 6 N ammonium hydroxide dropwise until the solution is alkaline to litmus paper, dilute with water to 25 mL, and adjust with 1 N acetic acid to pH 3.0~4.0, using short-range pH indicator paper as an external indicator. Filter if necessary, rinse the crucible and the filter with 10 mL of water, combine the filtrate and rinsing in a 50-mL colorimetric tube, dilute with water to 40 mL, and mix.

Procedure: To each of the tubes as described above add 2 mL of pH 3.5 acetate buffer, then add 1.2 mL of thioacetamide-glycerin base TS, dilute with water to 50 mL, mix, allow to stand for 2 minutes, and view downward over a white paper. The solution color of the test preparation should be lighter than that the solution of standard preparation.
NOTE: Method does not use for the sample contained mercury.

Method III

Standard solution: Transfer a mixture of 8 mL of sulfuric acid and 10 mL of nitric acid to a 100-mL Kjeldahl flask which is dry and clean, and add a suitable volume of nitric acid which is equal to the volume of nitric acid added to the test preparation. Heat the solution to produce the white fumes, cool, add 10 mL of water and, if hydrogen peroxide was used in the test preparation, add a volume of 30% hydrogen peroxide equal to that used for the test specimen. Boil gently to produce the white fumes, cool again, cautiously add 5 mL of water, mix, boil gently to produce the white fumes until solution volume reduce to 2~3 mL. Cool, dilute with few mL of water, add 2.0 mL of standard lead solution (equal to 0.02 mg of Pb), and mix. Transfer to a 50 mL colorimetric tube, rinse the flask with water, adding the rinsed liquid to the tube until the volume is 25 mL, and mix.

Test solution:

1. **Solid specimen**: Transfer 1.0 g of the test substance to a 100-mL Kjeldahl flask which is clean and dry. (NOTE**:** A 300-mL flask may be used if the reaction foams excessively.) Clamp the flask at an angle of 45°, and add a sufficient quantity of a mixture of 8 mL of sulfuric acid and 10 mL of nitric acid to moisten the substance thoroughly. Warm gently until the reaction occurs, until the reaction subside, add portions of the same resting acid mixture several times, heating after each addition, until total of 18 mL of the acid mixture has been added. Increase the heat strength, and boil gently until the solution darkens. Cool, add 2 mL of nitric acid, and heat again until the solution darkens. Continue the heating, followed by addition of nitric acid until no further darkening occurs, then heat strongly to the production of dense, white fumes. Cool, cautiously add 5 mL of water, boil gently to the production of dense, white fumes, and continue heating until the volume is reduced to a few mL. Cool, cautiously add 5 mL of water, and examine the color of the solution. If the color is yellow, cautiously add 1 mL of 30 % hydrogen peroxide, and again evaporate to the production of dense, white fumes and a volume of 2~3 mL. If the solution is still yellow, repeat the addition of 5 mL of water and the peroxide treatment. Cool, dilute cautiously with a few mL of water, and rinse into a 50-mL colorimetric tube, taking care that the combined volume does not to exceed 25 mL.
2. **Liquid specimen**: Transfer 25 mL of the test substance to a 100-mL Kjeldahl flask which is clean and dry. (NOTE**:** A 300-mL flask may be used if the reaction foams excessively.) Clamp the flask at an angle of 45°, and cautiously add a few mL of a mixture of 8 mL of sulfuric acid and 10 mL of nitric acid. Warm gently until the reaction occurs, until the reaction subside, and proceed as directed in the solid substance, beginning with "add portions of the same acid mixture".

Reference solution: Process the digestion procedure with the test solution, using the same amount of test specimen and the same procedure as directed above. In the section of test solution preparation, if the substance is a solid, only process to the step "Cool, dilute cautiously with a few mL of water.", and then add 2.0 mL of lead standard solution (equal to 0.02 mg of lead), and mix. Transfer to a 50-mL colorimetric tube, rinse the flask with water, adding the rinsing liquid to the tube until the volume is 25 mL, and mix.

Procedure: Treat each of the three tubes as described above. Using a pH meter or short-range pH indicator paper as external indicator, adjust the solution to a pH between 3.0 and 4.0 with ammonium hydroxide (a dilute ammonia solution may be used), dilute with water to 40 mL, and mix. Add 2 mL of pH 3.5 acetate buffer

to each tube, then add 1.2 mL of thioacetamide-glycerin base TS, dilute with water to 50 mL, mix, stand for 2 minutes, and view the tubes downward over a white paper: the test solution should appear a lighter color than the standard solution, and the color of reference solution is equal to or darker than that of the standard solution.

(3006) Determination of Arsenic (As)

This method, based on the color reaction between hydrogen arsenide and silver diethyldithiocarbamate to produce the red complex which can be determined arsenic limits of crude drugs tested by visually or spectrophotometrically. All the reagents applied in this method should be as lower as possible in arsenic content, except arsenic trioxide.

Apparatus: See illustration.

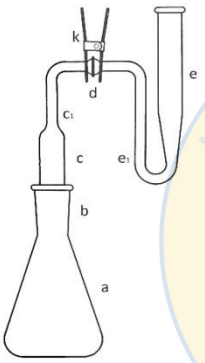

Arsenic Test Apparatus

a: arsine generator— a 125 ml conical flask.
b: frosted standard connector (24/40), constituted by a and c.
c: scrubber unit— the inner diameter is 25 mm.
c_1 and e_1: Glass tubes, the inner diameter is 2 mm and bent 90 degrees at the appropriate place.
d: rounded connector, constituted by c_1 and e_1.
e: absorber tube, 15 mL standard centrifuge tube.
k: retaining clip, forked. Insert c_1 and e_1 to stabilize d.

Standard arsenic solution: Take 132.0 mg of arsenic trioxide fine powder which is previously dried at 105℃ for 1 hour and weigh accurately, dissolve in 5 mL of sodium hydroxide solution (1 in 5) in a 1000-mL volumetric flask. Neutralize the solution with 10 mL dilute sulfuric acid, and add recently boiled and cooled water to volume, and mix (the procedure as above is the method to make stock solution). Transfer 10.0 mL of arsenic trioxide stock solution to a 1000-mL volumetric flask, and add 10 mL of 2N dilute sulfuric acid, add recently boiled and cooled water to volume, and mix. Each mL of standard arsenic solution contains 1.0 μg of arsenic (As). Keep this solution in an all-glass container with stopper, and use within 3 days.

Test solution preparation:

NOTE:
1. Some substances may explode violently when digested with hydrogen peroxide. Operate carefully, be cautious at all times.
2. If halogen-containing compounds are present, use a lower temperature while heating the test specimen with sulfuric acid, avoid boiling the mixture, before charring begins, and add the hydrogen peroxide carefully, to prevent loss of trivalent arsenic.

If non-specified in the monograph, take test specimen contained 10.0 μg of arsenic in a gas generating bottle. Add 5 mL of sulfuric acid and a few glass beads, and digest in a fume hood, until carbonization occurs. If necessary, add small amount of sulfuric acid to keep the test specimen moistened, but the total acid added is not more than 10 mL. Until the reaction complete, cool, carefully add 30 % hydrogen peroxide, after add the first drop and react completely, heat slightly, remove the burner, mix, then add the second drop, and repeat the procedure above. Slowly add the first few drops with sufficient mixing, in order to prevent a rapid reaction. Discontinue heating if foam becomes excessive. During the digestion, rotate the flask occasionally to prevent the specimen from caking on the glass bottom or glass wall. Maintain oxidizing conditions at all times during the digestion by adding small quantities of the hydrogen peroxide solution whenever the mixture turns brown or darken. Continue the digestion until the organic matter is digested completely, gradually raising the temperature of the hot plate until fumes of sulfur trioxide are copiously evolved, and the solution becomes colorless or only light yellow color. Cool, add 10 mL of water carefully, mix, and again evaporate to strong fuming, repeat this procedure to remove any trace of hydrogen peroxide. Cool, add 10 mL of water carefully, wash the sides of the flask with a few mL of water, and dilute with water to 35 mL as the test solution.

Procedure: To test specimen and standard, add 20 mL of dilute sulfuric acid (1 in 5), 2 mL of potassium iodide TS, 0.5 mL of stronger acid stannous chloride TS, mix, and stand at room temperature for 30 minutes. Pack the scrubber tube with two pledgets that have been soaked in saturated lead acetate solution and squeezed to dryness, leaving an interspace between the two pledgets, dried the tube in vacuum at room temperature. Transfer 3.0 mL of silver diethyldithiocarbamate TS to the absorber tube, add 3.0 g of granular zinc (No. 20 sieve) to the mixture in the flask, immediately connect the assembled scrubber unit, Place the flask in a water boiler at 25 ± 3℃, swirling the flask gently every 10 minute. After 45 minutes, transfer the absorbing solution to a 1-cm absorption cell, determine the absorbance at the wavelength of maximum absorbance in 525 nm, using silver diethyldithiocarbamate TS as the blank. The absorbance of the test solution is lower than the standard solution under the same monograph.

Interfering chemicals: Metals or salts of metals, such as chromium, cobalt, copper, mercury, molybdenum, nickel, palladium, silver may interfere the production of arsine. Antimony, which forms stibine, reacts with silver diethyldithiocarbamate TS and produces the color, but the absorbance of the color is at the wavelength of 525 nm, since at this wavelength the interference due to stibine is negligible.

(3007) Determination of Lead (Pb)

All reagents used in this method do not contain lead, and should be stored in borosilicate glasses. Rinse all glassware thoroughly with warm dilute nitric acid (1in2), and then rinse by water.

Solution preparation:

Ammonia-cyanide solution: Dissolve 2.0 g of potassium cyanide in 15 mL of concentrated ammonium hydroxide, and dilute with appropriate amount of water to 100 mL.

Ammonium citrate solution: Dissolve 40.0 g of citric acid in 90 mL of water. Add 2 or 3 drops of phenol red TS, then cautiously add concentrated ammonium hydroxide until the solution appears a reddish color. Remove any lead that may contain in the solution by extracting with dithizone extraction solution, 20-mL each time, until the dithizone solution retains orange-green color.

Diluted standard lead solution: Dilute 10 mL of standard lead solution containing 10.0 µg of lead per mL (General rule 3005), with dilute nitric acid to 100 mL (1 in 100) and obtain a diluted solution that contains 1.0 µg of lead per mL.

Dithizone extraction solution: Dissolve 30 mg of dithizone in 1000 mL of chloroform, and add 5 mL of alcohol. Store the solution in a refrigerator. Before use, shake a portion of the dithizone extraction solution with half portion of dilute nitric acid (1 in 100), discarding the nitric acid in the water layer.

Hydroxylamine hydrochloride solution: Dissolve 20.0 g of hydroxylamine hydrochloride in sufficient water to make approximately 65 mL. Transfer to a separator, add 5 drops of thymol blue TS, and add ammonium hydroxide until the solution appears a yellow color. Add 10 mL of sodium diethyldithiocarbamate solution (1 in 25), mix, and stand for 5 minutes. Extract this solution with successive 10~15 mL portions of chloroform, until a 5 mL portion of the chloroform extract does not appear a yellow color when shaken with cupric sulfate TS. Add 3N dilute hydrochloric acid until the solution is pink, if necessary, add one to two drops of thymol blue TS, and then dilute with water to 100 mL.

Potassium cyanide solution: Dissolve 50.0 g of potassium cyanide in sufficient water to make 100 mL. Remove the lead from this solution by extraction with successive portions of dithizone extraction solution, follow the method as described under ammonium citrate solution above, then extract any dithizone remaining in the cyanide solution by shaking with chloroform. Finally dilute the cyanide solution with sufficient water so that each 100 mL contains 10.0 g of potassium cyanide.

Standard dithizone solution: Dissolve 10.0 mg of dithizone in 1000 mL of chloroform. Keep the solution in a glass-stopper, lead-free bottle, suitably wrapped to protect it from light, and store in a refrigerator.

NOTE: The special reagents are used for the determination of lead in ferrous sulfate.

Potassium cyanide citrate: Add 50 mL of ammonium citrate and 4 mL of potassium cyanide to 50 mL of water, then well mix. Adjust to pH 9 by concentrated ammonium hydroxide, if necessary.

pH 2.5 buffer solution: Add 37.0 mL of 0.1 N hydrochloric acid to 25.0 mL of 0.2 M potassium hydrogen phthalate solution, add water to 100 mL.

Dithizone-carbon tetrachloride solution: Dissolve 10.0 mg of dithizone in 1000 mL carbon tetrachloride. The solution can only use one day.

pH 2.5 lotion: Take 500 mL of dilute nitric acid(1 in 100), adjust to pH 2.5 by adding ammonia solution, then add 10 mL of pH 2.5 buffer solution, mix.

Ammonia-cyanide lotion: Add 4 mL of ammonia-cyanide solution to 35 mL of pH 2.5 lotion, mix.

Test solution preparation: Unless otherwise directed in the monographs, prepare a test preparation as follows:

Caution— operate in this procedure carefully, as some substances may explosive violently when digested with hydrogen peroxide. Transfer 1.0 g of the test specimen to a suitable flask, add 5 mL of sulfuric acid and a few glass beads, and digest on a hot plate in a hood until charring begins. Other suitable means of heating may be substituted. Add additional sulfuric acid, if necessary, to wet the test specimen completely, but do not add more than a total of 10 mL. After the reaction finished, cool, drop 30% hydrogen peroxide with caution, after first drop reacts completely, heat gently, stop the heat, shake, and then add second drop, repeat the procedure carefully. Add the first few drops very slow, mix carefully to prevent a rapid reaction, and discontinue heating if foaming becomes excessive. Swirl the solution to prevent unreacted substance from caking on the walls or bottom of the flask. Add peroxide whenever the mixture

turns brown or darkens. Continue the digestion until the substance is completely decomposed and produced copious fumes of sulfur trioxide, and the solution is colorless or slightly yellow, and cool.

Procedure: Place the test solution in a separator, unless otherwise directed in the monograph, operate as described below: add 6 mL of ammonium citrate solution and 2 mL of hydroxylamine hydrochloride solution. For the determination of lead in iron salts use 10 mL of ammonium citrate solution. Add 2 drops of phenol red TS, and make the solution alkaline in red color by the addition of ammonium hydroxide. Cool the solution if necessary, and add 2 mL of potassium cyanide solution, immediately extract the solution with 5 mL portions of dithizone extraction solution several times, until the dithizone solution retains in green color, draining off each extract into another separator. Shake the combined dithizone solutions for 30 seconds with 20 mL of dilute nitric acid (1 in 100), and discard the chloroform layer. Add 5.0 mL of standard dithizone solution and 4 mL of ammonia-cyanide solution to the acid solution, and shake for 30 seconds: the color of the chloroform layer is violet which is not darker than the control solution under examination. The control solution is made with a volume of diluted standard lead solution (the lead content is equivalent to the lead limit in the test specimen).

(3010) Determination of Water Content

I. Karl Fischer's method:

Test specimen titrates with Karl Fisher's reagent to decide the water content, Karl Fisher's reagents containing iodine, sulfur dioxide, pyridine and methanol, the titration reaction as follow:

$$H_2O + I_2 + SO_2 + 3C_5H_5N \rightarrow 2(C_5H_5N^+H)I^- + C_5H_5N \bullet SO_3$$

$$C_5H_5N \bullet SO_3 + CH_3OH \rightarrow (C_5H_5N^+H)O^- \bullet SO_2 \bullet OCH_3$$

Though Fischer reagent is quite sensitive water, any apparatus which may be used should provide adequate exclusion from atmospheric moisture and determine the endpoint of a colorless solution that is titrated directly, the endpoint may be observed visually in the color change from canary yellow to amber. More commonly, however, the endpoint is determined electrometrically with an apparatus, employing a simple electrical circuit that serves to impress suitable potential difference (about 200 mV) of applied potential between a pair of platinum electrodes (area 5 mm^2, distance 2.5 cm), immersed in the solution which be titrated. At the endpoint of the titration, a slightly excess of the reagent increases the flow of current to between 50~150 microamperes for 30 seconds to 30 minutes.

Commercially available apparatus generally comprises a closed system consisting of one or two automatic burette and a tightly covered titration vessel fitted with the necessary electrodes and a magnetic stirrer. All gas in apparatus passed through the desiccant, such as phosphorus pentoxide for removing moisture.

Fischer reagent: Prepare the Karl Fischer reagent as follows. Add 125.0 g of iodine to a solution containing 670 mL of methanol and 170 mL of pyridine, and cool. Place 100 mL of pyridine in a 250-mL graduated cylinder and keeping the pyridine cold in an ice bath, pass in dry sulfur dioxide until the volume reaches 200 mL. Slowly add the solution to the cooled iodine mixture. Shake to dissolve the iodine, transfer the solution to the apparatus, and allow the solution to stand overnight before standardizing. One mL of this solution when freshly prepared is equivalent to approximately 5 mg of water, but it deteriorates gradually, therefore, standardize it within 1 hour before use, or daily if in continuous use. Preserve in a light-resistant and well closed container, and store in a cool and dark place. The reagents can be diluted with methanol or ethylene glycol monomethyl ether, if necessary.

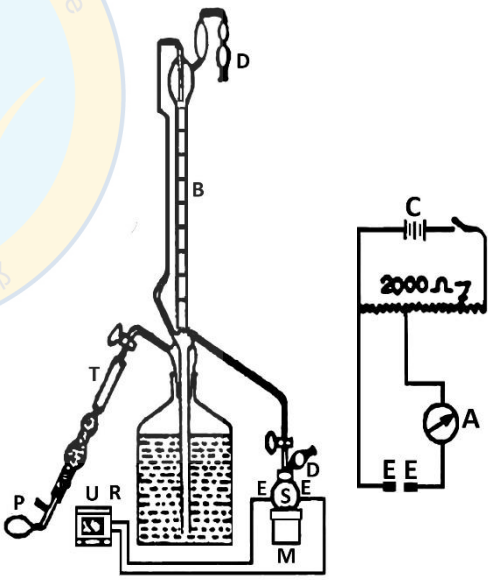

Automatic Titration Apparatus

B: burette
P: pressurized ball
U: endpoint indicator
C: DC current
M: electromagnetic stirrer
T: rubber tube
E: platinum electrode
S: churn staff
A: micro ampere meter
D: desiccant
R: Fischer reagent storage bottle

Standardization of the reagent: Take 40 mL of methanol in a conical flask, add Karl Fisher reagent to give the characteristic endpoint color or the microampere meter present at 100±50 of microampere direct current.

1. For determination of trace amounts of water (less than 1%). Sodium tartrate dehydrate ($C_4H_4Na_2O_6 \cdot 2H_2O$) may be used as the water

reference substance. Quickly add accurately weighed 150~350 mg of sodium tartrate dihydrate, and titrate to the endpoint. The water equivalency factor F, in mg of water per mL of reagent is given by the formula:

$$F=0.1566\times\frac{W}{V}$$

F: water equivalency factor, in mg of water per mL of reagent.
W: weight of sodium tartrate dihydrate in mg.
V: volume of sodium tartrate dihydrate consumed in the second titration in mL.

2. For the precise determination of significant amounts of water (1% or more), use purified water as the reference substance. Quickly add accurately weighed 25~250 mg of water. Titrate to the endpoint. Calculate the water equivalency factor F in mg of water per mL of reagent by the formula below:

$$F=\frac{W}{V}$$

F: water equivalency factor, in mg of water per mL of reagent.
W: weight of water in mg.
V: volume of the reagent required in mL.

Procedure: Unless otherwise directed, transfer 40 mL of methanol to the titration vessel, ensuring that the volume is sufficient to cover the electrodes, and titrate with the Karl Fisher's reagent to the visual endpoint. Disregard the volume consumed, since it does not enter into the calculations. Quickly add the test preparation which contains 10~250 mg of test specimen, mix and titrate with the Karl Fisher's reagent to visual endpoint. Calculate the water content of the specimen by the formula below:

$$M=S\times F$$

M: water content of the specimen in mg.
S: volume of the Karl Fisher's reagent consumed in the second titration in mL.
F: water equivalency factor in mg of water per mL of reagent.

The residual titration procedure is applicable on avoiding the difficulties that may be encountered in the direct titration of substances, add excess Karl Fischer's reagent, and titrated with standard methanol solution.
Standard Methanol, anhydrous Solution: Place 2.0 mL of water at 20~25℃ in a dried 1000-mL of volumetric flask, dilute with absolute methanol to 1000 mL. Preserve the sufficient quantity of methanol, used for the blank tests.

II. Toluene distillation method:

Apparatus: Take a 500-mL glass flask A, connected with a trap B to a reflux condenser C by ground glass joints (see figure). The trap is 235~240 mm in length. The receiving tube E with 5-mL capacity, and its cylindrical portion, 146~156 mm in length, 7~8 mm in diameter, graduate is in 0.1 mL subdivisions, so the error of reading is not greater than 0.05 mL for any indicated volume. The distance between the connecting tube D and the receiving tube E is about 45~55 mm, the connecting tube D is 10~12 mm in internal diameter. The condenser in the straight-tube is approximately 400 mm in length and 8~10 mm in bore diameter. The upper portion of the flask and the connecting tube D may be insulated by asbestos. The source of heat is preferably an electric heater with rheostat control or an oil bath. Clean the receiving tube and the condenser with chromic acid cleansing mixture, thoroughly rinse with water, and dry in an oven. Prepare the toluene to be used by first shaking with a small quantity of water, separating the excess water, and distilling the toluene.

Procedure: Place an accurately weighed quantity of the substance in the dry flask, which is expected to yield 2~4 mL of water. If the substance is of a pasty character, weigh it in a boat of metal foil of a size that will just pass through the neck of the flask. If the substance is likely to cause bumping, add enough dry, washed sand to cover the bottom of the flask or a number of capillary melting-point tubes, about 100 mm in length, sealed at the upper end. Place about 200 mL of toluene in the flask, connect the apparatus, and fill the receiving tube with toluene poured through the top of the condenser. Heat the flask gently for 15 minutes, when the toluene begins to boil, distill at the rate of about 2 drops per second, until most of the water is distilled, increase the rate of distillation to about 4 drops per second. When the water has apparently all distilled over, rinse the inner side of the condenser tube with toluene while brushing down the tube with a tube brush attached to a copper wire and saturated with toluene. Continue the distillation for 5 minutes, then remove the heat, and allow the receiving tube to cool to room temperature. If any droplets of water adhere to the walls of the receiving tube, scrub them down with a brush consisting of a rubber band wrapped around a copper wire and wetted with toluene. When the water and toluene have separated completely, read the volume of water, and calculate the percentage that was present in the substance.

(3033) Determination of General Impurities

The method used for measuring the general impurities in medicine by thin layer chromatography (TLC). Unless otherwise directed, follow the method as described below.

Test solution: Weigh accurately a quantity of the test specimen, and dissolve it in the monograph specified solvent. The final concentration which is known accurately is equivalent to 10 mg per mL. (Heat or sonication may be used to help dissolve the test

specimen, while use such method does not negatively affect the substance.)

Standard solution: Weigh accurately a quantity of the control standard or specified substance, and dissolve it in the monograph specified solvent. Each final concentration which is known accurately is equivalent to 0.01 mg, 0.05 mg, 0.1 mg, and 0.2 mg per mL. (Heat or sonication may be used to dissolve the test specimen, while use such method does not negatively affect the substance.)

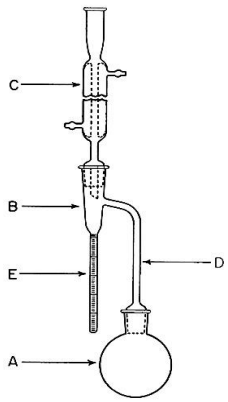

A: 500-mL flask

B: trap

C: reflux condenser

D: connecting tube

Toluene Moisture Apparatus

Procedure: Use a thin-layer chromatographic plate coated with a 0.25-mm layer of chromatographic silica gel mixture. Take equal quantity of test solution and each standard solution (20 μL), separately deposit on the silica gel thin-layer by thin-layer chromatography, after dried under nitrogen flow, applied the mobile phase solution in the monograph specified, allow the chromatogram to develop in a chromatographic chamber which is filled with the saturated vapor of the solvent, until the solvent front has moved about three-fourths of the length to the plate remove the chromatographic plate from the chamber and air-dry it. Under the monograph specified, view the plate with the solutions, reagents, sprays by the spray method or the other ways: if any spots of test solution appear different from the principal spots, compare with the principal spots in chromatograms, and determine their impurities. Unless otherwise directed, the general impurities of spots do not exceeding 2.0 %.

Localization of spots:

1. Detect under the UV light: Wavelength 254 nm and 365 nm.
2. Detect by the spray of iodoplatinate TS.
3. Acidified potassium-bismuth iodide solution: For stock solution preparation, take 850 mg of bismuth subnitrate, add 40 mL of water and 10 mL of glacial acetic acid and mix, add a solution which is made of 20 mL and 8.0 g of potassium iodide, mix well, as a stock solution; can be stored in a brown bottle for several months. For spray preparation, take 10 mL of stock solution, add 20 mL of glacial acetic acid, dilute it with water to 100 mL, and mix well.
4. Ninhydrin spray: Dissolve 200 mg of ninhydrin in 100 mL of ethanol. After spraying it on the chromatographic plate, heat and detect it.
5. Acid spray: Place 90 mL of ethanol in an ice kettle, stirring carefully and slowly add 10 mL of sulfuric acid, mix well. After spraying it on the chromatographic plate, heat until it carbonized, then examine.
6. Acidified dichromate spray: Dissolve sufficient amount of potassium dichromate in 100 mL of sulfuric acid and saturate it. After spraying it on the chromatographic plate, heat until it carbonized, then examine.
7. Vanillin solution: Dissolve 1.0 g of vanillin in 100 mL of sulfuric acid.
8. Chloramine-T-trichloroacetic acid: Mix 10 mL of 3 % Chloramine-T aqueous solution with 40 mL of 25 % ethyl trichloroacetate solution. Prepare it freshly before use.
9. Folin-C solution: Take 70 mL of water, add 10.0 g of sodium tungstate and 2.5 g of sodium molybdate, add 5 mL of 85 % hydrogen phosphate and 10 mL of 36 % hydrochloric acid, reflex and heat for 10 hours.
10. Potassium permanganate solution: Dissolve 100 mg of potassium permanganate in 100 mL of water.
11. DAB: 1.0 g of *p*-dimethylaminobenzaldehyde, mix with 100 mL of 0.6N hydrochloric acid.
12. DAC: 100 mg of 4-(dimethylamino) cinnamaldehyde, mix with 100 mL of 1N hydrochloric acid.
13. Ferricyanide solution: Mix equal volume of 1% ferric chloride and 1% potassium ferricyanide, use immediately.
14. Fast Blue B-Reagent (A): Dissolve 500 mg of fast blue B in 100 mL of water. Reagent (B) 0.1 N sodium hydroxide solution. First spray the (A) reagent, and then spray the (B) reagent.
15. Alkaline ferricyanide solution: Dilute 1.5 mL of 1 % potassium ferricyanide with water to 20 mL, add 10 mL of 15 % sodium hydroxide and mix.
16. Iodine spray: Dissolve a quantity of iodine in chloroform and become 0.5 % solution.
17. Place iodine crystals on the bottom of the developing chamber, capped, allow the chamber saturating with iodine steam. Place chromatographic plate into the chamber for 10 minutes, allow the spots appearing.
18. Solution (A): Dissolve 500 mg of potassium iodide in 50 mL of water. Solution (B): Dissolve 500 mg of soluble starch in 50 mL of hot water. Before use, mix equal volumes of solution (A) and solution (B).
19. PTSS: Dissolve 20.0 g of *p*-toluenesulfonic acid in 100 mL of ethanol, after spraying on the chromatographic plate, dry for 15 minutes at 100 ℃, detect it under the UV light at 365 nm.

20. *o*-Tolidine spray: Dissolve 160 mg of *o*-tolidine in 30 mL of glacial acetic acid, dilute with water to 500 mL, add 1.0 g of potassium iodide, mix until completely dissolve.
21. To 3 mL of chloroplatinic (1 in 10), add 97 mL of water, add 100 mL of potassium iodide solution (6 in 100) as the spray reagent.
22. Iodine-methanol spray: Mix the equal volume of iodine TS solution and methanol.

(3049) Determination of Inductively Coupled Plasma (ICP)

I. Inductively coupled plasma-optical emission spectrometry

Inductively coupled plasma-atomic emission spectrometry is used for the measurement of the content of cadmium, lead, mercury, arsenic, or other total heavy metals which may possible exist in Chinese herbs.
The high temperature argon plasma is produced by the high-frequency electromagnetic induction, heat the imported test specimen, apply a series of reactions, like desolvation, decomposition, and atomization/ionization, excited the elements in the plasma, emitted specific emission spectral lines, measure the content by the photo detector.

Apparatus:
1. Inductively coupled plasma optical emission spectrometer
2. Microwave digestion system

Preparation of internal standard solution: Measure accurately 5 mL of gold standard solution (1000 μg/mL), dilute with 1 % nitric acid to 50 mL constant volume, and transfer to a graduated bottle, as an internal standard stock solution. Before use, dilute 5 mL of internal standard stock solution with 1 % nitric acid to 50 mL, transfer it to a graduated bottle use as an internal standard solution (containing gold 10μg/mL).

Preparation of standard solution: Measure accurately 1 mL of lead, cadmium, arsenic, and mercury in a 100 mL volumetric flask, dilute with 1 % nitric acid to constant volume, transfer to a graduated bottle, as a standard stock solution. Before use, take a quantity of standard stock solution, add the internal standard solution, dilute with 1 % nitric acid to 10~500 ng/mL (containing gold 100 ng/mL) transfer it to a graduated bottle, use as a standard solution.

Test solution preparation: Weigh accurately 0.2~0.5 g of test specimen, place it in a high pressure microwave digestion bottle, add 6 mL of nitric acid and 1.5 mL of hydrogen peroxide, digest it in a microwave digestion bottle, after digest complete, add 0.2 mL of internal standard solution, dilute with deionized water to 20 mL constant volume, use as a test solution.

Procedure:
1. Calibration curve: Introduce a series of standard solution with different concentration in an inductively coupled plasma-atomic emission spectrometer, and make the calibration curve.
2. Quantitation of the test solution: Introduce the test specimen in inductively coupled plasma optical emission spectrometer to test, apply the calibration carve and determine the content of lead, cadmium, arsenic and mercury (ppm) by using the equation below.

The content of lead, cadmium, arsenic and mercury in the test solution =

$$\frac{C \times V}{M \times 1000}$$

C: concentration of lead, cadmium, arsenic, and mercury in the test solution by calibration curve. (ng/mL)
V: final volume of the test (mL)
M: weight of the test (g)

II. Inductively coupled plasma-mass spectrometry

Coupled plasma-mass spectrometry is used for the measurement of the content of lead, cadmium, arsenic, copper, mercury, or other total heavy metals.
The high temperature argon plasma is produced by the high frequency electromagnetic induction, heat the imported test specimen, apply a series of reactions, like desolvation, decomposition, and atomization/ionization, the elements in a plasma change into monovalent cation, measure the content by passing through the vacuum interface and transferring it into mass spectrometer.

Apparatus:
1. Inductively coupled plasma-mass spectrometer
2. Microwave digestion System

Preparation of internal standard solution: Measure accurately 0.5 mL of rhodium standard (1000 μg/mL) and 5 mL of gold standard solution (1000 μg/mL), dilute it with 1 % nitric acid to 50 mL, and transfer it to a graduated bottle, as an internal standard stock solution. Before use, dilute 5 mL of internal standard solution with 1 % nitric acid to 50 mL, transfer it to a graduated bottle, use as an internal standard solution (content rhodium 1 μg/mL and gold 10 μg/mL).

Preparation of standard solution: Measure accurately 1 mL of lead, cadmium, arsenic, copper and mercury in a 100-mL volumetric flask, dilute it with 1 % nitric acid to constant volume, move it to a graduated bottle, as a standard stock solution. Before use, take appropriate quantity of standard stock solution, add the internal standard solution, dilute it with 1 % nitric acid to 1~10 ng/mL (content rhodium 10 μg/mL and gold 100 μg/mL), transfer it to a graduated bottle, use as a standard solution.

Test solution preparation: Weigh accurately 0.2~0.5 g of test specimen, place it in a high pressure microwave digestion bottle, add 6 mL of nitric acid and 1.5 mL of hydrogen peroxide, digest it in a microwave digestion bottle, after digestion, add 0.2 mL of internal standard solution, dilute with deionized water to 20 mL, use it as a test solution.

Procedure:

1. Calibration curve: Introduce a set of standard solution with different concentrations series in an inductively coupled plasma-mass spectrometer, and make the calibration curve.
2. Quantitation of the test solution: Introduce and determine test specimen in inductively coupled plasma-mass emission spectrometer, apply the calibration carve and determine the content of lead, cadmium, arsenic, copper and mercury (ppm) by using the equation below.

The content of lead, cadmium, arsenic, copper and mercury in the test solution =

$$\frac{C \times V}{M \times 1000}$$

C: concentration of lead, cadmium, arsenic, copper and mercury (ng/ml) in the test solution by calibration curve.
V: final volume of the test specimen (mL)
M: weight of the test specimen (g)

(3050) Determination of Atomic Absorption Spectrometry (AAS)

I. Graphite furnace atomic absorption spectrometry

Measure the herbal medicines content of cadmium, lead, mercury, arsenic or other total heavy metals by graphite furnace atomic absorption spectrometry.
Heat the test specimen liquid by electrothermal process in a graphite furnace, through the processes of desolvation, ashing and atomization. The element which is waited to analyze atomized in the graphite furnace atomic. The radiation beam from specified elements which is in excited state pass through the graphite furnace, the beam produced by a hollow cathode lamp or an electrodeless discharge lamp. The concentration of test element is calculated by the change amount of incident light specified intensity.

Apparatus:

1. Graphite furnace atomizer
2. Ashing furnace
3. Electric heating plate
4. Microwave digestion apparatus

Matrix modifier:

1. Matrix modifier I: Mix 1000 μg/mL of palladium solution with 600 μg/mL of magnesium nitrate.
2. Matrix modifier II: A mixed solution with 10000 μg/mL of ammonium dihydrogen orthophosphate and 500 μg/mL of magnesium nitrate.

Preparation of standard solution: Weigh accurately 1 mL of lead, cadmium and arsenic, place in a 100 mL volumetric flask, add 1 % nitric acid to constant volume, transfer to a graduated bottle, as a stock standard solution, dilute cadmium to 0.5~2.0 ng/mL, lead and arsenic to 10~50 ng/mL with 1 % nitric acid, serve those as a standard solution.

Test solution preparation:

1. Dry digestion method: Apply for testing the lead and cadmium. Place 1.0~5.0 g of test specimen in a crucible, weigh accurately, heat to carbonized at a electric hot plate, transfer to an ashing furnace and ash at 450℃ for 3~5 hours. If ashing incompletely, allow it to cool, add 0.5~3 mL of nitric acid, dry on an electric hot plate, transfer to an ashing furnace and ash at 450℃ for 3~5 hours, repeat the operation until the color of ash change to white. Allow to cool and dissolve in 5 mL of 1 N nitric acid with heat, add deionized water to constant volume 20 mL, serve as a the test solution.
2. Acid digestion method: Apply for testing the lead, cadmium and arsenic. Weigh accurately 0.5~1 g of the test specimen, place it in digestion bottle, add 10 mL of nitric acid, heat and digest at 60℃ for 30 minutes on an electric hot plate, and elevate the temperature to 95℃, digest the solution until it is clear, allow it to cool, add deionized water to constant volume 20 mL, serve as a test solution.
3. Acid digestion method by microwave: Suitable for testing lead, cadmium and arsenic. Weigh accurately 0.2~0.5 g of specimen in a high pressure microwave digestion bottle, add 6 mL of nitric acid and 1.5 mL of hydrogen peroxide, digest in a microwave digestion equipment, after the digestion complete, add deionized water to constant volume 20 mL, serve as the test solution.

Procedure:

1. Calibration curve: Weigh accurately 20 μL of a series of standard solution with different concentration, add 2 μL of matrix modifier respectively (If the test specimen is arsenic, use matrix modifier I. If the test specimen is lead or cadmium, use matrix modifier II), inject in the graphite furnace atomizer respectively and make a calibration curve.
2. Quantitation of test solution: Weigh accurately 20 μL of test solution, add 2 μL of matrix modifier (If the test specimen is arsenic, use matrix modifier I. If the test specimen is lead or cadmium, use matrix modifier II), inject in the graphite furnace atomizer, substituted into calibration curve, and calculate the content of lead, cadmium and arsenic (ppm) in the test specimen as follow.

The content of lead, cadmium and arsenic in the test specimen (ppm) =

$$\frac{C \times V}{M \times 1000}$$

C: concentration of lead, cadmium and arsenic in the test specimen by the calibration curve (ng/mL).
V: final constant volume of the test solution (mL).
M: weight of the test sample (g).

II. Hydride generation atomic absorption spectroscopy

Measure the content of arsenic or other total heavy metals in the herbal medicines by hydride generation atomic absorption spectrometry.
Use the selective chemical reduction, arsenic in the test solution is reduced to hydride and separated, then import the sample into the quartz tube, measured by an atomic absorption spectrometer.

Apparatus:
1. Atomic absorption spectrometer
2. Hydrogenation equipment
3. Electric hot plate
4. Microwave digestion system

Preparation of reactant:
1. Sodium borohydride solution: Dissolve 5.0 g of sodium hydroxide and 5.0 g of sodium borohydride in deionized water to 500 mL constant volume.
2. 30% (v/v) Hydrochloric acid: Take 300 mL of hydrochloric acid, dilute with deionized water to 1000 mL constant volume.
3. 40% potassium iodide solution: Dissolve 20.0 g of potassium iodide in deionized water to 50 mL constant volume.

Preparation of standard solution: Weigh accurately 1 mL of standard substance, place in a 100-mL volumetric flask, make it to the constant volume with 1 % nitric acid, transfer to a graduated bottle as a stock standard solution. Before use, take a quantity of stock standard solution, dilute it with 1 % nitric acid to 1~10 ng/mL, serve as a standard solution.

Test solution preparation:
1. Acid digestion method: Weigh accurately 0.5~1.0 g of the test specimen, place it in digestion bottle, add 10 mL of nitric acid, heat on an electric hot plate at 60℃ for 30 minutes then elevate the temperature to 95℃. Heat and digest the solution until it is clear, heat until remained acid to approximately 1 mL, allow it to cool, add deionized water to 20 mL constant volume, serve as a test solution.
2. Acid digestion method by microwave: Weigh accurately 0.2~0.5 g of specimen, put it in a high pressure microwave digestion bottle, add 6 mL of nitric acid and 1.5 mL of hydrogen peroxide, digest in a microwave digestion system. After the digestion, heat until the remained acid to approximately 1 mL, allow it to cool, add 10 % hydrochloric acid to 20 mL constant volume, serve as a the test solution.

Procedure:
1. C Calibration curve: Take a series of standard solutions with different concentration 10 mL, add 10 mL of 30% (v/v) hydrochloric acid and 1 mL of 40 % potassium iodide, react in the dark for 1 hour. Respectively inject in the hydrogenation equipment, which reacts with sodium borohydride gives production of hydride. Hydride is measured by atomic absorption spectrometer to obtain a calibration curve.
2. Quantitation of test solution: Take 10 mL of test solution, add 10 mL of 30% (v/v) hydrochloric acid and 1 mL of 40 % potassium iodide, react in dark for 1 hour. Respectively inject in the hydrogenation equipment, which reacts with sodium borohydride gives production of hydride. Hydride is measured by atomic absorption spectrometer, substituted into calibration curve and calculated the content of arsenic in the test specimen (ppm) as follow.

The content of arsenic in the test specimen (ppm) =

$$\frac{C \times V}{M \times 1000}$$

C: concentration of arsenic in the test solution by the calibration curve (ng/mL).
V: final constant volume of the test specimen (mL).
M: weight of the test specimen (g).

III. Cold-Vapor atomic absorption spectroscopy

Cold-vapor atomic absorption spectrometry is used for the measurement of the content of mercury or other total heavy metals in the herbal medicines.
Use the selective chemical reduction, the mercury in digestion liquid of the test specimen is reduced to mercury vapor, then import the sample into quartz tube, measured by an atomic absorption spectrometer.

Apparatus:
1. Atomic absorption spectrometer
2. Cold vapor generation device
3. Microwave digestion system

Preparation of reactants:
1. 10% (v/v) hydrochloric acid: Take 100 mL of hydrochloric acid, add deionized water to 1000 mL constant volume.
2. Stannous chloride solution: Dissolve 10 g of stannous chloride in 10% (v/v) hydrochloric acid to 500 mL constant volume.

Preparation of standard solution: Weigh accurately 1 mL of standard specimen, place in a 100-mL volumetric flask, add 1 % nitric acid to constant volume, transfer to

graduated bottle as a stock standard solution. Before use, take a quantity of stock standard solution, dilute it with 1 % nitric acid to 1~10 ng/mL constant volume, serve as a standard solution.

Test solution preparation: Weigh accurately 0.2~0.5 g of test specimen, put it in a high pressure microwave digestion bottle, add 6 mL of nitric acid and 1.5 mL of hydrogen peroxide, digest in a microwave digestion system. After the digestion, add deionized water to 50 mL constant volume, serve as the test solution.

Procedure:

1. Calibration curve: Take a series of standard solutions with different concentration, respectively inject in the cold vapor generation device, which reacts with stannous chloride and gives production of mercury vapor. Measure the mercury vapor by atomic absorption spectrometer and make a calibration curve.
2. Quantitation of test solution: Inject the test solution in the cold vapor generation device respectively, which reacts with stannous chloride and gives production of mercury vapor. Measure the mercury vapor by atomic absorption spectrometer, substituted into calibration curve, and calculate the content of mercury in the test specimen (ppm) as follow.

The content of mercury in the test specimen (ppm) =

$$\frac{C \times V}{M \times 1000}$$

C: concentration of mercury in the test specimen by the calibration curve (ng/mL).
V: final constant volume of the test specimen (mL).
M: weight of the test specimen (g).

(3051) Determination of Residue of Sulfur Dioxide

Method: Alkali Titration Method

Apparatus: Ventilation distillation apparatus

Reagents:

1. Hydrogen peroxide, phosphoric acid is guarantee grade reagents. Methyl red, methylene blue, ethanol, sodium hydroxide are chemical pure grade.
2. Water: Dechlorinated by boiling, use immediately after it cooled.
3. Mixed indicator: Dissolve 0.2 g of methyl red and 0.1 g of methylene blue in ethanol to 100 mL.
4. 0.3 % Hydrogen peroxide: Dissolve 1 mL of 30% hydrogen peroxide in water to 100 mL. Freshly prepared before use.
5. 0.1N and 0.01 N sodium hydroxide solution, and freshly prepared before use.

Preparation of the sample solution: Fine-cut the solid sample (less 2mm), weigh accurately a quantity of 1.0~5.0 g, add 20 mL of water. Weigh 20.0 g of the liquid sample, place it in a 100 mL round-bottom flask (B), and add 2 mL of ethanol, 2 drops of silicon oil and 10 mL of 25 % phosphoric acid, rapidly connect the apparatus. Add 10 mL of 0.3% hydrogen peroxide in (A) flask, add 3 drops of the mixed indicator (the color change to violet), add 1~2 drops of 0.01 N sodium hydroxide until the color of the solution change to olive green, connect the apparatus. Adjust the (C) part, the nitrogen pass through at rate of 0.5~0.6 L/min, the flame of microburner is the height of 4 ~5 cm, heat the (B) flask for 10 minutes, remove the flask (A). Wash the tip of glass tube with small amount of water into flask (A), serve as the sample solution.

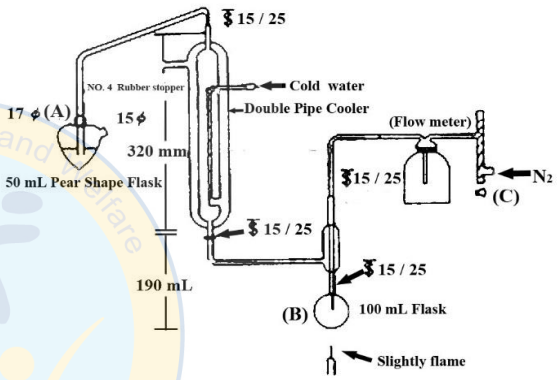

Distillation Apparatus

Assay: The sample solution prepared above is titrated with 0.01N sodium hydroxide, until the color of the solution changes to olive green, make a blank test, and determine the content of sulfur dioxide in the solution.
0.01 N sodium hydroxide 1 mL= 0.32 mg of SO_2.

(3052) Determination of Pesticides Residues

The method is used gas chromatographic for the determination the total amount of BHC, DDT, PCNB, organochlorine pesticides residue in herbal medicines.

Test solution: Weigh accurately 20 g of sample powder, place it in a stirring flask, add 80 mL of water and mix, stand for 20 minutes. Add 200 mL of acetonitrile, high speed stirring for 1 minute, pour it in a Buchner funnel with filter paper, suction filtration in a covered glass cylinder (500-mL), rinse the residue with acetonitrile, combine the filtrate, and add acetonitrile to 350 mL constant volume. Take 100 mL of the filtrate in a covered glass cylinder (150 mL), add 15.0 g of sodium chloride and shake 1 minute, stand 20 minutes for layer separation, record the volume of acetonitrile in the upper layer (V_1 mL). Take 10 mL of the upper filtrate, dry under nitrogen gas at 40℃ until slightly dry, dissolve in 2 mL of *n*-hexane, inject in florisil cartridge which is advance moistened by 5 mL of the mixture of

acetone and *n*-hexane (1:9, v/v), for solid phase extraction, elute twice with 5 mL of the mixture of acetone and *n*-hexane (1:9, v/v), collect the eluent in a glass tube, dry under nitrogen gas at 40℃ until slightly dry, dissolve it in *n*-hexane to constant volume 2 mL, as the sample solution.

Standard Solution: Take 100 mg of each standard pesticides: α-BHC, β-BHC, γ-BHC, δ-BHC, o,p'-DDT, p,p'-DDT, p,p'-DDD, p,p'-DDE, PCNB, pentachloroaniline and methyl pentachloro-phenyl sulphide, weigh accurately, dissolve respectively in *n*-hexane to constant volume 100 mL as a standard stock solutions. Mix a quantity of each standard stock solution, dilute with *n*-hexane to a suitable concentration, and serve as a standard solution.

Assay: Take 2 μL of each sample solution and standard solution, measure it by GC, compare and identify standard solutions and sample solutions by the retention time of the peaks. Make a calibration curve by examining the standard solutions as described above, and then use the equation below to determine the content of each pesticide and the total quantity of BHC, DDT and PCNB.

Content of pesticides residue in sample (ppm) =

$$C \times \frac{V_2}{10} \times \frac{V_1 \times 350}{100 \times W}$$

C: the concentrations of each pesticides residue by calibration curve of each pesticide (μg/mL).
V_1: after adding NaCl, record the volume of acetonitrile layer (mL).
V_2: final constant volume of the sample (2 mL).
W: the weight of the sample (20.0 g).

- Total content of BHC = the content of α-BHC (ppm) ＋ the content of β-BHC (ppm) ＋the content of γ-BHC (ppm) ＋the content of δ-BHC (ppm).
- Total content of DDT = the content of o,p'-DDT (ppm) ＋the content of p,p'-DDT (ppm) ＋the content of p,p'-DDD (ppm) ＋the content of p,p'-DDE (ppm).
- Total content of PCNB = the content of PCNB (ppm) ＋ the content of pentachloroaniline (ppm) ＋ the content of methyl pentachlorophenyl sulphide (ppm).

Identification test: Pesticides containing organochlorine required reexamination by using gas chromatography-mass spectrometry for confirmation analysis.

1. Reference conditions for gas chromatography determination:
   - Detector: Electron Capture Detector, ECD
   - Column: Silica capillary column, inner diameter is 0.53 mm, length is 30 m, the inner wall coating with 5% Phenyl-methylpolysiloxane whose thickness is 1.50 μm, or other column, inner diameter is 0.53 mm, length is 30 m, the inner wall coating with 35% Phenyl methylpolysiloxane, thickness is 0.83 μm.
   - Column temperature: After injection, maintain in 210℃ for 6 minutes, and then raise to 270℃ with the rate of 8℃ per minute , keep 25 minutes.
   - Detector temperature: 300℃.
   - Injection temperature: 250℃.
   - Carried gas: He, 6 mL/min.
   - Auxiliary gas: N_2, 25 mL/min.
2. Reference conditions for gas chromatography mass spectrometry:
   - Analyzer: Ion Trap Analyzer or Quadruple Analyzer.
   - Column: Silica capillary column, inner diameter is 0.25 mm, length is 30 m, and the inner wall coating is 0.25 μm of 5% Phenyl dimethylpolysiloxane.
   - Column temperature: After injection, keep in 50℃ for 1 minute, raise to 270℃ with the rate of 20℃ per minute , keep 13 minutes
   - Injector temperature: 250℃.
   - GC/MS interfacial temperature: 250℃.
   - Ion Trap Analyzer temperature: 180℃, or Quadruple Analyzer temperature: 20℃.
   - Carried gas: He, 0.8 mL/min.
   - Mass range: 50~500 amu.

(3053) Determination of Aflatoxins (Mycotoxins)

The method is used high performance liquid chromatography for the determination of aflatoxin (calculated the total amount of aflatoxin B_1, aflatoxin B_2, aflatoxin G_1, aflatoxin G_2) in herbal medicines.

Solvent of mobile phase: Mix water and methanol at the ratio of 55: 45 (v/v), filter by filter membrane, take the filtrate as the solvent for mobile phase.

Standard solution: Take 1 mL of a mixed reference standard (marked concentration at 1000 ng/mL of aflatoxin B_1, 300 ng/mL of aflatoxin B_2, 1000 ng/mL of aflatoxin G_1 and 300 ng/mL of aflatoxin G_2), dilute with 50 % methanol solution to constant volume 20 mL, serve as standard stock solution. Before use, dilute aflatoxin B_1 and aflatoxin G_1 with 50 % methanol solution to 0.1~50 ng/mL, dilute aflatoxin B_2 and aflatoxin G_2 with 50 % methanol solution to 0.05~15 ng/mL, serve as standard solution.

Sample solution: Take 50.0 g of grinded and mixed sample, weigh accurately, place it in a homogenizer, add 5.0 g of sodium chloride, and add 100.0 mL of 80 % methanol, homogenate at 15000 rpm for 2 minutes, filter with filter paper. Accurately take 10 mL of filtrate and mix with 40 mL of water, filter with glass

microfiber filter. Accurately take 10 mL of filtrate, pass through an immunoaffinity column at the rate of 1 drop per second, after all filtrate pass through the column, wash the column twice with 10 mL of water at the rate of 1 drop per second. After driving out the water from the column, add 1 mL of methanol, elute at the rate of 1 drop per second, collect the eluent, add water and mix to constant volume 2 mL, filter by syringe filters, and the filtrate serves as a sample solution.

Chromatographic apparatus: HPLC with Fluorescence detector (360 nm excitation wavelength and a 440 nm emission wavelength), photoreactor and 4.6 mm × 25 cm of chromatographic column (octadecylsilane chemically bonded silica; filling diameter is 5 μm), the rate of mobile phase is 1.0 mL per minute.

Assay: Take 50 μL of sample solution and standard solution, inject respectively in the chromatographic apparatus, record the chromatogram, compare and identify the retention time of the peaks in sample solution and standard solution, and calculate the content of aflatoxin in the sample (ppb):

The content of aflatoxin in the sample (ppb)＝

$$\frac{C \times V \times F}{M}$$

C: the concentration of aflatoxin (ng/mL).in the sample by the calibration curve
V: final volume of the sample solution (mL)
F: 50.
M: weight of the sample (g).
Total content of aflatoxin (ppb) ＝ the content of B_1(ppb) ＋ the content of B_2(ppb) ＋ the content of G_1 (ppb) ＋ the content of G_2 (ppb).

IV. General Requirements and Rules for Preparations

Please refer to the general notice of Chinese Pharmacopeia (7th Edition).

V. Identifications of Crude Drugs

(5001) Sampling

Use a sampling tool to collect the crude drug at least 2 batches on the different parts of the opposite sides from original packing, this method is only suitable to drug that size less than 1cm, crushed or powdered. If the total quantity of crude drugs is less than 100 kg, the minimum weight of sample is 250.0 g. If the total quantity is more than 100 kg, in accordance with the table as follows, choose several packages, sampling from several packages as above described, mix the sample well on the paper, pave the sample and divide into four equal portions, take the samples in opposite positions, mix and flatten these two parts, divide it into four equal portions, and take the two parts samples in opposite positions, repeat the procedure until the weight of final two parts are at least 250.0 g.

For crude drugs more than 1 cm in size, directly use hand for sampling. If the total quantity is less than 100 kg, randomly collect different parts from the original package with quantity not less than 500.0 g. If the total quantity is more than 100 kg, choose several packages in accordance with the table as follows, take several packages as described above, quarter the samples repeatedly until the weight of final two parts are at least 500.0 g.

Total packages	Sampling packages
1~10	1~3
10~25	3~4
25~50	4~6
50~75	6~8
75~100	8~10
100 above	10 above

If the total weight of crude drugs is less than 10 kg, sample in accordance with the portions of the package by the method above, the minimum weight of sample is 125.0 g.

(5002) Processing

Test specimens should be processed before testing, unless otherwise directed, process the test specimens as follows: Depending on the required quantity for determination, divide sample herbs into four small portions by the quartering, be aware of that the sample from package needs to represent the original sample in operating. Grind sample into powder and sieve by NO. 20 sieve. Try to grind the sample which is hard to grind into small fragments. Place on a paper after grinding, mix it well, pave into a thin layer, collect the required quantity by quartering, and then prepare for test determination.

(5003) Determination of Foreign Matter

Foreign matters in the crude drugs are two kinds as following:

1. The portions of animal or botanical crude drugs do not meet the monographs for medicine use.
2. Other animal or botanical foreign matters and the crude drugs secretion, differ from the crude drugs specified in the monographs.
   For determination, weigh 25~500 g of crude drugs accurately and pave in a thin layer. Remove the foreign matter by using a suitable forceps. Weigh the foreign matter and calculate the content in percentage. If the crude drugs are bulky or large particle, weigh 500.0 g of the test specimen for determination.

(5004) Determination of Ash

I. Total Ash: Ignite a crucible at 550℃ for 1 hour, cool in a desiccator and weigh accurately. Unless otherwise directed, put 2~4 g of the air-dried test specimen in the crucible and weigh accurately. Heat at a low temperature until it completely charred (do not combustion), then gradually increase the temperature below 550℃. Incinerate the residue for more than 4 hours until no carbon substance remains in the ash, cool and weigh the ash accurately. Calculate the percentage of total ash. If the carbon substance remains, dip the charred mass with hot water, collect the insoluble residue by filter paper without ash, and incinerate the residue and filter paper until no carbon substance remains in the ash. Then add the filtrate, evaporate it to dryness, and incinerate at the temperature not more than 550℃. Cool, weigh accurately, and calculate the percentage of total ash. If a carbon-free ash cannot be obtained in this way, cool the crucible, moisten the ash with 15 mL of ethanol and grind the ash with a glass rod. Carefully evaporate the ethanol to dryness and ignite at the temperature not more than 550℃ to constant mass, calculate the percentage of total ash.

II. Acid-Insoluble Ash: Place the ash obtained in the determination of total ash in a crucible, carefully add 25 mL of dilute hydrochloric acid, boil gently for 5 minutes, filter with tared Gooch crucible or filter paper without ash, and wash the residue with hot water. Transfer the filter paper with the residue together to the original crucible, dry and ignite to constant weight. Calculate the percentage of acid-insoluble ash.

(5005) Determination of Water Content

The process of test specimen: Take 10.0 g of test specimen, if the test specimen is not finely grinded, grinded it into about 3 mm of scrap. If the test specimen is seed or fruit which size is less than 3 mm, crush them. During the process, prevent the water losing from the specimen, thus avoid using a high speed milling machine. The picking sample should represent the population.

I. Determination of crude drug water contained no volatile components:

Dried the weighing bottle at 105℃ for 1 hour, weigh accurately. Take 10.0 g of test specimen prepared as above, place it in a weighing bottle, and weigh accurately. Dry it at 105℃ for 5 hours, place it in a desiccator and cool, then weigh. Continue drying, weigh every hour until the difference between two weighing is less than 0.25 %, calculate the percentage of water by the losing weights of test specimen.

II. Determination of crude drug water contained ether-soluble volatile components:

Determine the percentage of the volatile ether extractive in test specimen by determination of extractive method IV (General rule 5006). The percentage of loss on drying minuses the percentage of volatile ether extractives equal to the percentage of the water in the test specimen.
Determination of water in crude drugs is also determined by toluene distillation method (General rule 3010).

(5006) Determination of Extractives

I. Ethanol extractives: Place the prepared test specimen in a glass-stopper weighing bottle, weigh 2 g accurately, transfer to a tared Soxhlet extractor, extract for 5 hours by ethanol in continuous extractor, and place 0.2 g of sodium hydroxide in a receiving flask. Dry the residue at 100℃ for 30 minutes in an annular tuber and weigh. Determine the content of water by toluene distillation method (General rule 3010), and calculate the content of water in this test specimen. The weight of test specimen minus the content of water and weight of the residue equal to the weight of ethanol extractives.

II. Dilute ethanol extractives: Weigh accurately 2 g of prepared tests specimen, place in a glass-stopper conical flask, add about 70 mL of dilute ethanol, immerse 8 hours, shake every 30 minutes in the period, and then stand for 16 hours, filter. Rinse the conical flask and the residue with dilute ethanol, washed liquid pass through the filter and add in the filtrate until the total volume reach 100 mL. Dry an evaporating dish at 105℃ for 1 hour, place and cool in a desiccator, then weigh accurately. Place 50 mL of filtrate in an evaporating dish, evaporate to dryness in a boiler, and dry at 105℃ to constant weight. Calculate the percentage of the dilute ethanol extractives in the test specimen, and calculate the percentage of dilute ethanol extractives on the dried basis with the value of loss on drying.

III. Petroleum benzine extractives: Weigh accurately 2 g of prepared test specimen, use Soxhlet extractor to extract for 20 hours by petroleum benzine until the soluble substance are totally extracted. Transfer the extracted liquid to a tared porcelain evaporating dish, volatilize naturally, then place in a sulfuric acid desiccator and dry for 18 hours, weigh and calculate the percentage of the petroleum benzine extractives in the test specimen.

IV. Volatile ether extractives: Place the prepared test specimen in a sulfuric acid desiccator and dry for 12~48 hours, weigh accurately 2.0 g of test specimen, use Soxhlet extractor to extract for 20 hours by ether. After extraction, transfer the extracted liquid to a tared porcelain evaporating dish, volatilize naturally, place the residue in a sulfuric acid desiccator and dry for 18

hours and weigh, gradually heat to 105℃ until the weight remains constant. According to the difference between two weights, calculate the percentage of the volatile ether extractives in the test specimen.

V. Non-volatile ether extractives: Dry the ether extractives which are obtained above at 105℃ until the weight remain constant, then weigh. The obtained weight is the weight of the non-volatile ether extractives in the test specimen, calculate the percentage.

VI. Water extractives: As described on method II dilute ethanol extractives, use water substitute the dilute ethanol in the experiment.

VII. Hot extraction method: Weigh accurately 2~4 g of test specimen, place in a 100~250-mL conical flask, accurately add 50~100 mL of ethanol, stopper and weigh, stand for 1 hour, connect a reflux condenser then boil for 1 hour. Cool, take the conical flask, stopper and weigh, add ethanol to its original weight, shake well and filter through a dry filter. Place 25 mL of the filtrate in an evaporating dish dried previously to constant weight. Evaporate the filtrate to dryness on a boiler. Dry at 105 ℃ for 3 hours and cool for 30 minutes in a desiccator. Weigh rapidly and accurately, unless otherwise directed in the monographs, calculate the percentage of water soluble extractives on the dry basis (%).

(5007) Determination of Volatile Oil

Apparatus: A is a 1000 mL round-bottom flask made of hard glass, B is a cork wrapped with aluminum foil, C is an oil collector which has two types: light oil and heavy oil, the scale is 0.1 mL, devices shown in Figure. D is a connect tube of oil collector, wrapped with asbestos yarn to keep the temperature, avoid the oil condense, E is a condenser, F is an oil boiler, G is an iron framework. Check apparatus before determination, each parts should be connected tightly, avoid the volatile oil escape.

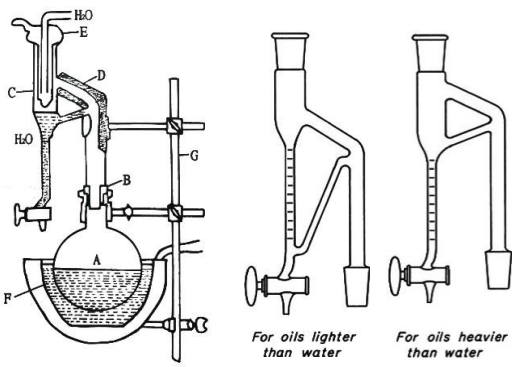

Volatile Oil Apparatus

Assay: Weigh accurately a quantity of the test specimen which can evaporate at least 2 mL of volatile oil, place in a flask A, add 3~6 times quantity of water, mix well, connect the flask with the connecting tube. Heat to boiling and keep boiling slightly for 4~8 hours, or until the volatile oil in the test specimen totally distillated.
In the case of light oil, discard liquid on the lower end of the oil collector to allow the oil layer converges at the scale position, adjust the temperature to 25℃, measure the volume.

In the case of heavy oil, after distillation, open the stopcock of oil collector, transfer the oil to a small cylinder, and transfer the water which mixes with oil drops to a small liquid separator, rinse the oil collector with 10 mL of ether, add the ether liquid to the liquid separator, shake and stand for separation, discard the water layer, evaporate the ether solution under slight heat until odor of ether disappear, the remain oil liquid incorporates in the cylinder, adjust the temperature to 25 ℃ and measure the volume. For measuring the weight of volatile oil, add a small quantity of anhydrous sodium sulfate in obtained oil, shake slowly, and stand until the liquid becomes clear. Pour out the clear oil, measure the specific gravity at 25℃, calculate the mass-volume percentage of volatile oil.

(5008) Determination of Loss on Drying

Take 5.0 g of test specimen, place it in a weighing bottle, and weigh accurately. Dry the weighing bottle with test specimen at 105℃ for 5 hours, place it in a silica gel desiccator and cool, and then weigh again. Continue to dry, weigh every hour until the difference between two weights is less than 0.25 %, calculated the percentage of loss on drying by the losing weights. For ensuring desiccator is fully effective, frequently change the desiccant is necessary.

(5009) Determination of Swelling Capacity

Swelling capacity is an index to indicate the swelling property of drugs. It is defined as the volume (mL) of 1.0 g of dry drug swell in water or in other specified solvent at a definite time and temperature. It is mainly used for the natural drugs contained mucilage, gelatin and hemicellulose.

Assay: Weigh accurately a quantity of drug by the monograph, follow the monograph to crush if necessary, weigh, put in a assay tube (160 mm in total length. 16 mm in inner diameter, 125 mm long in the scale portion, scale is 0.2 mL), add 25 mL of water or specified solvent at 20~25℃, stopper tightly, shake and stand. Unless otherwise directed, shake every 10 minutes in the first hour, then stand for 4 hours, read the volume of the test specimen after swelling, and read again after standing for 1 hour, until the volume difference is less than 0.1 mL between two readings. Measure three test specimens for each drug, and calculate the average value (accurate to the first decimal place).

$$S = \frac{V}{W}$$

S: swelling capacity.
V: swelling volume of the test specimen (mL).
W: weight of the test specimen calculated in dry basis (g).

(5010) Microscopic Identification

I. Theory of microscopic sectioning:

The structure of plants is more complicated, in order to achieve the research and identify purposes by observation under a microscope or magnifying glass, structure slicing is an important and necessary step for research. Observe correctly has a great relation with slicing technique, for the research on structure of botanicals tissue, the most ideal specimen is the plants which is in the natural conditions. Most of the plant cells or its organelles are translucent or transparent under the microscope, therefore staining is an important method. Base on the reason above, considering how to preserve the original plant cell and structure in the process of making the tissue sections is important.

There are two types of botanical sections, temporary and permanent section. Temporary section is usually carried by free-hand section. Not preserve the sections after observing. The permanent preservation method for section is dehydrated the plant tissue and replaced with balsam, resin or other substance. After dehydrating, stain the tissue with one or several types of dyes in order to facilitate the observation and preserved the section for future observation.

II. Fixation:

Fixation of the botanical tissue is a series of process. First step is fixing the crude drug. The term "fixation" is to put the live botanical tissue in the fixative, and let the plant tissue fixed, so the liquid used in the fixation also have the function of preservation and anticorrosion. Fixative has to be rapid penetrative, in order to keep the tissue similar to the natural plant tissue. In order to penetrate rapidly, the sample size is an important factor. Before placing tissue in fixative, the specimen should be cut into the suitable size, less than $0.6\times0.6\times0.6$ cm^3. Gas in the plant material may impede the penetration of the liquid. There are two common methods to remove the gas, boiling method and degas method. Boiling method usually applies on hard and tough material, boil for thirty minutes to one hour. Degas method usually applies on finely divided material. Fixatives cause condensation and hardening on the inner parts of the tissue and facilitate slicing.

Commonly used fixatives:

1. Ethanol: Commercially available ethanol is about 95 %. Absolute alcohol easily absorbs water vapor in the air and changes the concentration. Alcohol is weakly alkaline, the feature of ethanol is infiltrating the tissue rapidly. However, rapid infiltration has a disadvantage which may cause the material atrophy and excessive hardening, and it also can't preserve the fine components within the cytoplasm and cause the roughness of cytoplasm and nucleus. When only using alcohol, the concentration is usually 50%~70%. Alcohol usually use with other reagents. Due to its rapid penetration, it can harden the soft material and facilitate the slicing.
2. Formalin: Formalin is an aqueous solution contained 36%~40% of formaldehyde. Formalin causes less atrophic to the cell and can preserve the fine structure in the cytoplasm. However, it also causes tissue hardening and brittleness and makes cell wall broken off. To avoid these phenomena, the concentration of formalin should be below 5%.
3. Acetic acid: Glacial acetic acid contains about 100% acetic acid, is a common fixative for nuclear components such as chromosomes, it infiltrates rapidly and softens plant tissues. However, it can't preserve the structure of cytoplasm and may easily cause the cell walls and chromosomes swelling.
4. Chromic acid: Low concentration (about 1%) of aqueous chromic acid solution is commonly used in the fixation of lower-class plants (ex. algae). It can preserve the cytoplasm and nucleus components (except mitochondria) to a certain extent. It also causes less swelling and atrophy. The disadvantage of chromic acid is slow infiltration, chromic ion (heavy metal) which usually combines with the tissue is hard to remove, the chromic ion deposits in the structure and interferes with the dying, so the test specimen which contains heavy metal has to be rinsed with the water 8 to 12 hours.

Commonly used mixed fixatives:

1. F.A.A fixative:

Content	Volume
50%~70% alcohol	90 mL
Glacial acetic acid	5 mL
Formalin	5 mL

Glacial acetic acid causes tissue swelling and formalin makes it atrophic, mixture of two obtains better effect. The fixed time is at least 4 hours (depend on the infiltration characteristic of fixatives). Before dehydration, rinse the tissue with 50% ethanol for half an hour.

2. Craf III fixative:

Solution A contains 30 mL of 1% chromic acid and 20 mL of 10% glacial acetic acid.
Solution B contains 10 mL of formalin and 40 mL of water.

Mix solution A with solution B (1:1) before use. Because the formalin is a strong reducing agent and chromic acid is a strong oxidative agent, the solution turns to dark green or dark brown solution. The mixture does not contain alcohol, therefore the atrophy or hardening effect to plant tissue in Craf Ⅲ is less than that in FAA. It is the ideal fixative for the soft structure such as meristem and reproductive organ. The main disadvantage of the fixative is slow penetration (fixation takes about 12 hours). Due to the existence of chromium (heavy metal), it needs more time to rinse (rinsing 8 – 12 hours is required before dehydration).

III. Dehydration and staining:

The steps of dehydration and staining: use the reagents (ethanol, *t*-butanol, etc.) to replace the water in the tissue gradually, from low concentration to high concentration to achieve a completely waterless. Common organic reagents used in the dehydration are ethanol and *t*-butanol (*tert*-Butylalcohol). This type of organic reagents often leads to the alteration on tissue morphology. The concentrations of reagent used for dehydration depends on concentrations of fixatives and the natures of specimen. Relatively soft and tender materials may start with lower concentration of alcohol for dehydration (about 20%). Relatively hard materials may start with higher concentration of alcohol for dehydration (about 50%~70%). It should also fit or close to the concentration of fixatives. For example, using FAA as fixative, may start with 50% alcohol. If Craf III is used as fixative, we may start with 20%~30% of alcohol, from 20% → 30% → 50% → 70% → 85% → 95% → 100%. The interval between each step varies with material sizes.

Staining may be carried out during the process of dehydration. All dyes must be dissolved in a suitable solvent to achieve the purpose of coloring. When to stain depends on the solvent concentration, for example, the dyes which are soluble in 50% ethanol add into the test specimen can be dyed during the step of 50% ethanol dehydration process.

IV. Free-hand sectioning:

Free-hand sectioning is the most basic and easy method in sectioning techniques. It is used for preliminary observations for crude drug, or rapid identification. To make the section, hold the knife which has relatively stable blade with one hand, and hold materials with another hand, then process serial sectioning. Allow cut material floating on the beaker contained water, and then select the proper thickness section, put the section in a fixative. The fixative can be 50%~70% of alcohol. The alcohol is seldom used as the fixative alone, but it can be used in the free-hand sectioning. Alcohol does not cause obvious damage to the tissue and simplify the fixation process. Because during the free-hand sectioning, cytoplasm or intracellular compounds often prolapse from the incision, the remaining part are mostly cell wall, thus preservation of the cytoplasm is not a crucial point to the choice of the fixatives. After fixation with alcohol 4~12 hours, dehydration and staining can be carried out, the steps as follow:

1. 50% alcohol solution contained 0.5% safranin for 3 hours to overnight.
2. Rinse with 50% alcohol for 3 times.
3. 70% alcohol for 10 minutes.
4. 85% alcohol for 10 minutes.
5. 0.1% Fast-green in 95% alcohol solution for less than 5minutes (varies with different materials).
6. Rinse with95% alcohol for 3 times.
7. Dehydrated alcohol for 5 minutes.
8. Dehydrated alcohol for 5 minutes.
9. Dehydrated alcohol and xylene (1:1) for 10 minutes.
10. Xylene for 10 minutes.

Transfer it to glass slides, add one drop of balsam and cover with cover slips. Each step is carried out in a small petri dish. After drying the glass slides, it can be preserved for a long period and observe anytime.

V. Paraffin method:

1. Fixation:

In this method, the material is buried in the wax block, slice the materials with wax block together and then remove the wax. This method involves more steps and is more complicated than free-hand sectioning staining as described above. However, this method is commonly applied due to the better result at slicing. Before dipping into wax, this material requires the steps of fixation, rinsing and dehydration. These steps can be operated more conveniently in vials. Before the dehydration operation, remove the bubbles in the tissue by a suction device (for soft tissue). Sometimes the materials may sink to the bottom of solution, there is still gas left in the cell or in the cell intercellular spaces. The bubbles remain in the tissue may also be removed during the dehydration, but some of bubbles may still remain. Remaining bubbles form voids in the wax block and lead damage in the surrounding tissues during slicing. For meristematic tissue, bubbles can be removed more easily.

2. Dehydration:

Many reagents can be used for dehydration. The most common reagents are mixture of t-Butanol (tert-Butyl alcohol) and alcohol (TBA-series). Transfer the specimen to the solution as follows. The penetration of wax may start from the sixth step.

*TBA-Series			
	t-butanol	95% ethanol	H_2O
First step	10	40	50
Second step	20	50	30
Third step	35	50	15

*TBA-Series			
Fourth step	55	45	0
Fifth step	75	25	0
Sixth step	100	0	0

The time to every step of the dehydration varies with the size of tissue, from one to several hours. To medium hard material 0.5 × 0.3 × 0.3 cm^3 in size, each step takes about two hours. For the sixth step, it may preferably take eight to twelve hours. The melting point of t-butanol is 25℃, therefore it should be operated near the thermostat during winter.

3. Infiltration of paraffin:

After dehydration, *t*-butanol is gradually replaced with pure wax. This step is called infiltration of paraffin. The infiltration of paraffin is operated in a 60~65 ℃ thermostat. There is more than one way for infiltration of paraffin. Gradually add the small solid wax blocks in a fixed bottle three to five times. Each time add the wax blocks should not exceed one third of liquid in the bottle. Incomplete dehydration may cause incomplete infiltration of paraffin. Direct contact the material with wax blocks may cause rapid infiltration of paraffin which causes atrophy to the tissue. Use the method described above to avoid rapid infiltration of paraffin. In order to avoid direct contact the material with wax blocks, slowly melt the wax on a filter paper and the wax runs down through the filter paper to the bottom. The larger wax block has the slower melting speed.

Notice that the temperature in the thermostat should be embedding as lower as possible (but higher than the melting point of the wax). The infiltration of paraffin should be at an appropriate time duration and speed. Fast infiltration of paraffin will cause incompletion in infiltration of paraffin. The time cannot be too long either, especially fort the soft and tender tissue which are quite vulnerable in hot wax may be damaged in long time infiltration of paraffin. It is suitable for medium hard material take about twelve to twenty-four hours.

The last adding of wax blocks, open the fixed bottle after 2 hours, *t*-butanol in the bottle should be completely evaporated in 8 to 12 hours, leaving only the pure wax in liquid state.

4. Embedding:

Pour the material and liquid wax into a model, place in cold water for rapid cooling and the solidification of wax block. The most economical model is homemade carton, but using ceramic or stainless metal materials are preferable. During embedding, notice the arrangement, direction of the materials, distance between materials, and labels in the wax block. It is difficult to identify materials buried in the wax. If the material is too small or transparent, a small amount of Safranin powder can be added in the sixth step of dehydration. The pink dye on the material will not fade during slicing.

Choices of wax: The quality of the wax and correspondence with materials show a great effect on the section.

(1) Composition: The wax used for biological tissue section is often the mixture of paraffin wax, beeswax, gum and rubber. Wax prepared for slicing are sold by major biological material supplier such as Ex Histowax® (R. Jung Gmb H), Tissuemat and Bioloid.

(2) Melting point: Use high melting point wax for hard materials, and low melting point wax for delicate materials. If the room temperature is high during slicing, use a high melting point wax. The melting point of common wax is about 55℃.

(3) Texture: Wax is a crystalline material, the smaller crystalline particles show less impact on the tissue, wax which is used for several slicing can still be reused.

5. Sectioning:

Before slicing with a microtome, remove the excess wax block and fix it on a small piece of wood or special support material for easy binding on the microtome. There are two types of microtome involved in the embedding material slicing, rotary microtome and sliding microtome. Hard materials require special treatments and are more appropriate to use sliding microtome. When using a rotary microtome, the rotating speed should be kept at constant, 1~1.5 turns per second is more appropriate. The advantage of the sample is that pieces of wax can be connected into a continuous band of wax. The thickness of each slide is fixed. The thickness of the section depends on the purpose of the research, the slice for general cell tissue is about 10~15 μm. The thickness of each section can be adjusted on the microtome. However, errors may occur from microtome. The thinner the section is, the larger the errors occur. The length of the wax may also generate errors because of compression phenomenon.

6. Gluing sectioning:

First, glue the section with adhesive, stain the section and the slides together, not only obtain a continuous section, but also accompany with easy operation and high efficiency in this procedure. The more ideal homemade adhesive is Mayer's Adhesive, the composition are as follows: albumin, glycerol and a small amount of thymol and phenol as preservatives. According to the preparation of Mayer, the ratio of filtered albumin (stir well) and glycerol is 1:1. Glycerol is used for preventing dryness. If the humidity in environment is high, the ratio may swift to 2:1.

Before gluing wax band on the slide, the slide must be coated with a little bit adhesive, excessive coating leads protein dyed during staining process. Too little coating leads hard or thick material shedding during dehydration dye process. Drop an appropriate amount of 3%~4% of formalin on the adhesive agent coated slide before placing the cut wax band. Wax band is cut into the appropriate length, place it on the slide by using a small scalpel dipped with formalin, stick to the bottom

of the wax band and carefully transfer to the slide, arrange in neat row. Formalin between the wax band and the slide can be replaced by water or other liquid, the main function of the liquid is extending the compressed section and the compressed wax band, dilute formalin is the best liquid which is small surface tension and anti-corrosion. Transfer the slides filled with wax band and formalin solution to heating board at about 45℃, wax band began to stretch after heating, use the needle to line the wax band and pull the wax band gently, allow it to stretch evenly. Remove dilute formalin solution, leave it under 40~45℃ for one to several days (depends on the amount of adhesive).

7. Staining and dehydration:

All the procedures of staining, dehydration and cover with coverslip are the same as described above in free-hand sectioning. However, in this method, wax band must be dissolved in xylene before transferring the wax band in the high concentration alcohol for staining. As described above, all those steps are carried out in the staining bottle. For example, a simplified procedure for Safranin-fast Green staining is given below:

Dissolve wax band:

Fill the staining bottles with the following reagents. Move slides with wax band for each reagent:

(1) Xylene for 10 minutes.
(2) Xylene: absolute alcohol for 3 minutes.
(3) Absolute alcohol for 3 minutes.
(4) 95% alcohol for 3 minutes.
(5) 85% alcohol for 3 minutes.
(6) 70% alcohol for 3 minutes.
(7) 50% alcohol for 3 minutes.
(8) 1% safranin solution in 50% alcohol for 3-24 hours and wash excess dye with distilled water.
(9) 50% alcohol for 3 minutes.
(10) 70% alcohol for 3 minutes.
(11) 85% alcohol for 3 minutes.
(12) 85% alcohol for 3 minutes.
(13) 95% alcohol for 3 minutes.
(14) 0.5% fast green solution in 95% alcohol (may vary with materials used), rinse excess fast green off with 95% alcohol twice.
(15) Absolute alcohol twice, 3 minutes each time.
(16) Absolute alcohol: xylene (1:1) for 3 minutes.
(17) Xylene for 5 minutes.

Drop balsam and cover with coverslip.

VI. Vitrification:

Study the trend of vascular bundle in the botanicals, especially the distribution of the veins, the vitrification is the most ideal method. Regardless of fresh or herbal specimens, good sections can be produced by this method. The purpose of this method is made the most of the inner leaf tissue transparent and only dyed at veins, the veins or tissue with thick-walled cells is more obvious than other parts which are transparent. The steps are as follows:

1. Put the materials in 95% hot alcohol to dissolve chlorophyll. For dried sample, boil it with clean water and allow the material to sink to bottom of the bottle.
2. Transfer the material to a container with 3%~5% sodium hydroxide (relatively delicate material use lower concentration of NaOH).
3. Place it in incubator at 40℃ (1 to several days). Replace NaOH every day until the materials change to transparent and yellow, rinse with clean water for several times (these materials are easily broken).
   *If the material still remains opaque, put the materials in the clear reagent as below: 250.0 g chloral hydrate/100 mL of distilled water. Place in the incubator as the indicator above.
4. The material rinsed with clean water can store in 50% alcohol or process dehydration.
5. Dehydration and staining: Switch from low concentrations to high concentrations of alcohol and stain the material at an appropriate concentration as follows (carried out in a small culture):
   (1) 50% alcohol for 30 seconds to 1 minute.
   (2) 1% Safranin in 50% alcohol solution for several minutes.
   (3) 70% alcohol for 10 minutes.
   (4) 85% alcohol for 10 minutes.
   (5) 95% alcohol for 10 minutes.
   (6) Absolute alcohol for 10 minutes.
   (7) Absolute alcohol: xylene (1:1) for 10 minutes.
   (8) Xylene for 10 minutes
6. Sealing: Press the coverslip to flatten the material.

This method can be applied on fresh material, fixed material or dry sample specimen. The quality of sections varies from different type of materials. Fresh material usually gives the best result and the fixed sample specimen gives the worst result. When fresh material contains excessive wax, dry before operating as method described above, has better result on the purpose of vitrification.

VII. Maceration:

Plant tissue composed of multiple cells. In order to study and understand the botanical tissue cells in various forms, cell size, shape, the variety patterns on cell walls and the structure of pits, need to cell separation is needed before observation. Cell separation is done by dissolving middle lamella connected each cell with macerating fluid. There are many kinds of macerating fluid, each one with different capabilities. Agents can be applied according to the research purposes and the botanical tissue characteristics.

Time and materials can be easily controlled in this method for dissociation of wood and secondary tissue. This is an excellent dissociation method as it has a characteristic of minimum material wastage, due to the complete dissociation requires additional pressure after dissociation. The permanent microscopic sections can

be produced by dehydrating, staining and sealing after dissociation.

1. Cutting wood into the thickness size equals to half of a match stick, length is one centimeter, take ten pieces of wood and placed in a fixed bottle contained a mixture of the follows: Prepare the mixture by the ratio (1:4:5).

Content	Volume
Hydrogen peroxide solution (30% H_2O_2)	one part of volume
Distilled water	four parts of volumes
Glacial acetic acid	five parts of volumes

2. Tighten the fixed bottle, stand for 3~5 days (places in an incubator at 56℃, gives a better dissociation result), check constantly until the materials dissociate completely. For complete dissociation, the dissociating agent presents as transparent and the material is translucent or slightly white.
3. Rinse with water three times, each interval is about two hours. If the materials are hard to settlement, use low-speed centrifuge, then remove the upper layer of water with a straw.
4. Separate dissociated materials by a needle, pave evenly on a clean slide.
5. A drop of 10% safranin (dissolve in 50% alcohol) Add a drop of 10% safranin (dissolve in 50% alcohol) and stain for 5~10 minutes, the material must be covered in safranin. Place a petri dish on the slide, avoid the dye evaporates to dryness.
6. Remove the dye, drop 95% alcohol, rinse the dye and dehydrate simultaneously, refresh 95% alcohol.
7. As described above, rinse with absolute alcohol and dehydrate four times.
8. As described above, rinse with xylene twice.
9. Drop balsam and seal the section.

VI. Determinations of Biological Products

Please refer to the general notice of Chinese Pharmacopeia (7th Edition).

VII. Special Determinations

(7005) Microbial Limit Test

Microbial limit test provides tests for total amount of aerobic microorganism and specified microbial species in variety kinds of crude drugs, avoid accidental microbial contamination on the sample during the test. Unless otherwise directed. The word “culture” is meant in the limit test place in air with a constant temperature 30~35℃ for 24~48 hours; “proliferation” is meant the survival and reproduction of bacteria.

Preliminary test: The accuracy of the test result depends on that the test specimen has no inhibition toward specified microbial species, thus carry out preliminary test is necessary. Culture specified microbial *Staphylococcus aureus*, *Escherichia coli*, *Pseudomonas aeruginosa*, and *Salmonella* species for 24 hours. Individually add 1 mL of more than 10^{-3} bacterial liquid culture into test specimen which contain one time dilution of pH 7.2 phosphate buffer, soybean-casein digest agar medium or fluid lactose medium, then follow the test operation. The results of tests should be obtained proliferation.

If the test result shoes that the bacteria inoculated in the medium does not grow, then the part of result is invalid, adjust with one of the following method: (1) increase the volume of diluent, the quantity of test material is remained in the same (2) the incorporation with a sufficient quantity of suitable inactivating agent(s) in the diluents, or by (3) an appropriate combination and modification of method (1) and (2), decrease the antibacterial effect. For example, add 0.5 % soybean lecithin or 4.0 % oleic polyol polysorbate 20 in the medium to neutralize the inhibitory substances which present in the sample. On the other hand, repeating the test as described in the preceding paragraph with Fluid Casein Digest-Soy Lecithin Polysorbate 20 Medium to demonstrate neutralization of preservatives or other antimicrobial agents in the test material. If inhibitory substances are contained in the product which is soluble, applying the protocol with the Membrane Filtration Method mentioned in the Procedure is viable. If the methods described above are not possible to solve the problem. It can assume that the failure to isolate the inoculated organism is attributable to the bactericidal or bacteriostatic activity in the sample, and such magnitude treatments are not able to remove the activity. The information indicates that the medium is not likely to allow proliferation or contamination by the given species microorganism. Monitoring should be continued in order to determine the inhibitory range and bactericidal activity of the medium.

Buffer solution and Medium: Culture media may be prepared as follows; the dehydrated culture media which have same ingredients as the media below and yield media similar to those obtained from the formulas below, follow the direction from the manufacturer or distributor to make the culture.

In preparing media by the formulas, dissolve the soluble solids in the water, using heat is viable to help dissolve, and mediate the pH by adding sufficient of hydrochloric acid or sodium hydroxide solutions in the medium before use. Determine the pH at 25 ± 2℃. When the formula is indicated to use agar, the moisture content of it is not more than 15%. Use purified water during the procedure.

In preparing media by the formulas set forth herein, dissolve the soluble solids in the water, using heat if necessary to effect complete solution, and add solutions

of hydrochloric acid or sodium hydroxide in quantities sufficient to yield the desired pH in the medium when it is ready for use. Determine the pH at 25 ± 2℃. Where agar is called for in a formula, use agar that has a moisture content of not more than 15%. Where water is called for in a formula, use Purified Water.

pH 7.2 Phosphate Buffer: Stock Solution: Dissolve 34 g of monobasic potassium phosphate (KH_2PO_4) in 500 mL of water. Adjust the pH to 7.2 ± 0.1 by the addition of sodium hydroxide TS (about 175 mL), and add water to 1000 mL, mix, store in the refrigerator (2-8℃).

For use, dilute the stock solution with water in the ratio of 1 to 800, and sterilize.

Medium: Unless otherwise indicated elsewhere in this chapter, media are sterilized in autoclaves with a validated process. The exposure time within the autoclave at 121° will depend on the volume of media. (Typically time for autoclaving at 121℃ is 20 to 30 minutes.)

Culture medium I: Fluid Casein Digest-Soy Lecithin-Polysorbate 20 Medium

Content	Volume g/mL
Pancreatic digest of casein	20.0 g
Soybean lecithin	5.0 g
Polysorbate 20	40 mL
Water	960 mL

Dissolve pancreatic digest of casein and soybean lecithin in 960 mL of water, heating in a water bath at 48° to 50° for about 30 minutes to dissolve completely. Add 40 mL of polysorbate 20, mix , dispense as desired, and sterilize.

Culture medium II: Soybean-Casein Digest Agar Medium

Content	Volume g/mL
Pancreatic digest of casein	15.0 g
Papatic digest of soybean meal	5.0 g
Sodium chloride	5.0 g
Agar	15.0 g
Water	1000 mL

pH after sterilization: 7.3 ± 0.2.

Culture medium III: Fluid Soybean-Casein Digest Medium

Content	Volume g/mL
Pancreatic digest of casein	17.0 g
Papatic digest of soybean meal	3.0 g
Sodium chloride	5.0 g
Dibasic potassium phosphate	2.5 g
Glucose monohydrate	2.5 g
Water	1000 mL

pH after sterilization: 7.3 ± 0.2.

Culture medium IV: Mannitol-Salt-Agar Medium

Content	Volume g/mL
Pancreatic digest of casein	5.0 g
Peptic digest of animal tissue	5.0 g
Beef extract	1.0 g
D-mannitol	10.0 g
Sodium chloride	75.0 g
Agar	15.0 g
Phenol red	25 mg
Water	1000 mL

Mix, then heat with frequent agitation, and boil for 1 minute.

pH after sterilization: 7.4 ± 0.2

Culture medium V: Baird-Parker Agar Medium

Content	Volume g/mL
Pancreatic digest of casein	10.0 g
Beef extract	5.0 g
Yeast extract	1.0 g
Lithium chloride	5.0 g
Glycine	12.0 g
Sodium pyruvate	10.0 g
Agar	20.0 g
Water	950 mL

Mix, then heat with frequent agitation, and boil for 1 minute. Sterilize, cool between 45 and 50℃, and add 10 mL of sterile potassium tellurite solution (1 in 100) and 50 mL of egg yolk emulsion prepared as follows. Mix gently, and pour into petri dishes.

Preparation of egg yolk emulsion: Disinfect the surface of whole-shell eggs, aseptically crack the eggs, transfer intact yolks to a sterile graduated cylinder, add sterile saline TS with a 3 to 7 ratio of egg yolk to saline, add in a sterile blender cup, and mix at high speed for 5 seconds.

pH after sterilization: 6.8 ± 0.2.

Culture medium VI: Vogel-Johnson Agar Medium

Content	Volume g/mL
Pancreatic digest of casein	10.0 g
Yeast extract	5.0 g
D-mannitol	10.0 g
Dibasic potassium phosphate	5.0 g
Lithium chloride	5.0 g
Glycine	10.0 g
Agar	16.0 g
Phenol red	25.0 mg
Water	1000 mL

Mix, and boil for 1 minute. Sterilize, cool between 45 and 50℃, and add 20 mL sterile potassium tellurite solution (1 in 100) in an aseptic operation, and mix.

pH after sterilization: 7.2 ± 0.2.

Culture medium VII: Cetrimide Agar Medium

Content	Volume g/mL
Pancreatic digest of gelatin	20.0 g
Magnesium chloride	1.4 g
Potassium sulfate	10.0 g
Agar	13.6 g
Cetyl trimethyl ammonium bromide	0.3 g
Glycerin	10.0 mL
Water	1000 mL

Dissolve the solid in water, then add glycerin. Heat with frequent agitation, and boil 1 minute to dissolve.

pH after sterilization: 7.2 ± 0.2.

Culture medium VIII: Pseudomonas Agar Medium for Detection of Fluorescin

Content	Volume g/mL
Pancreatic digest of casein	10.0 g
Peptic digest of animal tissue	10.0 g
Anhydrous dibasic potassium phosphate	1.5 g
Magnesium sulfate ($MgSO_4 \cdot 7H_2O$)	1.5 g
Agar	15.0 g
Glycerin	10.0 mL
Water	1000 mL

Dissolve the solid in water, then add glycerin. Heat with frequent agitation, and boil 1 minute to dissolve.

pH after sterilization: 7.2 ± 0.2.

Culture medium IX: Pseudomonas Agar Medium for Detection of Pyocyanin

Content	Volume g/mL
Pancreatic digest of gelatin	20.0 g
Anhydrous magnesium chloride	1.4 g
Anhydrous potassium sulfate	10.0 g
Agar	15.0 g
Glycerin	10.0 mL
Water	1000 mL

Dissolve the solid in water, add glycerin. Heat with frequent agitation, and boil 1 minute to dissolve.

pH after sterilization: 7.2 ± 0.2.

Culture medium X: Fluid Lactose Medium

Content	Volume g/mL
Beef extract	3.0 g
Pancreatic digest of gelatin	5.0 g
Lactose	5.0 g
Water	5.0 g

After sterilization, cool immediately.

pH after sterilization: 6.9 ± 0.2.

Culture medium XI: Fluid Selenite-Cystine Medium

Content	Volume g/mL
Pancreatic digest of casein	5.0 g
Lactose	4.0 g
Sodium phosphate	10.0 g
Sodium acid selenite	4.0 g
L-cystine	10 mg
Water	1000 mL

Final pH value: 7.0 ± 0.2

Mix, and heat to effect solution. Then heat in flowing stream for 15 minutes.

Do not sterilize.

Culture medium XII: Fluid Tetrathionate Medium

Content	Volume g/mL
Pancreatic digest of casein	2.5 g
Peptic digest of animal tissue	2.5 g

Content	Volume g/mL
Bile salts	1.0 g
Calcium carbonate	10.0 g
Sodium thiosulfate	30.0 g
Water	1000 mL

Mix and dissolve the sample in the water, heat the solution boiled. Before using, add a solution which is prepared by dissolving 5 g of potassium iodide and 6 g of iodine in 20 mL of water, then add 10 mL of 0.1 % brilliant green solution, and mix. Do not heat after adding the brilliant green solution.

Culture medium XIII: Brilliant Green-Agar Medium

Content	Volume g/mL
Pancreatic Digest of Casein	5.0 g
Peptic Digest of an Animal Tissue	5.0 g
Yeast Extract	3.0 g
Lactose	10.0 g
Sodium Chloride	5.0 g
Sucrose	10.0 g
Phenol Red	80.0 mg
Agar	20.0 g
Brilliant green	12.5 mg
Water	1000 mL

Mix, and boil for 1 minute. Sterilize prior to use, melt, pour into petri dishes, and allow them to cool.

pH after sterilization: 6.9 ± 0.2.

Culture medium XIV: Xylose-Lysine-Desoxycholate-Agar Medium

Content	Volume g/mL
Xylose	3.5 g
L-lysine	5.0 g
Lactose	7.5 g
Sucrose	7.5 g
Sodium chloride	5.0 g
Yeast extract	3.0 g
Phenol red	80.0 mg
Agar	13.5 g
Sodium deoxycholate	2.5 g
Sodium thiosulfate	6.8 g
Ferric ammonium citrate	800 mg
Water	1000 mL

Final pH value: 7.4 ± 0.2

Heat, with swirling, just to the boiling point. Do not overheat or sterilize. Transfer immediately to a water bath maintained at about 50℃, and pour into petri dishes as soon as possible.

Culture medium XV: Bismuth Sulfite Agar Medium

Content	Volume g/mL
Enzymatic digest of casein	5.0 g
Enzymatic digest of animal tissue	5.0 g
Beef extract	5.0 g
Dextrose	5.0 g
Disodium phosphate	4.0 g
Iron (II) sulfate	300.0 mg
Bismuth sulfite indicator	8.0 g
Agar	20.0 g
Brilliant green	25.0 mg
Water	1000 mL

Final pH value: 7.6 ± 0.2

Heat, with swirling, just to the boiling point. Do not overheat or sterilize. Transfer immediately to a water bath maintained at about 50℃, and pour into petri dishes as soon before the medium cooled.

Culture medium XVI: Triple Sugar-Iron-Agar Medium

Content	Volume g/mL
Pancreatic digest of casein	10.0 g
Pancreatic digest of animal tissue	10.0 g
Lactose	10.0 g
Sucrose	10.0 g
Dextrose	1.0 g
Ferrous ammonium sulfate	200 mg
Sodium chloride	5.0 g
Sodium thiosulfate	200 mg
Agar	13.0 g
Phenol red	25 mg
Water	1000 mL

pH after sterilization: 7.3 ± 0.2.

Culture medium XVII: Mac Conkey Agar Medium

Content	Volume g/mL
Enzymatic digest of gelatin	17.0 g
Enzymatic digest of casein	1.5 g
Enzymatic digest of animal tissue	1.5 g
Lactose	10.0 g
Bile salts mixture	1.5 g
Sodium chloride	5.0 g
Agar	13.5 g
Neutral red	30.0 mg
Crystal violet	1.0 mg
Water	1000 mL

Mix, and boil for 1 minute to dissolve completely.

pH after sterilization: 7.1 ± 0.2.

Culture medium XVIII: Levine Eosine-Methylene Blue Agar Medium

Content	Volume g/mL
Enzymatic digest of gelatin	10.0 g
Dibasic potassium phosphate	2.0 g
Lactose	10.0 g
Eosin Y	400 mg
Agar	15.0 g
Methylene blue	65.0 mg
Water	1000 mL

Dissolve enzymatic digest of gelatin, dibasic potassium phosphate, and agar in water, with heating, cool. Just prior to use, liquefy the gelled agar solution by heating and add the remaining ingredient solutions, in the following amounts: for each 100 mL of the liquefied agar solution, add 5 mL of lactose solution (1 in 5), 2 mL of the eosin Y solution (1 in 5), and 2 mL of methylene blue solution (1 in 300). Mix. The finished Medium may not be clear

pH after sterilization: 7.1 ± 0.2.

Culture medium XIX: Sabouraud Dextrose Agar Medium

Content	Volume g/mL
Dextrose	40.0 g
Mixture of peptic digest of animal tissue and pancreatic digest of casein(1:1)	10.0 g
Agar	15.0 g
Water	1000 mL

Mix, and boil to dissolve completely.

pH after sterilization: 5.6 ± 0.2.

Culture medium XX: Potato Dextrose Agar Medium

Content	Volume g/mL
Dextrose	20.0 g
Agar	15.0 g
Water	1000 mL

Peel the potatoes, cut into small cubes, take 300 g of potatoes add in 500 mL of distilled water and boil, filter by cheesecloth. Add more distilled water to 1000 mL, then add agar and glucose, slightly heat to dissolve, adjust the pH value, sterilize it, after sterilization pH value is 5.6 ± 0.12. Just prior to use, liquefy the gelled agar solution by heating, cool and keep at 45℃, add 10 % sterile tartaric acid and adjust the pH value to 3.5 ± 0.1, pour into petri dishes. Do not heat the pH3.5 medium.

Sampling: Take 10.0 mL or 10.0 g of the test specimen as standard.

Assay: According to the physical properties of the test specimens, prepare a suitable solution or suspension for testing, but do not change the quantity and variety of the microorganisms which are originally present in test specimen after modulation.

1. Solid test specimens: The solid which cannot dissolve completely grinds to a fine powder, suspended in the specified solution. Then determine the following, total number of aerobic microorganisms. Test for *Staphylococcus aureus*, *Pseudomonas aeruginosa*, *Salmonella* species, and *Escherichia coli* by indicated method.
2. Liquid test specimens: Including a true solution or suspension which suspended in water or alcohol solution (containing less 30% ethanol) for liquid tests, dissolve completely in 90 mL of pH 7.2 phosphate buffer or solid test specimens in the specified culture medium. Then determine the following, total number of aerobic microorganisms and. Test for *Staphylococcus aureus*, *Pseudomonas aeruginosa*, *Salmonella species*, and *Escherichia coli* by indicated method.
3. Water-immiscible liquids, ointments, creams and waxes: For this kind of test specimens, add a small amount of sterilised emulsifying agent such as 0.1% polysorbates, if necessary, heat below 45 ℃, then stirring to make the suspension. Then determine the following, total number of aerobic microorganisms. Test for *Staphylococcus aureus*,

Pseudomonas aeruginosa, *Salmonella* species, and *Escherichia coli* by indicated method.

4. Sprays: Place the test container in a mixture of ethanol and dry ice and cool for about one hour, cut the container, wait for returning to room temperature,if necessary give a lukewarm, promote the spray propellant escaping; take a quantity of the test specimen for each test as follow the monographs. If can't take 10.0 mL or 10.0 g of the test specimen from the ten sprayers, cut the ten sprayers, transfer the content to the medium, when the spray propellant escapes; test the residue. If the result of the test is not suitable, then retest other 20 more bottles.

Retest: Take 10.0 g of the test specimen, test with the method described above, for further confirmation, retest 25.0 g of the test specimen as described, but the quantity of the test should be appropriate.

(7006) Total Aerobic Microbial, Yeasts and Molds Count

I. Total Aerobic Microbial Count

The specimens turn into a solution by dissolving or preparing into suspension. For specimens which are sufficiently soluble or translucent to permit use of the Plate Method, use that method; otherwise, use the Multiple tube method. With either methods, first dissolve or suspend 10.0 g of the specimen if it is a solid, or 10 mL, accurately measured, if the specimen is a liquid, in pH 7.2 Phosphate Buffer, Fluid Casein Digest-Soy Lecithin Polysorbate 20 Medium or Soybean-Casein Digest Medium to make 100 mL. For viscous specimens that cannot be pipetted at this initial 1:10 dilution, dilute the specimen until a suspension is obtained, i.e., 1:50 or 1:100, etc., that can be pipeted. Perform the test for absence of inhibitory (antimicrobial) properties as described under Preparatory Testing before the determination of Total Aerobic Microbial Count. Add the sample solution to the medium not more than 1 hour after pre paring the appropriate dilutions for inoculation.

1. Plate-Count method:

If necessary, dilute the fluid further, so the 1 mL of dilute solution will be expected to yield 30 to 300 colonies (effective range). Pipette 1.0 mL of each dilute test specimen, place into two sterile Petri dishes respectively. Promptly add 15 to 20 mL of dissolved Soybean-Casein Digest Agar Medium which is cooled to 45℃ to each dish, Cover the Petri dishes, mix the sample with agar by gently tilting or rotating the dishes, and allow the contents to solidify at room temperature. Invert the Petri dishes and incubate at 30~35℃ for 48 to 72 hours, calculate the number of colonies. The total amount of microorganisms per g or per mL, calculate by the average number of two plates multiply the final dilution factor. If no colonies produce from the initial 1:10 dilution of the specimen, mean the test specimen is less than 10 microorganisms per g or per mL.

2. Multiple-tube method:

Take 14 test tubes in the same size, and add 9.0 mL of sterile Fluid Soybean-Casein Digest Medium in each tube. Arrange 12 of the tubes in four sets, each set with three tubes. Put aside one set of three tubes to serve as the control, another two tubes are A and B. Take three tubes from the set ("0.1") and tube A, pipette 1 mL of the solution or suspension of the specimen, and mix. Take three tubes from the second set ("0.01") and tube (B), pipette 1 mL of solution from tube A into each tube. Take three tube from the third set ("0.001"), pipette 1 mL of solution from tube B. Discard the unused contents of tubes A and B. Close well, and incubate all of the tubes at 30~35℃ for 24 to 48 hours. After incubation complete, examine the tubes, the three control tubes should remain clear (no bacterial growth), and the observations of the tubes contained the specimen can be interpreted by the table below, indicate the most probable number of microorganisms per g or per mL.

Observed Combinations of Numbers of Tubes Showing Growth in Each Set			Most Probable Number of Microorganisms per g or per mL
〝100〞	〝10〞	〝1〞	
3	3	3	＞1100
3	3	2	1100
3	3	1	500
3	3	0	200
3	2	3	90
3	2	2	210
3	2	1	150
3	2	0	90
3	1	3	160
3	1	2	120
3	1	1	70
3	1	0	40
3	0	3	95
3	0	2	60
3	0	1	40
3	0	0	23

II. Total Combined Yeasts And Molds Count:

Proceed as directed with Plate Method in Total Aerobic Microbial Count, except to use the same amount of Sabouraud Dextrose–Agar Medium or Potato Dextrose Agar Medium instead of Soybean–Casein Digest–Agar Medium, incubate the plates for 5 to 7 days at 20° to 25°.

(7007) Contamination Determination of Microorganism

(7007.1) *Escherichia coli* (*E. coli*)

Take a quantity of the specimen add fluid lactose medium to 100 mL, mix well, incubate at 30℃~35℃ for 24 to 48 hours, observe the growth of microorganisms, if the colonies are produced, use an inoculating loop to dip the medium, draw on the surface of MacConkey Agar Medium. Cover, invert the plates, and incubate at 30~35℃ for 24 to 48 hours, observe the appearance of its colonies. Identify with reference Table below, if no colonies having the characteristics described in the Table, the test specimen meets the requirements for the absence of *Escherichia coli*.

If find the suspicious colony, transfer suspected colonies individually by an inoculating loop, move on the surface of a plate with Levin Eosine-Methylene Blue Agar Medium. Cover the plates, invert, and incubate at 30~35℃ for 24 to 48 hours, observe the appearance of colonies. If none of the colonies exhibit a characteristic metallic sheen under reflected light, and none exhibit a blue-black appearance under transmitted light, the test specimen meets the requirement for the absence of *Escherichia coli*.

If suspicious colony found, suspected colonies transferred individually, using an inoculating loop, onto the surface of a plate with Levin Eosine-Methylene Blue Agar Medium. Cover the plates, invert, and incubate at 30~35℃ for 24 to 48 hours, observe the appearance of colonies. If none of the colonies exhibit a characteristic metallic sheen under reflected light, and if none exhibit a blue-black appearance under transmitted light, the test specimen meets the requirement for the absence of *Escherichia coli*.

Special Medium	Colony characters	Gram stain
MacConkey Agar Medium	Brick red, around the precipitation ring of bile	Negative cocci
Levin Eosine-Methylene Blue Agar Medium	It has a special luster in reflected light, the color is blue-black in transmitted light	Negative cocci

(7007.2) Salmonella

Take a quantity of the test specimen add Fluid Lactose Medium and make up to 100 mL, mix well, incubate at 30~35℃ for 24 to 48 hours, observe the growth of microorganisms, if the colonies are produced, then shake slightly and mix well, respectively pipette 1.0 mL of solution into 10 mL of Fluid Selenite-Cystine Medium and 10 mL of Fluid Tetrathionate Medium, mix well, and incubate at 30~35℃ for 12 to 24 hours. Dip in the incubated media with an inoculating loop, streak one or more on the surfaces of Brilliant Green Agar Medium, Xylose-Lysine-Desoxycholate Agar Medium, and Bismuth sulfite Agar Medium. Cover, invert the plates, and incubate at 30° to 35° for 24 to 48 hours. Observe the appearance of the colonies, interpret the results with reference table below, if no colonies have the characteristics, the test specimen meets the requirements for the absence of *Salmonella* species

If colonies with characteristics described in Table below are present, the suspect colonies are transferred to a slant of Triple Sugar-Iron Agar Medium with an inoculating wire, first streaking the surface of the slant, and then stabbing the wire well beneath the surface. Incubate at 30° to 35° for 24 to 48 hours. If the tubes do not have red slants (non-alkline) and yellow butts (non-acidic, with or without concomitant blackening of the butts from hydrogen sulfide production), the test specimen meets the requirement for the absence of *Salmonella* species.

Special Medium	Colony characters	Gram stain
Brilliant Green Agar Medium	small, transparent, colorless or pink to white (often pink to red circle)	Negative cocci
Xylose-Lysine-Desoxycholate Agar Medium	Red, with or without black center	Negative cocci
Bismuth sulfite Agar Medium	black or green	Negative cocci
Triple Sugar–Iron–Agar Medium	Slant culture: Red	Negative cocci

(7007.3) *Pseudomonas aeruginosa*

Take a quantity of the test specimen add Fluid Casein Soybean Digest Medium and make up to 100 mL, mix well, incubate at 30~35℃ for 24 to 48 hours, observe the growth of microorganisms. if the colonies are produced, use an inoculating loop dip in the incubated media, streak on the surface of Cetrimide Agar Medium, Cover, invert the plates, and incubate at 30~35℃ for 24 to 48 hours, observe the result. Interpret the results with reference table below. If no colonies have the characteristics described on the table, the test specimen

meets the requirements for the absence of *Pseudomonas aeruginosa*. Confirm any suspect colonies as *Pseudomonas aeruginosa* by applying the oxidase test. Suspected colonies transferred individually with an inoculating loop, streak on the surface of Pseudomonas-Agar Medium for detection of Fluorescin and Pseudomonas-Agar Medium for detection of Pyocyanin. For multiple colonies, inoculate on each surface of medium which is divided into four equal parts, then inoculated respectively. Cover and invert the plates at 35 ± 2℃, incubated for at least three days, Observe the growth of colonies under UV light, match the growth appearance with the following table. If still suspect confirm suspect colonies as *Pseudomonas aeruginosa* by applying the oxidase test. Colonies were inoculated in filter paper advance treated by dihydrochloride *N*,*N*-dimethyl-*p*-phenylenediamine, observe the growth of the colonies. If the filter paper does not appear pink and then turn into violet, this refers to the test meets the requirements without *Pseudomonas aeruginosa*. If necessary, use other appropriate methods of culture and biochemical tests for further determination.

Special Medium	Colony characters	Fluorescent under UV light
Cetrimide Agar Medium	Green in general	Green
Pseudomonas-Agar Medium for detection of Fluorescin	Colorless to yellow in general	Yellow
Pseudomonas-Agar Medium for detection of Pyocyanin	Green in general	Blue

Special Medium	Oxidase test	Gram stain
Cetrimide Agar Medium	Positive	Negative cocci
Pseudomonas-Agar Medium for detection of Fluorescin	Positive	Negative cocci
Pseudomonas-Agar Medium for detection of Pyocyanin	Positive	Negative cocci

(7007.4) *Staphylococcus aureus*

Take a quantity of the specimen add Fluid Casein Soybean Digest Medium and make up to 100 mL, mix well, incubate at 30~35℃ for 24 to 48 hours, observe the growth of microorganisms. If the colonies are produced, use an inoculating loop dip in the incubated media, streak on the surface of Vogel-Johnson Agar Medium, Baird-Parker Agar Medium, or Mannitol-Salt Agar Medium. Cover, invert the plates, and incubate at 30~35℃ for 24 to 48 hours, observe the result. Interpret the results with reference table below. If no colonies have the characteristics described on the table, the test specimen meets the requirements for the absence of *Staphylococcus aureus*. For confirming any suspect colonies as *Staphylococcus aureus*, apply the coagulase test. Transfer representative colonies respectively to tubes contained 0.5 mL of mammalian plasma (preferably rabbit or horse), incubate in a water bath at 37℃. Examine the coagulation of incubation after 3 hours and keep observing with suitable intervals up to 24 hours. Comparing with positive and negative controls, the absence of a coagulase reaction indicates the absence of *Staphylococcus aureus* in the tested article.

Special Medium	Colony characters	Thrombin tests	Gram stain
Vogel-Johnson Agar Medium	Black, surrounded by yellow circle	Positive	Positive cocci
Mannitol-Salt Agar Medium	Colorless to yellow	Positive	Positive cocci
Baird-Parker Agar Medium	Black, shiny, enclosed by a clear ring 2~5 mm	Positive	Positive cocci

VIII. Potency Assays (Bioassays)

Please refer to the general notice of Chinese Pharmacopeia (7th Edition).

IX. Reagents and Test Solutions

Reagents are substances used for chemical tests or microscopic identification.

Test Solutions, abbreviated "TS," are solutions of reagents in such solvents and of such definite concentrations as to be suitable for the specified purposes.

Indicators are reagents used to determine the specified end-point in a chemical reaction or to measure hydrogen-ion concentration (pH).

Indicators test papers are the papers saturated with indicators to measure hydrogen-ion concentration (pH).

Colorimetric Solutions, abbreviated "CS", are solutions of such definite concentrations used in the preparation of colorimetric standards for comparison purposes.

Volumetric Solutions, abbreviated "VS" and known also as standard solutions, are solutions of reagents of known concentration intended primarily for use in quantitative determinations. Concentrations are usually expressed in terms of normality.

Reagents, test solutions, indicators, colorimetric solutions and volumetric solutions should be preserved in containers made of glass with low alkali release, high hydrolytic resistance, and without arsenic and lead. The containers should be hermetic for preventing the concentration changing from evaporation. Light-sensitive reagents or solutions should be stored in light-blocking containers. Stoppers and stopcocks brought into contact with substances capable of attacking or penetrating their surfaces may be given a protective coating of a thin film of wax or a suitable lubricant unless specifically interdicted.

Please refer to the other pharmacopeias for the reagents and solutions that are not listed in these sections.

(9001) Reagents

Unless otherwise specified, use the determination described below.

I. Limit Test for Insoluble Substance

Add a quantity of sample in a beaker, and dissolve in 100 mL of hot water unless otherwise directed. Cover the beaker with a watch glass, warm on a boiler for 1 hour, and filter the hot solution through a tared sintered-glass crucible or Gooch crucible. Wash the residue with hot water, dry at 105~110℃, and weigh.

II. Limit test for chloride

Chloride standard solution: Dissolve 165.0 mg of dry sodium chloride in an appropriate amount of water to 1000 mL, produce a solution contained 0.10 mg of chloride per mL.

Assay: Dissolve a quantity of sample in 25 mL of water, as prescribed under individual monographs. If the solution is alkaline, neutralize with nitric acid dropwise until litmus paper as neutral, and then add 3 mL more of nitric acid. If necessary, filter with the wet filter which does not contain chloride. Add 1.0 mL of silver nitrate to the filtrate, mix well, and stand for 5 minutes protected from direct light. If there has turbidity, the solution can't be concentrated than the control group of standard chloride solution which has the same concentration as the chloride limitation.

If the solution of barium salts is alkaline, neutralize with nitric acid dropwise, add 3 more drops of nitric acid, and follow the method as described above.

If the test solution has color, dissolve 2.0 g of test specimen in 25 mL of water, add 3 mL of nitric acid, if necessary, filter with a wet filter paper which does not contain chloride, divide the filtrate into two equal parts, to one part add 1.0 mL of silver nitrate, mix and stand for 10 minutes. If the solution is turbidity, filter with wet filter papers until the filtrate is perfectly clear.

The filtrate which is filtered after divided is as the control solution, the other one is as the test solution. Follow the method as described above to operate.

III. Limit test for total heavy metals

Lead standard solution: Refer to (General rule 3005), produce a solution contained 0.01 mg of lead per mL.

Assay: If the limit of total heavy metals is 5 ppm, dissolve 6.0 g of test specimen in an appropriate amount of water to 42 mL. Take 7 mL of the solution to Nessler cylinder, add a quantity of lead standard solution (the content of lead should be equivalent to 4.0 g of test specimen), dilute with water to 40 mL and add 2 mL of dilute acetic acid as the control solution. To other cylinder add 35 mL of the solution, dilute with water to 40 mL, and add 2 mL of dilute acetic acid. To each cylinder add 10 mL of hydrogen sulfide and mix well. Compare the color by viewing down the vertical axis of the two cylinders with a white background. The color formed in the test solution should not be darker than the color in control solution.

If the limit of total heavy metal is 10 ppm or more, or the solubility is limited, dissolve 4.0 g of test specimen in water to 40 mL, if necessary, heat gently. To 10 mL of the solution, add a quantity of standard lead solution (equal to the lead content in 2.0 g of test sample), dilute to 40 mL. Dilute 30 mL of remaining solution with water to 40 mL. Carry out the method as described above.

If the test specimen tested for heavy metals is salt of aliphatic organic acid, when making the solution, replace the dilute acetic acid by 1 N hydrochloric acid.

IV. Limit test for iron

Iron standard solution: Add 863.4 mg of ferric ammonium sulfate in an appropriate amount of water, add 10 mL of dilute sulfuric acid, dilute with water to 100.0 mL, transfer the solution to a 1000-mL volumetric flask, add 10 mL of dilute sulfuric acid, add water to volume and mix well. Produce a solution contained 0.01 mg of iron per mL.

Assay: Dissolve a quantity of test specimen as described under individual monographs in 45 mL of water, or prepare test solution as indicated then dilute with water to 45 mL. Add 2 mL of hydrochloric acid, mix well, and add 50 mg of ammonium sulfate and 3 mL of ammonium thiocyanate solution, if the red color appears. The color of the test specimen should not be darker than the control solution contained a volume of standard iron solution as described under individual monographs.

V. Limit Test for Phosphates

Phosphate standard solution: Dissolve 143.0 mg of potassium dihydrogen phosphate in water to 1000 mL. The solution contains 0.10 mg of phosphates per mL.

Phosphate reagent I: Dissolve 5.0 g of ammonium molybdate in 1 N sulfuric acid to 100 mL.

Phosphate reagent II: Dissolve 200 mg of 4-Methylaminophenol sulfate in 100 mL of water, add 20.0 g of sodium hydrogen sulfite and mix well. This reagent stores in a glass bottle with stopper tightly, and it can't use after a month.

Assay: Weigh a quantity of the test specimen as described under individual monographs, dissolve in 20 mL of water, heat if necessary, add 2 mL of 25% sulfuric acid (or dissolve the test specimen or residue in 20 mL of 0.5 N sulfuric acid), and add 1 mL of reagent Ⅰ and reagent Ⅱ, dilute to 25 mL with water , mix well and stand for 2 hours. If the blue color is produced, the color of the test specimen should not be darker than the control solution contained a volume of standard phosphate solution as described under individual monographs and subjected to the same treatment.

VI. Limit test for sulfates

Sulfate standard solution: Dissolve 181.0 mg of potassium sulfate in water, and add an appropriate amount of water to 1000 mL. Produce a solution contained 0.10 mg of sulfates per mL.

Assay: Dissolve a quantity of test specimen as described under individual monographs in 25 mL of water, if the solution is alkaline, neutralize with hydrochloric acid, use litmus paper as an indicator, add 1 mL of 1 N hydrochloric acid, filter with a wet filter paper if necessary, add 2 mL of barium chloride to the solution, mix well and stand for 10 minutes. If the solution is turbidity, the concentration of the test specimen is not more concentrated than the control solution contained a volume of standard sulfate solution as described under individual monographs and subjected to the same treatment.

VII. Determination of residue on ignition

Weigh accurately 1~2 g of test specimen, put in a crucible that previously has been ignited, cooled, and weighed. Ignite the sample slowly at first and then strengthen firepower, until the organic portion is thoroughly charred, and the inorganic portion completely volatilize. If the monographs do not point out using sulfuric acid, the test specimen can be ignited directly at 800±25℃ to constant. If the monographs point out using sulfuric acid, cool the crucible, add the specified amount of sulfuric acid, slowly heat until no smoke, and ignite the crucible at 800±25℃ to constant. Ignition should be in a well-ventilated hood but protected from air current, and the temperature is as low as possible to completely combust the carbon. A muffle furnace may be used, ignited at 800 ± 25° is recommended to use muffle furnace.

The reagents and standard for this pharmacopoeia is as follow.

Acetic Acid

CH_3COOH molecular weight: 60.05

Acetic acid is a solution containing 36.0~37.0% of $C_2H_4O_2$.

Characters:

1. General nature: A clean, colorless liquid; odor, irritate; with acidic reaction on litmus paper.
2. Solubility: Miscible with water, ethanol, or glycerin.
3. Specific gravity: The specific gravity of acetic acid is about 1.045 (General rule 1005).

Identification: It responds to the acetate tests (General rule 2001).

Impurities and other requirements:

1. Nonvolatile residue: Add 10 mL of acetic acid in a tared porcelain dish, evaporate to dryness on a boiler, dry at 105℃ for 1 hour, the weight of the residue is not more than 1.0 mg. Keep the residue for the following test.
2. Chloride: Add 5 drops of silver nitrate to 10 mL of acetic acid solution (1 in 10): no opalescence is formed.
3. Sulfate: Add 5 drops of barium chloride to 10 mL of acetic acid solution (1 in 10): no turbidity is produced.
4. Arsenic: Follow the rule (General rule 3006) to determine, and the limit of arsenic is 2 ppm.
5. Heavy metals: To the residue obtained in the test (1), add 8 mL of 0.1 N hydrochloric acid, warm gently until residue is completely dissolved, make up to 100 mL with water. Use 25 mL of solution for testing by method I (General rule 3005), the limit of heavy metals is 10 ppm.
6. Readily oxidizable substances: Add 4 mL of acetic acid in a glass bottle with stopper, then add 20 mL of water and 0.3 mL of 0.1 N potassium permanganate, and the liquid should not turn into brown from pink color immediately, and should

not fade or turn into brown color less than 30 seconds.

Assay: Add 6 mL of acetic acid in a tared glass bottle with stopper, and weight accurately. Dilute to 40 mL with water, then add phenolphthalein as indicator, titrate with 1 N sodium hydroxide. The titer of 1 N sodium hydroxide equals to 60.05 mg per mL of acetic acid.

Acetic Anhydride

$(CH_3CO)_2O$ molecular weight: 102.09

It contains more than 97% of $(CH_3CO)_2O$.

Characters: a clear, colorless liquid; odor, irritate; the boiling temperature is about 140℃.

Impurities and other requirements:

1. Nonvolatile residue: Add 30 mL of acetic anhydride in a tared porcelain dish, evaporate to dryness on a boiler, dry at 105℃ for 1 hour, the weight of the residue is not more than 1.0 mg.
2. Chloride: Add 37 mL of acetic anhydride, dilute to 200 mL, mix well. The quantity of chloride in 10 mL of the solution should not exceed 0.01 mg. (General rule 9001). Keep the left solution for further test.
3. Phosphate: To 10 mL of the solution (2), evaporate to dryness on steam bath, and dissolve the residues in 25 mL of 0.5 N sulfuric acid. The weight of phosphate in the solution should not exceed 0.02 mg. (General rule 9001)
4. Sulfate: Add 50 mL of the solution (2) to a beaker, add 10 mg of sodium carbonate, evaporate to dryness on steam bath. The weight of the sulfate in the residues is not over 0.05 mg. (General rule 9001)
5. Total heavy metals: Add 50 mL of the solution (2) to a beaker, add 10 mg of sodium carbonate, evaporate to dryness on steam bath. The total heavy metals limit is 2 ppm in the residues (General rule 9001).
6. Iron: Add 10 mL of the solution (2) to a beaker, add 10 mg of sodium carbonate, evaporate to dryness on steam bath. The iron content in the residues should not exceed 0.01 mg (General rule 9001).
7. Readily oxidizable substances: To 1.0 mL of the solution (2), add 0.4 mL of 0.1 N potassium permanganate, the pink color appear and the color does not disappear in 5 minutes.

Assay: Add about 2.0 g of the acetic anhydride in a tared glass bottle with stopper, and weight accurately. Add 10 mL of water which boiled and cooled, stopper and stand for 30 minutes, the solution of phenolphthalein is indicator, and titrate with 1 N sodium hydroxide. Then the percentage of the quantity of acetic anhydride is calculated by the equation below:

$$A = \frac{34.03V}{W} - 566.7$$

A: The percentage of the quantity of acetic anhydride.
V: the value of mL of the solution of sodium hydroxide.
W: the value of g of the test.

Acetone

CH_3COCH_3 molecular weight: 58.08

Acetone contains 99.5% or above of CH_3COCH_3.

Characters: Clear, colorless liquid; odor, irritate, miscible with water, ethanol, ether, and most of organic solution.

Impurities and other requirements:

1. Distilling range: To 100 mL of acetone, according to the method II of the boiling point (General rule 1003), all the distillate drive-off at 55.5~57℃. The deviation of the distilled temperature is less than 0.5℃ from 20th drop to 95 mL.
2. Nonvolatile residue: Add 125 mL of the sample in a tared porcelain dish, steam bath to dryness, dry at 150℃ for 1 hour. The weight of the residue is not more than 1.0 mg (0.001%).
3. Determination of the dilution: To 25 mL of acetone, add 25 mL of boiled and cooled water, mix well. The solution should keep clarify in 30 minutes, retain the solution.
4. Acidity: To the solution which is retained, add two drops of phenolphthalein as indicator, titrate with 0.1 N sodium hydroxide. The consumption of the alkali solution is less than 0.1 mL (0.003% of CH_3COOH).
5. Alkalinity: Add 25 mL of acetone in 25 mL of water. Mix well, and add one drop of methyl red. If the yellow color is produced, titrate with 0.1 N sulfuric acid, the acid consumption should not exceed 0.1 mL (0.001% of NH_3).
6. Aldehyde: To 10 mL of acetone, add 5 mL of ammoniacal silver nitrate, stand for 15 minutes in dark at 50℃. The solution should not appear brown color or form a precipitate.
7. Methanol: To 1 mL of acetone, dilute to 20 mL with water. To 5 mL of the solution, add 0.5 mL of phosphoric acid and 2 mL of potassium permanganate, stand for 10 minutes, add 15 mL of oxalic acid (1 in 10), until the solution is colorless, add 5 mL of 25% sulfuric acid and 5 mL of fuchsin sulfurous acid reagent, the blue or the violet color should not be formed within 10 minutes (0.1%).
8. Readily oxidizable substances: To 10 mL of acetone, add 0.05 mL of 1.0 N potassium permanganate. The red color is produced, and the color should not disappear within 15 minutes.

Assay: The specific gravity of acetone is not more than 0.788 (General rule 1005).

Acetonitrile

CH_3CN molecular weight: 41.05

Characters: Clear, colorless liquid, miscible with water, and the specific gravity is 0.780~0.783.

Impurities and other requirements:

1. Acidity or alkalinity: To 10% (v/v) of acetonitrile should be neutral to litmus solution.
2. Distilling range: Follow the determination of boiling point (General 1003) to distill, the distillate is produced at 80~82 ℃ and the concentration should be above 95%.
3. Determination of the absorbance: Test the acetonitrile with spectroscopy, the wave length at 250~280 nm, and use the 1 cm of cell to determine with suitable spectrophotometer, comparison of the reference of air is below 0.01.

Alcohol

C_2H_5OH molecular weight: 46.07

Alias: Ethanol; Spirit

Alcohol contains more than 92.3% (w/w) of C_2H_5OH at 15.56℃, or more than 94.9% (v/v).

Characters:

1. General Characteristics: Clear, colorless, fluidity and volatile liquid. Odor slightly, burn easily, also volatile easily in low temperature.
2. Solubility: Miscible with water, ether, or chloroform.
3. Specific gravity: The specific gravity of ethanol should be less than 0.789 at 25 ℃ (General rule1005).
4. Boiling point: The boiling point is about 78℃ (General rule 1003).

Identification:

1. To 5 mL of alcohol (1 in 200), add 1 mL of 1 N sodium hydroxide, and gradually add 2 mL of iodine TS, then release the odor of triiodomethane, the yellow precipitate is formed.
2. For few drops of sample, add 1 mL of sulfuric acid and a few drops of potassium dichromate. The green color is formed in solution, and release odor of acetaldehyde.

Impurities and other requirements:

1. Water-insoluble: Dilute with equal volume of water, the solution does not opacity, cool down to 10℃, it should be clarification in 10 minutes.
2. Acidity: To 50 mL of the alcohol in the glass bottle with stopper. Add 50 mL of boiled and cooled water and a few drops of phenolphthalein, titrate with 0.02 N of sodium hydroxide; the pink color of the solution does not disappear within 30 seconds, the consumption of the alkali solution should not exceed 0.9 mL.
3. Nonvolatile residue: Add 40 mL of alcohol in a tared porcelain dish, become dryness on a steam bath, and then dry at 105℃ for 1 hour. The weight of the residue is not more than 1.0 mg.
4. Fusel oil: To 10 mL of ethanol, add 5 mL of water and 1 mL of glycerol, mix and fractionated dumping the solution to a wet, odorless filter, and volatile it naturally. The remaining of the residue should be without any obvious odor.
5. Amyl alcohol and nonvolatile readily carbonizable substance: Add 25 mL of the alcohol in a porcelain dish and avoid dust, and let it naturally volatilize, add a few drops of sulfuric acid, the red or brown color is not formed in the solution.
6. Aldehyde and other organic impurity: Add 20 mL of the alcohol in a clean glass cylinder with stopper (the cylinder is washed with hydrochloric acid at first, and then with water, with sample at last), cool down to 15℃, add 0.1 mL of 0.1 N potassium permanganate by using a clean pipette, and record the accurate adding time, then close the lid immediately, bottom-up the cylinder and mix, stand for 5 minutes at 15℃, and the pink color does not totally disappear in the solution.
7. Ketones, Isopropyl alcohol and *tert*-butanol— To 1 mL of alcohol, Add 3 mL of water and 10 mL of mercury sulfate, heat on a boiling boiler and the precipitate is not formed in 3 minutes.
8. Methanol: To one drop of the alcohol, add one drop of water, one drop of dilute phosphoric acid (1 in 20), one drop of potassium permanganate (1 in 20), mix and stand for a minute. Add one drop of sodium bisulfite (1 in 20), until the color of the potassium permanganate disappears .If the solution is still brown, add one drop of dilute phosphoric acid to make the solution become clear, then add 5 mL of new made chromotropic acid, heat on a boiler at 60℃ for 10 minutes, the violet color should not be produced.

In the preparation of 70, 80, 90 % ethanol, take ethanol and water at 25℃.

Alcohol % (v/v)15.56 ℃	Specific gravity 25℃	Ratio		Amount of 94.9% alcohol (v/v) in preparation of 100 mL
		Ethanol (mL)	Water (mL)	
70	0.884	38.6	15.0	73.7
80	0.857	45.5	9.5	84.3
90	0.827	51.0	3.0	94.8

Alcohol, Dehydrated

C_2H_5OH molecular weight: 46.07

Alcohol, Dehydrated contains 99.5% or above (v/v) of C_2H_5OH.

Characters: Colorless, fluidity, volatibility solution, odor, smell burning, humid attractive.

Impurities and other requirements: Except for the determination as described below, the other item should be conformed to the provision of the determination of ethanol impurity (General rule 9001).

1. Nonvolatile residue: Add 60 mL of alcohol, dehydrated to a tared porcelain dish on a steam bath, dry at 105℃ for 1 hour. The weight of the residue is not more than 0.5 mg (0.001%).
2. Alkalinity residue: To 25 mL of the alcohol, dehydrated, dilute with 25 mL of water, add 1 drop of methyl red, and titrate with 0.02 N sulfuric acid until the pink color is produced. The acid consumption is not over than 0.20 mL (0.0003% of NH_3).
3. Readily carbonizable residue: Add 10 mL of sulfuric acid to a conical flask, and cool down to 10℃. Then take 10 mL of alcohol, dehydrated, drips slowly. The color of the solution should not be darker than brown.

Assay: The specific gravity of the substance is not more than 0.7900 (25℃/25℃).

Alcohol, Neutralized

To a quantity of alcohol, add 2~3 drops of phenolphthalein as indicator, titrate with 0.02 N or 0.1 N sodium hydroxide until the pink color is formed. Prepare freshly before use.

Alcohol, Aldehyde-free

Add 1000 mL of alcohol to a glass bottle with stopper, add 5 mL of lead acetate (1 in 2) and mix well. Add 5.0 g of potassium hydroxide to 25 mL of warm ethanol, cool down, slowly add it to potassium hydroxide-ethanol solution, stand for 1 hour, shake hard and stand overnight. Pour out the supernatant liquid, and distill.

Ammonium Molybdate

$(NH_4)_6Mo_7O_{24} \cdot 4H_2O$ molecular weight: 1235.95

Ammonium molybdate contains about 81%~83% of MoO_3.

Characters: Colorless, slightly green or yellow crystals. Soluble in water; insoluble in ethanol.

Impurities and other requirements:

1. Insoluble matter: To 10.0 g of ammonium molybdate, dissolve with 100 mL of hot water, cover a watch glass, place in a tared porcelain dish on a steam bath for one hour, filter (reserve the filtrate for later use), rinse the residue, dry at 105℃ for 1 hour. The weight of the residue is not more than 1.0 mg (0.01%).
2. Chloride: To 1.0 g of ammonium molybdate, dissolve with 20 mL of water, then slowly infuse the solution in 5 mL of nitric acid, this solution contains less than 0.02 mg (0.002%) of chloride (General rule 9001).
3. Nitrate: To 1.0 g of ammonium molybdate, dissolve with 10 mL of water which contains 5 g of sodium chloride, and add 0.1 mL of indigo carmine TS and 10 mL of sulfuric acid, the blue color of the solution should not disappear completely within 5 minutes (about 0.003% of NO_3).
4. Phosphate: To filtrate of (1), add 10 mL of ammonia TS, infuse in the solution which is combined with 50 mL of nitric acid and 75 mL of water, shake 5 minutes at 40℃, stand for 1 hour. If the turbidity is produced, the concentration of PO_4 of the sample should not be higher than 0.05 mg (about 0.0005% of PO_4) in control test solution. (General rule 9001).
5. Sulfate: To 1.0 g of ammonium molybdate, dissolve with 10 mL of hot water, add 5 mL of nitric acid, evaporate to dryness on a steam bath, add 1 mL of hydrochloric acid and 10 mL of water to the residues and filter. Wash the filtered residue with water, and the volume of water and filtrate to 50 mL. The 10 mL of the filtrate contains less than 0.6 mg of SO_4 (0.03%) (General rule 9001).
6. Total heavy metals: To 1.0 g of ammonium molybdate, dissolve with 25 mL of water, add 10 mL of 10 % sodium hydroxide and 2 mL of ammonia TS, and dilute with water to 40 mL. The total heavy metals limit is 20 ppm (General rule 9001).
7. Magnesium and cognate cation: To 5.0 g of ammonium molybdate, dissolve with 50 mL of water, filter if necessary, add 500 mg of sodium carbonate and 10 mL of sodium hydroxide (1 in 10) to the filtrate, boil it slowly for 5 minutes. If the precipitate is produced, then cool, filter, wash the precipitates with the solution of ammonia (1 in 40) and ignite. The weight of the residue is not more than 1.0 mg (0.02%).

Assay: Weigh accurately 1 g of ammonium molybdate in a mixture of 10 mL of water and 1 mL of concentrated ammonia in a 250-mL volumetric flask, dilute with water to 250 mL and mix. Transfer 50.0 mL of the solution (filter it, if necessary) to a 600-mL beaker. Add 250 mL of water, 20.0 g of ammonium chloride, 15 mL of hydrochloric acid, and few drops of

methyl orange, heat nearly to the boil. Add 18 mL of lead acetate solution, add a saturated solution of ammonium acetate slowly with constant stirring, until the solution becomes alkaline, and then add 15 mL of saturated solution of ammonium acetate. Heat just below the boiling point until the precipitate has settled. Filter through a tared, porous porcelain crucible, wash seven times with ammonium acetate solution (mixture of 10 mL nitric acid and 1000 mL ammonium acetate solution) and then wash with three successive portions of hot water. Ignite to constant weight at 600℃. The weight of the residue multiply 0.3921 is equal to the quantity of the test specimen which contains MoO_3.

Aniline

$C_6H_5NH_2$ molecular weight: 93.13

Characters: A colorless or pale yellow, clear liquid, the specific gravity is 1.02, slightly soluble in water and miscible with ethanol and ether.

Impurities and other requirements:

1. Distilling range: To 100 mL of specimen, follow the method II of determination of boiling point (General rule 1003) to distill, the distillate produce at 183~186℃ should reach 95 % or above.
2. Ignite residue: To 20 mL of test specimen, ignite after evaporating it to dryness. The residue is not more than 1.0 mg (0.005%).
3. Hydrocarbon and nitrobenzene: To 5 mL of test specimen, mix with 10 mL of hydrochloric acid, the hot solution should be clear, dilute with 15 mL of water and the solution should maintain clear.

Antimony Trichloride

$SbCl_3$ molecular weight: 228.13

Characters: Colorless or translucent crystals; easy deliquescence. Hydrolysis with water and produce antimony oxychloride. Also soluble in hydrochloric acid, ethanol, or chloroform, the melting point is 72℃ and the boiling point is 230℃.

Impurities and other requirements:

1. Solubility in chloroform: To 5.0 g of test specimen, add 10 mL of chloroform, the clean or slightly turbidity solution is produced.
2. Arsenic: To 0.5 g of test specimen, dissolve with 10 mL of acidic stannous chloride, stand for 1 hour, the light brown color is formed in the solution.
3. Hydrogen sulfide: To 1.0 g of specimen, dissolve with 3 mL of hydrochloric acid, dilute with water to 100 mL, antimony is totally precipitated by adding hydrogen sulfide, filter it (reserve the precipitate for later use). To 5 mL of the filtrate, add few drops of sulfuric acid, ignite it after evaporating the solution to dryness. The residue is not more than 1.0 mg (0.2%). Reserve the residue for later use.
4. Iron: To the residue of (3), add 2 mL of hydrochloric acid and few drops of nitric acid, place in a tared porcelain dish on a steam bath, then add 4 mL of hydrochloric acid and dilute with water to 10 mL. To 5 mL of the solution, dilute with water to 50 mL. The quantity of Fe which contains in the solution is not more than 0.025 mg (0.01%) (General rule 9001).
5. Other total heavy metals: To the precipitate of (3), add the red solution of ammonium sulfide, the precipitate dissolve completely.

Benzene

C_6H_6 molecular weight: 78.11

Characters: A colorless, clear, and inflammable liquid, odor, the specific gravity is about 0.876, insoluble in water, miscible with ethanol or ether.

Impurities and other requirements:

1. Distilling range: To 100 mL of test specimen, follow method II of the determination of boiling point (General rule 1003), the distillate is produced at 79.5~80.5℃ and the distillate should be above 95 mL.
2. Freezing point: The freezing point of the test specimen is above 5.2℃. (General rule 1001)
3. Nonvolatile residue: Evaporate 115 mL of test specimen in a tared porcelain dish on a steam bath, dry at 105~110℃ for 30 minutes: The weight of the residue is not more than 1.0 mg (about 0.001%).
4. Moisture: Place 10 mL of test specimen in a tube (16×150 mm), stopper, immerse in crushed ice, and the solution is clear for 3 minutes.
5. Sulfide: Place 30 mL of potassium hydroxide which is made by ethanol in a conical flask, add 6 mL of test specimen, connect on a reflux condenser, and boil it slowly for 30 minutes. Remove the condenser, dilute with 50 mL of water, place in a tared porcelain dish on a steam bath, and the benzene and the ethanol are removed. Add 50 mL of bromine, heat for 15 minutes. Then the solution transfers to a beaker, neutralize with dilute hydrochloric acid (1 in 4), add 1 mL more of dilute hydrochloric acid, concentrate it to 50 mL, filter if necessary, boil the filtrate, add 5 mL of barium chloride, place in a tared porcelain dish on a steam bath, heat for 2 hours, place it overnight. If the precipitate is produced, then filter by a small filter, wash the residue with water, until the precipitate is not formed when the washing liquid contacts with silver nitrate, then ignite it. The quantity of the residue is calibrated by a blank test. The quantity is not more than 2.0 mg (0.005% of S).

6. Readily carbonizable substance: To 25 mL of the test specimen, add 15 mL of sulfuric acid, shake for 15~20 seconds, stand until it separate, the acidic liquid or the liquid of benzene should not be dark. Reserve the mixed liquor for later use.
7. Thiophene: To the mixed liquor of upper item, shake well, stand for 1 hour, the blue or green color is not formed in the acidic layer.

Boric Acid

H_3BO_3 molecular weight: 61.84

Boric Acid contains 99.5~115.0% of H_3BO_3, calculate on the dried basis.

Characters:

1. Characteristics: Colorless crystals or crystalline powder; with pearl-like luster. Odorless, slightly acid and bitter taste followed with sweet taste. A slightly smooth feel when your fingers twist it, no change exposed to air, the litmus paper has acid reaction in the solution.
2. Solubility: 1.0 g of the test specimen can dissolve with 18 mL of water, 4 mL of boiling water, 18 mL of ethanol, 6 mL of boiling ethanol or 4 mL of glycerol.

Identification: It responds to the tests for borate (General rule 2001).

Impurities and other requirements:

1. Water insoluble: Add 25 mL of water to 1.0 g of the test specimen, the solution is clear.
2. Ethanol insoluble: Add 10 mL of boiling ethanol to 1.0 g of the test specimen, the solution should be clear.
3. Chloride: To 1.0 g of the test specimen, determine it by the determination of chloride (General rule 3003). If the turbidity is produced, the concentration of the test specimen should not be higher than 0.5 mL of 0.02 N hydrochloric acid of the control test.
4. Sulfide: To 2.5 g of the test specimen, determine it by the determination of the sulfide (General rule 3003). If the turbidity is produced, the concentration should not be higher than 1.5 mL of 0.02 N sulfuric acid of the control solution.
5. Arsenic: Determine it by the determination of the arsenic (General rule 3006). The quantity limit of arsenic is 5 ppm.
6. Total heavy metals: To 1.0 g of the test specimen, dissolve with 23 mL of water, add 2 mL of dilute acetic acid, determine it by the method I of determination of the total heavy metals (General rule 3005). The limit of total heavy metals is 20 ppm.

Assay: To about 1.5 g of boric acid, dry for 5 hours by silent gel, weigh accurately. Add 15 g of *d*-sorbitol and 10 mL of water, heat and dissolve it. After cooling, use phenolphthalein solution as indicator and titrate with 1 N sodium hydroxide. Each mL of 1 N sodium hydroxide is equivalent to 61.84 mg of H_3BO_3.

n-Butyl Alcohol

$C_4H_{10}O$ molecular weight: 74.12

Characters: Clear, colorless liquid, odor. Miscible with dehydrated alcohol and ether, the specific gravity is about 0.81.

Impurities and other requirements:

1. Distilling range: To the test specimen, follow the method II of determination of boiling point (General rule 1003) to distill it, the distillate is produced at 115~118℃ and above 95%.
2. Solubility in ethanol or ether: Mix 5 mL of the test specimen with 25 mL of absolute ethanol or ether, the solution should be clear.
3. Distillation residue: Evaporate 25 mL of the test specimen in a tared porcelain dish on a steam bath to dryness, and then dry at 105℃ for 1 hour: The weight of the residue is not more than 2 mg (about 0.01%).
4. Acidity: Add 25 mL of neutral ethanol to 10 mL of the test specimen, mix well, add 2 drops of phenolphthalein, and titrate with 0.1 N sodium hydroxide until the pink color appears. The volume of alkaline consumption should not exceed 0.2 mL.
5. Aldehyde: Add 20 mL of water and 2 mL of magenta sulphurous acid to 0.5 mL of the test specimen, mix well, stand for 10 minutes, and prepare the other blank solution. If the color appears in the test solution, the color of the test solution should not be darker than the color of the blank solution.

Carbon Disulfide

CS_2 molecular weight: 76.14

Characters: Clear, colorless, volatile liquid, inflammable, odorless for new products. When it contacts the air, it changes to yellow and produces odor. Slightly soluble in water, and easily soluble in ethanol, chloroform, or ether, the specific gravity is about 1.26.

Impurities and other requirements:

1. Distilling range: To 100 mL of the test specimen, follow the method II of determination of boiling point (General rule 1003) to distill it, the distillate is produced at 46 ~ 47℃, and the distillate is above 95 mL.
2. Distillation residue: To 40 mL of the test specimen dry at 50~ 60℃, and then dry at 60℃ for 1 hour: The weight of the residue is not more than 1 mg (0.002%).

3. Other sulfide and dissolved sulfuric: Place 2 mL of the test specimen in a dried tube, add a small amount of mercury, shake for 2 minutes, the color of mercury ball changes slightly, but remain the original luster.
4. Sulfite and sulfate: Place 10 mL of test specimen in a fraction collector, add 10 mL of water, shake for 5 minutes, stand until liquids are separated, and remove the separation of carbon disulfide. Add 1 drop of 0.1 N iodine solution, the color of the solution become yellow or violet, add 1 mL of barium oxide. It should not be turbidity within 15 minutes.
5. Moisture: Place 10 mL of test specimen in a tube, cool down to 0℃. The solution should not be turbidity or produce droplets.

Chloroform

$CHCl_3$ molecular weight: 119.39

Anesthetized with chloroform: Anaesthetic chloroform The substance is trichloromethane, which contains 1.0 ~ 2.0 % (v/v) of ethanol.

Character:

1. General Characteristics: Colorless, odor, volatile liquid, taste burning and slightly sweet.
2. Solubility: Slightly soluble in water, miscible with ethanol, ether, fixed oil, volatile oil.
3. Boiling point: The part of the substance with boiling point below 60℃ does not exceed 5.0% (v/v); the boiling point of the other part is about 60~62℃ (General rule 1003).
4. Specific gravity: the specific gravity is 1.474~1.478 (General rule 1005).

Identification: The substance is nonflammable, green, toxic and special smell flame is produced when the vapor lead in a Bunsen burner. Add 1 drop of aniline and 1 mL of sodium hydroxide (1 in 6) to 1 drop of the test specimen, heat it and release the odor of phenyl isocyanide (Note: the product is toxic).

Impurities and other requirements:

1. Acidity, chloride, free chlorine: Add 20 mL of boiled and cooled water to 10 mL of the test specimen, shake for 3 minutes, stand for dividing to two layers. The water layer determine by the test below.
   (1) Acidity: Add 0.1 mL of neutral litmus solution to 5 mL of the solution. The color of the test specimen should be same with the color of the reference which adds 0.1 mL of neutral litmus and 5 mL of boiled and cooled water.
   (2) Chloride: Add 5 mL of water and 0.2 mL of silver nitrate to 5 mL of the solution, opalescence should not be produced.
   (3) Free chlorine: Add 1 mL of cadmium iodide and 2 drops of starch TS to 10 mL of the solution, the blue color should not be produced.
2. Aldehyde: Add 5 mL of water and 0.2 mL of alkali mercuric potassium iodide to 5 mL of test specimen, place the solution in a glass bottle and shake, stand for 15 minutes in dark, then pale yellow is produced.
3. Decomposition products: Place 20 mL of the test specimen in a glass-stopped bottle which is washed with sulfuric acid, and add 15 mL of sulfuric acid and 4 drops of methyl aldehyde. Shake for 30 minutes in dark, stand for 30 minutes, and the pale color is formed in the layer of sulfuric acid.
4. Other organic substances and other chlorine compounds: Place 20 mL of test specimen in a glass-stopped bottle washed by sulfuric acid which does not contain chloride, add 10 mL of sulfuric acid which does not contain chloride, shake for 5 minutes, stand for 30 minutes in dark, no color should be produced in both of layers.
5. Other organic substances: To 2 mL of sulfuric acid which is from the layer of sulfuric acid, after adding 5 mL of water, the solution should be clear and odorless. Add more 10 mL of water and 0.2 mL of silver nitrate, the opalescence should not be produced.
6. Other chlorine compounds: To 15 mL of the solution from the layer of chloroform, put the solution in the glass bottle, add 30 mL of water and shake for 3 minutes, stand for dividing to two layers. Add 0.2 mL of silver nitrate to the water layer, stand for 5 minutes in dark, the opalescence should not be produced.
7. Eliminate the Stink: Place 10 mL of the test specimen on a filter paper, vaporize in the warm place, it should not be stink.
8. Non-volatile matter: Place 25 mL of the test specimen in an evaporating dish and evaporate it to dryness, and then drying at 105℃, the quantity of the residue is not more than 1 mg.

Cyclohexane

C_6H_{12} molecular weight: 84.16

Characters: Clear, colorless liquid, odor of the benzene, insoluble in water, miscible with organic reagents, the specific gravity is 0.7760~0.780.

Impurities and other requirements:

1. Distilling range: Distill it by the method II of determination of boiling point (General rule 1003), the distillate is more than 95% at 80 ~ 82℃.
2. Freezing point: Determine it by the determination of the freezing point (General rule 1001), and the temperature should be 4.5~6.5℃.
3. Light absorbance: Use the radiation with 250 nm above wavelength, the solution should be colorless and continuous absorption.

Dextrose

$C_6H_{12}O_6 \cdot H_2O$ molecular weight: 198.18

Alias: *D*-Glucose

It may contains one molecule of hydration water or be anhydrous.

Characters:

1. General characters: Colorless crystal.
2. General Characteristics: Colorless crystal, white crystal powder or particle powder, without odor, taste sweet.
3. Solubility: Soluble in water easily, especially in boiling water, soluble in boiling ethanol, slightly soluble in ethanol.
4. Specific rotation: After drying at 105˚C for 16 hours, add 0.2 mL of ammonia TS to 10.0 g of test specimen, add water to 100 mL. Determined the specific rotation by specific rotation (General rule 1007), the specific rotation is between +52.5˚~ +53˚.

Identification: Add a few drops of the test specimen (1 in 20) to 5 mL of hot alkaline cupric tartrate, a red precipitate of cuprous oxide is produced.

Determination of impurity and other requirements:

1. Color of the solution: To 25.0 g of test specimen, add sufficient volume of water to 50 mL, the color should not darker than the color of the reference which is prepared as described below. The control solution prepared by mixing 1.0 mL of cobaltous chloride, 3.0 mL of ferric chloride, and 2.0 mL of cupric sulfate, add water to 10 mL, mix well. When starting colorimetric test, dilute 3 mL of this solution with water to 50 mL, serve as control solution. Make the comparison by viewing the test solutions and the control solution downward in matched colorimetric tubes on a white surface.
2. Acidity: Dissolve 5.0 g of test specimen in 50 mL of boiled and cooled water. Add 3 drops of phenolphthalein, and titrate with 0.02 N sodium hydroxide to the production of a distinct pink color, the alkali solution consumption is not more than 0.50 mL for neutralization.
3. Loss on drying: After drying at 105℃ for 16 hours, the loss of hydrous water is between 7.5%~9.5% of its weight, and the anhydrous form is not more than 0.5% of its weight. (General rule 3001)
4. Residue on ignition: After igniting it, the residue is not more than 0.1% (General rule 3002).
5. Chloride: Determine 2.0 g of test specimen by test for chlorides (General rule 3003). If the turbidity is produced, the concentration should not be higher than 0.5 mL of 0.02 N hydrochloric acid (180 ppm) in control solution.
6. Sulfate: Determine 2.0 g of test specimen by tests for sulfates (General rule 3003). If the turbidity is produced, the concentration should not be higher than 0.5 mL of 0.020 N sulfuric acid (250 ppm) in control solution.
7. Arsenic: Dissolve 3.0 g of the test specimen in water to make 35 mL of solution, determine it by the determination of arsenic (General rule 3006). The limit of arsenic is 1.3 ppm.
8. Total heavy metals: Dissolve 5.0 g of the test specimen in 23 mL of water to make the solution, determine it by the determination of total heavy metals method Ⅰ (General rule 3005). The limit of the total heavy metals is 5 ppm
9. Dextrin: To 1.0 g of test specimen fine powder in the flask, add 20 mL of alcohol, reflux to boil, the test specimen should be dissolved completely.
10. Soluble starch and sulfites: To 1.0 g of the test specimen, dissolve in 10 mL of water, add 1 drop of iodine TS, the liquid color is yellow only.

p-Dimethylaminobenzaldehyde

$(CH_3)_2NC_6H_4CHO$ molecular weight: 149.20

Character: White or pale yellow crystals, or crystalline powder. Slightly soluble in water, soluble in ethanol, ether, dilute hydrochloric acid, the melting point is 73 ~ 75℃.

Impurities and other requirement:

1. Residue on ignition: After igniting, the residue is not more than 0.1% (General rule 9001).
2. Solubility in ethanol: Dissolve 1.0 g in 25 mL of ethanol, completely dissolved.
3. Solubility in hydrochloric acid: Add 1.0 g of the test specimen to 20 mL of dilute hydrochloric acid, the solution should be colorless or slightly yellow.

2,4-Dinitrophenylhydrazine

$C_6H_3(NO_2)_2NHNH_2$ molecular weight: 198.15

Character: Reddish orange crystal, the monomer is citron yellow capillary crystal under the observation of microscope. Hard soluble in water and slightly soluble in ethanol, soluble in dilute mineral acid. The melting point is 197~200℃.

Impurities and other requirement:

1. Solubility in sulfuric acid: Add 500 mg of the test specimen to the mixture of 25 mL of sulfuric acid and 25 mL of water, the solution should be clear or slightly turbidity.
2. Residue on ignition: After igniting 500 mg of the test specimen, no residue remains (General rule 9001).

Ether

$(C_2H_5)_2O$ molecular weight: 74.12

Anaesthetic Ether.

Ether contains 96.0%~98.0% of $C_4H_{10}O$, the other components are alcohol and water.

NOTE**:**

1. Ether is highly volatile and flammable. Its vapor mixed with air may explode when contact with fire.
2. Ether which is used for anesthesia must be preserved in the tight container which is not more than 3-kg capacity, if it has been removed from the original container longer than 24 hour, and it is not to be used for anesthesia. Ether at the time of packaging in the large container should meet the requirements of the tests of this Pharmacopeia.

Characteristics:

1. General Characteristics: Colorless, easily volatile and flammable liquid. Odorous, taste burning and sweet. Slowly oxdized to peroxide by light and air. Boiling point is about 35℃.
2. Solubility: Soluble in water; miscible with ethanol, benzene, chloroform, petroleum benzine, fatty oil, volatile oil.
3. Specific gravity: Specific gravity of the test specimen is 0.713~0.716 (General rule 1005).

Determination of impurity and other requirements:

1. Acidity: Place 10 mL of 80 % ethanol in a 50-mL glass- stopper flask, and add 0.5 mL of phenolphthalein and 0.02 N sodium hydroxide until the pink color remains after shaking for 30 seconds. Add 25 mL of ether, stopper, and shake slowly. If no pink color remains, titrate with 0.02 N sodium hydroxide until the pink color is restored and persists. The second times alkali solution consumption is not more than 0.4 mL.
2. Non-volatile matter: To 50 mL of test specimen to a tared dish, evaporate spontaneously, and then dry at 105℃ for 1 hour. The weight of the residue is not more than 1 mg (30 ppm).
3. Odor: To 10 mL of test specimen, and place on a dry clean evaporating dish, allow to spontaneously to 1 mL, odorless. Place the residue on a filter paper, evaporate until trace of residue remain, it should be odorless except with ethanol smell.
4. Aldehyde: Place 20 mL of the test specimen in a glass- stopper cylinder, and add 7 mL of the mixture solution which is made by 1 mL of alkaline mercuric-potassium iodide TS and 17 mL of a saturated solution of sodium chloride. Stopper, shake vigorously for 10 seconds, and then stand for 1 minute: the water solution should not show turbidity.
5. Peroxide: Place 10 mL of the test specimen in a 25-mL graduated cylinder with glass-stopper, add 1 mL of new made potassium iodide solution (1 in 10). Place it in dark, shake for 1 hour, view on the white background, the layers of water and ether is colorless.

Ether Absolute

$C_2H_5OC_2H_5$ molecular weight: 74.12

Characteristics: The test specimen should meet with requirements of ether and requirements listed below.

Determination of impurity and other requirements:

1. Specific gravity: Not more than 0.710 (General rule 1005).
2. Evaporated residue: Allow 100 mL of test specimen to evaporate spontaneously in a tared evaporating dish, and dry at 105℃ for 1 hour, the weight of the residue is not more than 1.0 mg (0.0015%).
3. Odor: To 10 mL of test specimen, evaporate to 1 mL in evaporating dish, odorless. Place the residue in a wet filter paper, evaporate. No foreign odor.
4. Acidity: Place 10 mL of 80 % ethanol in a 50-mL glass-stopper flask, and add 0.5 mL of phenolphthalein and 0.02 N sodium hydroxide until a pink color persists for 30 seconds. Add 25 mL of ether, and shake slowly to mix. If no pink color remains, titrate with 0.02 N sodium hydroxide until the pink color is restored and persists after shaking 30 seconds. Not more than 0.2 mL of alkali solution is consumed at second time.
5. Aldehyde: Add 5 mL of 1 N potassium hydroxide to 10 mL of the test specimen. Keep the temperature at 25℃. Shake for 1 hour and avoid from light, no color present.
6. Peroxide: Place 10 mL of the test specimen in a clean glass-stopper (risen by the test specimen), add 1 mL of new made potassium iodide solution (1 in 10), stand for 1 hour. The yellow color should not appear in ether layer and water layer. The peroxide of the test is about 0.001 % by hydrogen peroxide calculated. The new made ether can meet the provision, but may produce the peroxide after several months stored.
7. Readily carbonizable substance: To 10 mL of sulfuric acid, cool to 10℃, slowly drop 10 mL of test specimen, stirring constantly, the pale color appear in the mixture.

Ethyl Acetate

$CH_3COOC_2H_5$ molecular weight: 88.11

Characters: Clear, colorless, flammable liquid. Soluble in water, miscible with ethanol, ether, fatty oil, volatile oil. The specific gravity is 0.896 ~ 0.898.

Impurities and other requirements:

1. Boiling point: Determine 100 mL of test specimen by boiling point method Ⅱ(General rule 1003) : the distillate is above 95% at 76~77.5℃.
2. Evaporated residue: Allow 20 mL of the test specimen to evaporate spontaneously from a tared evaporating dish, and then dry at 105℃ for 1 hour. The weight of the residue is not more than 1.0 mg (0.005%).
3. Acidity: It should not turn moist blue litmus paper red.
4. Other ester: Moisten a filter paper with 5 mL of test specimen, allow the test specimen evaporate. No foreign odor is detected after the evaporation.
5. Readily carbonizable substance: Carefully pour 5 mL of the test specimen on the surface of 5 mL of sulfuric acid along tube wall. The interface between the two liquids is without dark color.

Ferrous Sulfate

$FeSO_4 \cdot 7H_2O$ molecular weight: 278.03

It complies with the provisions of the specified Ferrous Sulfate, and it also complies with the provision as described below.

1. Insoluble matter: Dissolve 10.0 g of the test specimen in 100 mL of boiled and cooled water which contains 1 mL of sulfuric acid. The insoluble matter should not exceed 1 mg (0.01 %) (General rule 9001).
2. Ferric: Determine the ferric iron by the impurities of ferrous ammonium sulfate (General rule 9001). The quantity of the ferric in control solution (General rule 9001) is changed to 0.05 mg, the limit of the ferric in the test is 0.05%.

Formic Acid

HCOOH molecular weight:46.03

Formic acid contains more than 88 % of HCOOH.

Characters: Colorless liquid, highly pungent odor, strong corrosive, miscible with water or ethanol. The specific gravity is about 1.2.

Determination of impurity and other requirements:

1. Evaporated residue: Allow 40 mL of the test specimen to evaporate spontaneously on a boiler, and dry at 105℃ for 2 hours: The weight of the residue is not more than 1.0 mg (0.002%).
2. Ammonium salt: To 10 mL of test specimen, dilute with water to 100 mL. To 1.7 mL of the dilute solution, add 5 mL of sodium hydroxide (1 in 10), dilute with water to 50 mL and add 2 mL of mercuric-potassium iodide TS. If the color is present, it should not be darker than standard solution prepared with 0.01 mg of NH_4 (0.0005%) (standard solution prepared from NH_4Cl).
3. Dilute test: Dilute 5 mL of the test specimen in 15 mL of water, should not be turbidity within 1 hour.
4. Acetic acid: Dilute 1 mL of the test specimen with water to 100 mL. To 10 mL of the solution, add 1.5 g of hydrargyri oxydum navum, place it in a boiler, and filter after heating for 20 minutes. The filtrate is tested by blue litmus paper, and the litmus paper should not change to red in 30 seconds (about 0.4 % CH_3COOH).
5. Chloride: Dilute 2 mL in 20 mL of water, and add 3 mL of nitric acid and 1 mL of silver nitrate solution. If the solution is turbidity, it is not deeper than the standard test added with 0.025 mg of Cl (0.001%).
6. Sulfate: Add 10 mL of anhydrous sodium carbonate to 2 mL of test specimen, and place it in a boiler, evaporate to dryness. Dissolve the residue in 5 mL of water and 1 mL of 1 N hydrochloric acid and filter it, if necessary. Dilute the filtrate in water to 10 mL, add 1 mL of barium chloride, and stand for 10 minutes. If the turbidity is produced, the concentration should not be higher than 0.05 mg of SO_4 (0.002 %) (General rule 9001) in control solution.
7. Sulfite: Add 25 mL of water to 25 mL of the test specimen, add 0.1 mL of 0.1 N iodine solution, the solution appear as yellow (0.001 % of SO_2).
8. Total heavy metals: Place 5 mL in a boiler, evaporated to dryness. Dissolve the residue in 2 mL of dilute acetic acid, and dilute in water to 40 mL. Add 10 mL of hydrogen sulfide. If the brown color is produced, the color should not be darker than the color of the standard test added with 0.03 mg of Pb (0.0005 %) (General rule 9001).
9. Iron: Place 5 mL of the test specimen in a beaker, add 10 mg of anhydrous sodium carbonate, transfer it to a boiler, evaporate to dryness, dissolve the residue in 6 mL of hydrochloric acid and wash it in a volumetric cylinder, dilute in water to 60 mL. The quantity of Fe in 20 mL of the solution is not higher than 0.01 mg or 0.0005% (General rule 9001).

Assay: To a flask with 10 mL of water, weigh accurately, quickly add 1 mL of the test specimen, accurately weighed again. Dilute in 50 mL of water, add phenolphthalein solution as an indicator, titrate it with 1 N sodium hydroxide. Each mL of 1 N sodium hydroxide is equal to 46.03 mg of HCOOH.

Fuller's Earth, Chromatographic

Characteristics: Gray powder or granule, the main component is hydrous magnesium silicate.

Impurities and other requirement:

1. Fineness of powder: See (General rule 1015), the fineness of powder.

2. Loss on drying: Dry it at 105℃ for 6 hours, the loss weight is 7.0 %~10.0 %.
3. Soluble: Add 50 mL of cold water to 20.0 g of the test specimen and filter. After evaporated the filtrate to dryness, the residue does not exceed 60 mg (0.3 %). To 20.0 g of the test specimen, add 50 mL of cold ethanol and filter, after evaporated the filtrate to dryness, the residue is not more than 14 mg (0.07 %).

NOTE: If water content need to be adjusted, dry under lower pressure at room temperature to obtain the desired water content and shake for 2 hours to uniform.

Gallic Acid

$C_6H_2(OH)_3COOH \cdot H_2O$ molecular weight:188.14

Characteristics: White crystal or powder, slightly soluble in cold water, easily soluble in boiled water or ethanol.

Determination of impurity and other requirements:

1. Tannin: Add ferrite solution to the cold saturated solution of the test specimen, the color or precipitate is not produced; then add gelatin solution, the precipitate is not produced.
2. Ignite residue: Add 0.5 mL of sulfuric acid to 1.0 g of the test specimen, ignite it to constant weight, the residue is not more than 1.0 mg or 0.1% (General rule 9001).
3. Sulfate: Dissolve 1.0 g of test specimen in 50 mL of hot water, cool in cold water, filter. Add 1 mL of 1 N hydrochloric acid and 2 mL of barium chloride to the filtrate, the solution should not be turbidity in 5 minutes (about 0.02 % of SO_4).

Gelatin

Gelatin is a product obtained by the partial hydrolysis of collagen derived from the skin, white connective tissue, and bones of animals.

Characters:

1. General characters: Faintly yellow or amber translucent sheets, strip or powder. Odor as meat soup. Dried substance does not change in exposure to air, it can be decomposed by microorganisms when moisten or prepared as solution.
2. Solubility: Insoluble in cold water, it becomes swollen and soften by soaking in water for a long time, gradually absorbs 5~10 times quantity of water; soluble in hot water, it becomes gelling after cooling ; also soluble in hot mixture of water and acetic acid or hot water and glycerin; insoluble in ethanol, chloroform, ether, fatty oil, or volatile oil.

Identification:

1. To 10 mL of gelatin solution (1 in 100), add a mixture of 4 mL potassium dichromate (1 in 15) and 1 mL of dilute hydrochloric acid, a yellow precipitate is formed.
2. To gelatin solution (1 in 100), add trinitrophenol TS, a yellow precipitate is formed.
3. To gelatin solution (1 in 5000), add tannic acid, turbidity is produced.

Determination of impurity and other requirements:

1. Residue on ignition: Ignite 5.0 g of the test specimen without using sulfuric acid, the weight of the residue should not exceed 100 mg (2%) (General rule 3002). Reserve the residue for later used.
2. Odor and water-insoluble substances: Dissolve 500 mg of the test specimen in 20 mL of water and heat, a hot solution does not have any disagreeable odor. Pour the hot solution into a glass container to make up the 2 cm thick layer, view the layer which is slightly opalescent.
3. Sulfur dioxide: To 20.0 g of test specimen in a distillation flask, dissolve with 150 mL of water, add 3~5 drops of silicon resin, add 5 mL of phosphoric acid and 1.0 g of sodium bicarbonate, connect the flask with a condenser immediately. Immersed the outlet of condenser into 50 mL of 0.1 N iodine solution, heat and distill. Collect 50 mL of distillate. Acidify the distillate with a few drops of hydrochloric acid, add 2 mL of barium chloride TS, and heat on a boiler until the liquid is nearly colorless. If a precipitate of barium sulfate is formed, filter, wash with water and ignite the precipitate. The residue should not be more than 3 mg, correspond to sulfur dioxide residue is not more than 40 ppm. A blank test is made for any sulfate that may be present in 50 mL of 0.1 N iodine, make suitable calibration.
4. Arsenic: Mix 1.5 g of the test specimen with 10 mL of pepsin solution in an arsine generator flask, add 10 mL of nitric acid and 10 mL of perchloric acid, heat carefully, the strong fume of perchloric acid is formed. Cool, wash the sides of the generator with water, add 10 mL of nitric acid, heat again until the strong fume is formed. Cool, wash the sides of the generator with water, heat again until the strong fume is formed. Then cool, dilute it with water to 52 mL, add 3 mL of hydrochloric acid. Determine it by determination of arsenic (General rule 3006) (bypass the step of adding 20 mL of dilute sulfuric acid), the limit is 0.8 ppm.
5. Total heavy metal: To the residue obtained from the test for residue on ignition, add 2 mL of hydrochloric acid and 0.5 mL of nitric acid, and evaporate on a boiler to dryness. Add 1 mL of 1 N hydrochloric acid and 15 mL of water to the residue, and warm for few minutes. Filter and wash the residue with water to make the filtrate measure at 50 mL, mix. Determine 25 mL of filtrate by total heavy metals method Ⅰ (General rule 3005), the limit is 50 ppm.

6. Gel strength: Place accurately weighed 1.0 g of test specimen in a 200-mL flask, add 99 mL of water, after stand for 15 minutes, transfer it to a boiler at the temperature of 60℃, constantly spin the flask until the test specimen be dissolved totally. Place 10 mL of the solution in a tube which inner diameter is 12 mm, cool in a cold boiler, make sure the surface of the test specimen is lower than the surface of the water in the cold boiler, place the cold boiler in a freezer, maintain the temperature at 0℃. After 6 hours, take the tube from a freezer and invert it, the gel in a tube should be solid and not vibrate.
7. Limit of microorganisms: Determine the test specimen by limit of microorganisms (General rule 7007). The total plate count of each g should not exceed 1000, *escherichia coli* and salmonella should not present.

Glacial Acetic Acid

$C_2H_4O_2$ molecular weight: 60.05

Glacial Acetic Acid contains 99.5 %~100.5 % (w/w) of $C_2H_4O_2$ by weight.

Characters:

1. General Characteristics: Colorless, clear liquid, strong odor, acidity still present after diluting with sufficient water.
2. Solubility: Miscible with water, ethanol, or glycerol.
3. Freezing point: The freezing point is not less than 15.6℃ (General rule 1001).
4. Specific gravity: The specific gravity is about 1.049 (General rule 1005).
5. Boiling point: The boiling point is about 118℃ (General rule 1003).

Identification: A mixture of 1 volume of the test specimen with 2 volumes of water responds to the test for acetate (General rule 2001).

Determination of impurity and other requirements:

1. Limit of nonvolatile residue: Evaporate 20 mL of the test specimen in a tared dish, and dry at 105℃ in boiler for 1 hour, the weight of the residue is not more than 1.0 mg. Reserve the residue for later used.
2. Chloride: Dilute 1.0 mL of the test specimen with 20 mL of water, and add 5 drops of silver nitrate, no opalescence is produced.
3. Sulfate: Dilute 1.0 mL of the test specimen with 10 mL of water, and add 1 mL of barium chloride, no turbidity is produced.
4. Arsenic: Determine the test specimen by determination of arsenic (General rule 3006), the limit is 6 ppm.
5. Total heavy metal: To the residue obtained in (1), add 8 mL of 0.1 N hydrochloric acid, heat gently until the residue is completely dissolve, add water to 100 mL. To 25 mL of the solution, determine by determination of total heavy metals (General rule 3005), the limit is 10 ppm.
6. Readily oxidizable substances: Dilute 2 mL of the test specimen in a glass-stopper vessel with 10 mL of water, and add 0.1 mL of 0.1 N potassium permanganate, the pink color should not change to brown within 2 hours.

Assay: To about 2 mL of glacial acetic acid into a glass-stopper flask, accurately weigh. Dilute with water to 40 mL, use phenolphthalein solution as an indicator, and titrate with 1 N sodium hydroxide. Each mL of 1 N sodium hydroxide is equivalent to 60.05 mg of $C_2H_4O_2$.

n-Hexane

The substance is a mixture of several kinds of hexane isomers, mainly *n*-hexane and methylcyclohexane (C_6H_{12}), suitable for use in UV spectrophotometry.

Hexane Solvent

Characteristics: Clear, volatile liquid, similar odor like ether or petroleum ether, barely insoluble in water, soluble in absolute alcohol, miscible with ether, chloroform, benzene, and most fixed and volatile oils.
NOTE: It is easily flammable. Keep it away from flames, and store in tight containers in a cool place.

Determination of impurity and other requirements:

1. Appearance and color: Before taking the test specimen, shake well in the original container. To 100 mL of test specimen in a 100 mL colorimetric tube to compare with a standard solution containing platinum and cobalt. Two solutions should all be clear, with no suspension and precipitates. The color of the test solution should not be darker than the standard solution under light transmitting.
2. Odor: Should be odorless without unpleasant odor like thioalcohol or thiophenol.
3. Distilling range: To 100 mL of the test specimen determine it by determination of boiling point method Ⅱ (General rule 1003) at 30℃ or above, completely distilled at 30 ~ 60℃.
4. Limit of nonvolatile residue: Evaporate 150 mL of the test specimen to dryness, and dry at 105℃ for 30 minutes, the weight of the residue is not more than 1 mg (0.001%).
5. Acidity: To 10 mL of test specimen, add 5 mL of water, and shake for 2 minutes and allow two solvents to separate. The water layer should not turn the blue litmus paper to red within 15 seconds.
6. Heavy hydrocarbon oil: Slowly pour 10 mL of test specimen in the center of the filter, should not remain the unpleasant odor and the speck of grease after 30 minutes.

7. Spectral purity: The test specimen is used for chromatography which should meet with the requirements as described below. Place the test specimen in 1 cm cell, at the wavelength of 300 nm, the air as the control group, the absorbance should not exceed 0.08.

Hydrazine Sulfate

$(NH_2)_2 \cdot H_2SO_4$ molecular weight: 130.13

Dry in a sulfuric acid desiccator for 2 hours, it contains more than 99 % of $(NH_2)_2 \cdot H_2SO_4$.

Characteristics: Colorless crystal or a white crystalline powder. Slightly soluble in cold water, soluble in hot water, insoluble in ethanol.

Determination of impurity and other requirements:

1. Residue on ignition: After igniting, the residue is not more than 0.1 % (General rule 9001).
2. Chloride: Cl content is not more than 0.01 % (General rule 9001).
3. Total heavy metal: Dissolve 1.0 g of test specimen in 40 mL of warm water, add 10 mL of hydrogen sulfide solution, the solution does not appear dark colors.
4. Iron: To the solution obtained from upper item, alkalize by adding ammonia solution, if the green color is formed, the color should not be darker than the control solution with 0.01 mg of Fe (General rule 9001).

Assay: Place it in a sulfuric acid desiccator, dry for 2 hours, weigh accurately 100 mg, dissolve it in 20 mL of water. Add 1.0 g of sodium bicarbonate to the solution, shake to dissolve, titrate with 0.1 N iodine solution, add starch as an indicator when it close to end point. Each mL of 0.1 N iodine solution is equivalent to 3.253 mg of $(NH_2)_2 \cdot H_2SO_4$.

Hydrochloric Acid

HCl molecular weight: 36.46

Hydrochloric Acid contains 35 %~38.0 % of HCl by weight.

Characters: Colorless, fume liquid, irritating odor, the specific gravity is about 1.18.

Determination of impurity and other requirements:

1. Appearance: Shake in original container, place 10 mL in a 20 × 15 mm tube. Compare with the other tube filled with water, both of two liquids are clear, should not contain suspended matters. The color should not be different.
2. Residue on ignition: Place 85 mL of the test specimen in an platinum dish, evaporate to dryness, add 1 drop of sulfuric acid, and ignite for 5 minutes, cool and weigh, the remain of residue is not more than 0.5 mg (about 0.0005%).
3. Free chlorine: To 25 mL of test specimen, add 25 mL of boiled water and cool, add 2 more drops of potassium iodide (1 in 5) (not containing iodate) and 1 mL of carbon disulfide, shake well, the pink color is not produced within 30 seconds (about 0.0001 %).
4. Sulfate: To 20 mL of the test specimen add 100 mg of sodium carbonate, evaporate to dryness, the SO_4 in residue is not more than 0.05 mg (0.0002 %) (General rule 9001).
5. Sulfite: To 0.05 mL of 0.1 N iodine solution and several drops of starch TS add to 50 mL of boiled and cooled water, add the mixture of 5 mL of the test specimen and 50 mL of boiled and cooled water, shake and mix, the blue color does not disappear.
6. Arsenic: Dilute 17 mL (20.0 g) of the test specimen with triple volume of water, place it in a bigger gas generator, and determine it by determination of arsenic (General rule 3006). The arsenic spots are produced, it should not be more than the arsenic spots obtained in the blank test added with 0.002 mg of As_2O_3 (General rule 3006).
7. Total heavy metal: Place 17 mL of the test specimen in a beaker, add 10 mg of sodium carbonate, evaporate to dryness in a boiler, dissolve the residue in 2 mL of dilute acetic acid, and dilute with water to 40 mL, add 10 mL of hydrogen sulfide, if the dark color is formed, should not be darker than the control test added with 0.02 mg of Pb (0.0001%) (General rule 9001).
8. Iron: Place 17 mL of the test specimen in a glass dish or porcelain dish, add 10 mg of sodium carbonate, evaporate to dryness in a boiler, dissolve the residue in 2 mL of the test specimen, dilute with water to 50 mL, the solution containing Fe should not exceed 0.01 mg (0.00002%) (General rule 9001).
9. Ammonium salt: Place 4.2 mL of hydrochloric acid in a distillation flask, previously tared while containing about 30 mL of cold water, cool in crushed ice, carefully add 20 mL of sodium hydroxide (1 in 10), keep in the low temperature, cool. Add 20 mL of sodium hydroxide, the distillation flask connect with the condenser, let the tip of the tube under the surface of 10 mL of 0.1 N hydrochloric acid, then heat and distill, collect about 35 mL of the distillate, add 2 mL of alkaline mercuric iodide, if the yellow color is produced, it is not deeper than the control test added with 0.015 mg of NH_4 (0.0003%) (prepared by pure ammonium salt).

Assay: Place about 3 mL of hydrochloric acid in a glass-stopper flask, previously tared while containing about 30 mL of water, and weigh again to obtain the weight of the substance under assay. Dilute to 50 mL

with water, add methyl orange, and titrate with 1 N sodium hydroxide. Each mL of 1 N sodium hydroxide is equivalent to 36.46 mg of HCl.

Hydrogen Peroxide 30%

H_2O_2 molecular weight: 34.02

Hydrogen Peroxide contains 29.0 %~32.0 % of H_2O_2 by weight.

NOTE: It can not mix with any organic substances, in order to avoid explosion. Preserve in partially-filled containers with a small vent in the closure, and store in a cool place. The solution is corrosion to skin.

Characteristics: Colorless liquid, miscible with water, the specific gravity is about 1.1.

Determination of impurity and other requirements:

1. Non-volatile residue: To 18 mL of test specimen, evaporate to dryness in a boiler and dry at 105 ℃ for 2 hours. The residue should not exceed 1.0 mg (about 0.005 %).
2. Acidity: Dilute 9 mL (10.0 g) of the test specimen with 90 mL of boiled and cooled water, add several drops of methyl red solution, titrated with 0.02 N sodium hydroxide. The quantity of the alkaline liquid is calibrated by the blank test, not more than 0.3 mL of alkali solution is used for neutralization (0.003 %).
3. Chloride: Dilute 1 mL of the test specimen with 5 mL of water, add 1 mL of nitric acid and 1 mL of silver nitrate. If the solution is turbidity, it is not more concentrated than 0.01 mg of Cl in the control test.
4. Nitrate: To 1 mL of test specimen, add 10 mg of sodium carbonate, evaporate to dryness in a boiler, add 2 mL of phenol disulfonic acid, heat for 15 minutes in a boiler, cool and dilute it to 30 mL, the solution is alkalized by adding ammonia solution. If the yellow color is produced, it should not be darker than the control test added with 0.01 mg of NO_3 (prepared by pure potassium nitrate salt).
5. Phosphate: To 3.6 mL (4.0 g) of the test specimen, evaporate to dryness in a boiler, the residue of PO_4 should not exceed 0.02 mg (0.0005 %) (General rule 9001).
6. Sulfate: To 9 mL of test specimen, evaporate to dryness in a boiler. Dissolve the residue in 10 mL of water, and add 1 mL of dilute hydrochloric acid (1 in 20). Transfer it to a colorimetric tube, and add 1 mL of barium chloride. If the solution is turbidity, it is not more concentrated than 0.05 mg of SO_4 (0.0005%) in the control test. (General rule 9001).
7. Ammonium salt: Add 2 drops of sulfuric acid to 1 mL of test specimen, and evaporate to dryness in a boiler. Dissolve the residue in 45 mL of water, transfer it to a colorimetric tube, add 3 mL of sodium hydroxide (1 in 10) and 2 mL of alkaline mercury potassium iodide. If the yellow color is produced, it should not be darker than the control test added with 0.01 mg of NH_4 (0.001%) (Solution prepared by pure ammonium salt).

Assay: Accurately weigh about 1 mL of the test specimen in a tared volumetric flask, previously tared while containing about 5 mL of water, dilute with water to 100 mL, and mix. To 20.0 mL of the solution, add 20 mL of dilute sulfuric acid, and titrate with 0.1 N potassium permanganate. Each mL of 0.1 N potassium permanganate is equivalent to 1.701 mg of H_2O_2.

Hydrogen Peroxide Solution

Hydrogen Peroxide Solution contains 2.5~3.5 g of H_2O_2 in each 100 mL. It can be used as a suitable preservative, it contains not more than 0.05 %.

Characters:

1. General Characteristics: Clear, colorless liquid, acidic reaction with litmus paper, odorless or odor like ozone with slightly sour taste. Put on the sunlight, store for a long time, heat, contact with oxidizing and reducing agent, or continue stir will make the hydrogen peroxide deteriorate.
2. Specific gravity: The specific gravity is about 1.01 (General rule 1005).

Identification:

1. Shake 1 mL of test specimen which is added with 10 mL of water contained 1 drop of dilute sulfuric acid, and add 2 mL of ether, add a drop of potassium dichromate TS, produce a blue color in the water layer, and then the color is evanescent. Agitate and standing, the ether layer is blue.
2. To the test specimen, add sodium hydroxide solution, the solution becomes alkaline, decompose it to foam. A large quantity of oxygen is produced by heating.

Determination of impurity and other requirements:

1. Nonvolatile residue: To 20 mL of test specimen, place on a boiler, evaporate to dryness, and then dry the residue at 105℃ for 1 hour. The weight of the residue should not exceed 30 mg.
2. Acidity: To 1 mL of test specimen, add phenolphthalein TS as an indicator, and titrate with 0.1 N sodium hydroxide to neutral, not more than 2.5 mL of the alkali solution is used for neutralization.
3. Arsenic: To 1 mL of test specimen, add 1 mL of ammonium hydroxide TS, evaporate to dryness in a boiler, determine the residue by determination of arsenic (General rule 3006), the limit is 2 ppm.
4. Barium: To 10 mL of test specimen, add two drops of dilute sulfuric acid, no turbidity or precipitate is produced within 10 minutes.

5. Total heavy metal: Dilute 5 mL of test specimen with 20 mL of water, add 2 mL of ammonium hydroxide TS, and slowly boil the solution until the volume is reduced to about 5 mL. Add 3 mL of dilute acetic acid and dilute with water to 25 mL, determine it by determination of total heavy metal method Ⅰ (General rule 3005), the limit is 5 ppm.
6. Limit of preservative: To 100 mL of solution in a separator, respectively extraction with 50 mL, 25 mL and 25 mL of mixture solution of chloroform and ether (3:2). Combine the extracts at room temperature in a tared evaporating dish, evaporate spontaneously to dryness, and dry in a sulfuric acid desiccator for 2 hours. The residue weight should not exceed 50 mg.

Assay: Accurately pipette 2.0 mL of the test specimen into a suitable flask contained 20 mL of water. Add 20 mL of dilute sulfuric acid and titrate with 0.1 N potassium permanganate. Each mL of 0.1 N potassium permanganate is equivalent to 1.701 mg of H_2O_2.

Storage: Preserve in tight, light-resistant container, store in a dark and cool place.

Hydroxylamine Hydrochloride

$NH_2OH \cdot HCl$ molecular weight: 69.50

Hydroxylamine Hydrochloride contains not less than 96 % of of $NH_2OH \cdot HCl$ by weight.

Characteristics: White or colorless, crystalline powder, very soluble in water, soluble in ethanol.

Determination of impurity and other requirements:

1. Acidity: Dissolve 10.0 g of test specimen in 50 mL of water, add 3 drops of bromophenol blue, titrate with 0.5 N sodium hydroxide until the green color is produced, not more than 5 mL of alkali solution is used for neutralization.
2. Residue on ignition: To 2.0 g of test specimen, add 0.5 mL of sulfuric acid, ignite it to constant weight. The residue should not exceed 0.1 mg (0.05 %). Reserve the residue for later used.
3. Solubility in ethanol: To 1.0 g of test specimen, add 25 mL of ethanol, the solution which is well dissolved becomes clear and colorless. Reserve the solution for later used.
4. Sulfate: Place 1.0 g of test specimen in a beaker, dissolve it in 10 mL of water contained 10 mg of sodium carbonate, add 2 mL of nitric acid and 2 mL of 30% hydrogen peroxide. The beaker cover with a watch glass, heat it in a boiler until the reaction stop. Remove the watch glass, evaporate to dryness, and dissolve the residue in 10 mL of water. The SO_4 contained in the solution should not exceed 0.05 mg (General rule 9001) (0.005%).
5. Ammonium salt: To the remained solution of (3), add 1 mL of platinum chloride, the solution remain clear within 10 minutes.
6. Total heavy metal: The limit is 20 ppm (General rule 9001).
7. Iron: To the remain residue of (2), add 3 mL of dilute hydrochloric acid (1 in 2), the evaporating dish covers with a watch glass, heat it in a boiler for 15 ~ 20 minutes, remove the watch glass, evaporate to dryness, dissolve the residue in 2 mL of hydrochloric acid, dilute to 50 mL. The Fe contained in the solution should not exceed 0.01 mg (5 ppm) (General rule 9001).

Assay: Place 200 mg of the test specimen in a sulfuric acid desiccator, dried over night. To accurately weighed 100 mg of the test specimen, dissolve it in 20 mL of water, add the solution made of 5.0 g of ferrous ammonium sulfate and 20 mL of water, add 15 mL of dilute sulfuric acid, boil for 5 minutes. Dilute with 200 mL of water, titrate with 0.1 N potassium permanganate. Each mL of 0.1 N potassium permanganate is equivalent to 3.475 mg of $NH_2OH \cdot HCl$.

Isopropyl Alcohol

$(CH_3)_2CHOH$ molecular weight: 60.10

Characteristics: Colorless liquid, slightly odor, like ethanol, miscible with water, ethanol or most of organic solvent, the specific gravity is about 0.783 ~ 0.787.

Determination of impurity and other requirements:

1. Distilling range: To 100 mL of test specimen, determine it by determination of boiling point method II (General rule 1003), completely distill at 81 ~ 83℃.
2. Refractive index: 1.376~1.378 at 20℃ (General rule 1006).
3. Limit of nonvolatile residue: Evaporate 25 mL of the test specimen on a boiler to dryness, and dry at 105℃ for 1 hour: The weight of the residue should not exceed 1.0 mg (0.005%).
4. Dilute test: Dilute 10 mL of the test specimen with 40 mL of water, the solution should be clear, and the solution maintains clear within 1 hour.
5. Acidity: To 100 mL of boiled and cooled water, place in a glass- stopper flask, add 2 drops of phenolphthalein, and titrate with 0.02 N sodium hydroxide to pink color that persists for 30 seconds. Add 50 mL of the test specimen, mix well and titrate with 0.020 N sodium hydroxide to pink color that persists. Not more than 0.70 mL of sodium hydroxide is used for second titration.
6. Alkalinity: To 25 mL of boiled and cooled water. Add 6 mL of the test specimen and 2 drops of methyl red. If the yellow color appears in the solution, titrate with 0.020 N sulfuric acid to red color, the acid consumption is not more than 0.3 mL.

Lead Acetate

$Pb(CH_3COO)_2 \cdot 3H_2O$ molecular weight: 379.35

Characteristics: Colorless crystal, heavy white crystal or granular crystal, slightly acetic acid odor. Lose the water of crystallization when exposing in air, and absorbing carbon dioxide cause incompletely dissolve in water. Dissolve 1.0 g of the test specimen in 1.6 mL of water, or in 30 mL of ethanol, aqueous solutions has the alkaline reaction with litmus paper.

Determination of impurity and other requirements:

1. Insoluble matter: Dissolve 10.0 g of the test specimen in 100 mL of boiled and cooled water which is added 2 drops of glacial acetic acid, shake. If there has insoluble matter, filter with a tared filter crucible, the residue wash thoroughly by boiled and cooled water, dry at 105℃ for 2 hours and weigh, the quantity of the residue should not exceed 1.0 mg (0.01 %).
2. Chloride: To 2.0 g of the test specimen, determine it by the limit of chloride (General rule 9001), the quantity of Cl should not exceed 0.01 mg (0.0005%).
3. Nitrate: Dissolve 1.0 g of the test specimen in 10 mL of water, add 5 mg of sodium chloride, 0.2 mL of indigo carmine TS and add 10 mL of sulfuric acid, stirring thoroughly, stand for 10 minutes. The blue color clarified liquid in the upper layer should not disappear completely.
4. Copper: Dissolve 5.0 g of test specimen in a mixture of 42 mL of water and 3 mL of glacial acetic acid, add 5 mL of sulfuric acid, and stand for 10 minutes and filter. To 25 mL of the filtrate, add 50 mg of alum and a little of ammonium persulfate, neutralize the solution with ammonia solution, and then add few more drops of ammonia solution, boil, allow to cool and filter, retain the residue for later used. Add glacial acetic acid in the filtrate, the solution is neutral by the test with phenolphthalein, add 0.25 mL more of acetic acid, then add 0.25 mL of new made potassium ferricyanide, if the pink color is produced, it should not be darker than the control solution (prepared by 0.5 mg of cupric sulfate) added with 0.125 mg of Cu.
5. Iron: To the residue of the (4), rinse with water to remove acetate, dissolve in 10 mL of dilute hydrochloric acid by heating, rinsing the filter with water. Dilute the filtrate with water to 45 mL, add 50 mg of ammonium persulfate and 3 mL of ammonium thiocyanate solution, if the red color is produced, it should not be darker than the control solution added with 0.025 mg of Fe (General rule 9001).
6. No precipitate of hydrogen sulfide: To 20 mL of the filtrate (4), dilute with water to 100 mL, add hydrogen sulfide, all precipitates of lead are produced, and then filter it. To 50 mL of the filtrate, place in a boiler, evaporate to dryness, and slowly ignited to constant volume, the residue should not exceed 0.5 mg (0.05 %).

Methyl Alcohol

CH_3OH molecular weight: 32.04

Methyl Alcohol contains not less than 99.5 % (v/v) of CH_3OH.

Characteristics: Colorless, clear liquid, odor, flammable, miscible with water, ethanol and ether.

Determination of impurity and other requirements:

1. Distilling range: To 100 mL of test specimen, determine it by determination of boiling point method Ⅱ (General rule 1003), only 1℃ difference between 20 drops of distillate production to 95 mL of distillate production, the boiling point at 760 mm of Hg is 64.6℃.
2. Dilute test: Mix 15 mL of the test specimen with 45 mL of water, stand for 1 hour, the solution should be clear.
3. Nonvolatile residue: Evaporate 125 mL of test specimen in a boiler to dryness, and dry at 105℃ for 30 minutes, the weight of the residue should not exceed 1.0 mg (0.001 %).
4. Acidity: To 10 mL of test specimen, mix 25 mL of water, add 0.5 mL of phenolphthalein TS, and titrate with 0.02 N sodium hydroxide, until the color is slightly pink, persist after shaking for 30 seconds. Add 25 mL of the test specimen, after mixing well, titrate with 0.02 N sodium hydroxide until a slightly pink color appear, not more than 0.5 mL of alkali solution is used to produce a pink color in second titration.
5. Alkalinity: Dilute 25 mL of the test specimen with 25 mL of water, add 1 drop of methyl red, and titrate with 0.02 N sulfuric acid until the pink color appear, not more than 0.20 mL of acid solution is used to produce a pink color.
6. Acetone and aldehydes: To 1 mL of the test specimen, add 4 mL of water and 5 mL of alkaline mercuric-potassium iodide. If the turbidity is produced, the concentration of the test specimen should not be higher than the mixture of 5 mL water contained 0.03 mg of acetone and 5 mL of alkaline mercuric-potassium iodide.
7. Readily oxidizable substances: To 20 mL of test specimen, cool to 15℃, add 0.1 mL of 0.1 N potassium permanganate, stand for 5 minutes at 15 ℃, the pink color does not completely disappear.
8. Readily carbonizable substances: Cool 10 mL of sulfuric acid in a small conical flask to 10℃, add 10 mL of test specimen, shake constantly, the color of the solution should not be darker than slightly brown.

Assay: The specific gravity is not more than 0.790.

α-Naphthol

$C_{10}H_7OH$ molecular weight: 144.17

Characteristics: Colorless, or slightly pink crystal or crystalline powder, odor, insoluble in water, soluble in ethanol, benzene, or ether. The melting temperature is 95 ~ 97℃.

Determination of impurity and other requirements:

1. Acidity: To 1.0 g of the test specimen, add 50 mL of water, shake for 10 minutes and filter, the filtrate is neutral in the reaction with the litmus papers.
2. Residue on ignition: The residue should not exceed 0.05 % (General rule 9001).

β-Naphthol

$C_{10}H_7OH$ molecular weight: 144.17

Characteristics: White lobular or crystalline powder, slightly odor, the color is changed when exposed to light, slightly soluble in water, soluble in ethanol, ether, chloroform, or alkali metal hydroxide. The melting range is 121 ~ 123℃.

Determination of impurity and other requirements:

1. Solubility in ethanol: To 1.0 g of test specimen, add 10 mL of ethanol, mix well, dissolve completely into a colorless solution.
2. Residue on ignition: after ignition, the residue should not exceed 0.05 % (General rule 9001).
3. Acidity: To 1.0 g of test specimen, add 50 mL of water, and shake for 15 minutes constantly and filter. The filtrate should be neutral to the litmus papers.
4. α-Naphthol: To 100 mg of test specimen, add 10 mL of water, boil it until dissolve completely. Allow to cool and filter, add 0.3 mL of 1 N sodium hydroxide and 0.3 mL of 0.1 N iodine solution to the filtrate, the violet color should not be produced.
5. Ammonia insoluble substance: To 500 mg of test specimen, add 30 mL of ammonia solution, shake to dissolve completely, the color of the solution should not be darker than slightly yellow.

Nitric Acid

HNO_3 molecular weight: 63.02

Nitric Acid contained is between 68.0 %~71.0 % of HNO_3 by weight.

Characteristics: Colorless, clear liquid, the specific gravity is about 1.4.

Determination of impurity and other requirements:

1. Appearance: Shake the test specimen in its original container, and transfer it to 10 mL test tube. Compare with the similar test tube contained water, the test specimen is equally clear and free form suspended matter, when viewed with transmitted light, it exhibits no apparent difference in color.
2. Residue on ignition: Place 140 mL of test specimen in a platinum kettle, and evaporate to dryness. Ignite it to cherry red, cool for 5 minutes, and weigh, the weight of the residue should not exceed 1.0 mg (0.0005 %).
3. Chloride: To 5 mL of test specimen, dilute with equivalent volume of water, add 1 mL of silver nitrate TS. If the solution is turbidity, it should not be more concentrated than mixture of 0.005 mg of Cl in 9 mL of water, 1 mL of dilute nitric acid (1 volume nitric acid and 9 volume water) and 1 mL of silver nitrate TS.
4. Sulfate: Add about 10 mg of anhydrous sodium carbonate to 28 mL of nitric acid. Evaporate to dryness in a boiler, dissolve the residue in 25 mL of water, the SO_4 in the solution should not exceed 0.04 mg (0.0001 %) (General rule 9001).
5. Arsenic: To 215 mL of test specimen, add 5 mL of sulfuric acid and mix well. Evaporate until the white fumes of concentrated sulfur trioxide release. Cool and dilute with 10 mL of water, and evaporate until the release of sulfur trioxide white fume, repeat the procedure as described until all nitrate had been removed, follow the Determination of Arsenic (General rule 3006), the arsenic content should not exceed 0.003 mg (0.000001%).
6. Total heavy metal: Place 14 mL (20.0 g) of the test specimen in a boiler, evaporate to dryness. Add 2 mL of dilute acetic acid to the residue, heat it warm, dilute with water to 40 mL. Add 10 mL of hydrogen sulfide, if the color is produced, it should not be darker than control solution added with 0.02 mg of Pb (General rule 9001).
7. Iron: Evaporate 7 mL (10.0 g) of the test specimen to dryness in a boiler, the limit of Fe in the residue is 0.01 mg (1ppm) (General rule 9001).

Assay: Weigh accurately about 2 mL of nitric acid in a tared, glass-stopper conical flask, and dilute with 25 mL of water. Add methyl red as the indicator, and titrate with 1 N sodium hydroxide. Each mL of 1 N sodium hydroxide is equivalent to 63.02 mg of HNO_3.

Petroleum Benzin

Alias: Petroleum Ether

Petroleum Benzin is a mixture of hydrocarbons from petroleum, most of them are alkane, it is produced from the fractional distillation of petroleum at 35 ~ 80℃.

NOTE: Freely flammable, when its vapor is mixed with air, contact with fire occur violent explosion.

Characteristics:

1. General Characteristics: Colorless, clear, no fluorescence, volatile liquid. Odor like ether or slightly like petroleum. It is very flammable, when its vapor mix with air, contact with fire occurs violent explosion. It is neutral in the reaction with the wet litmus paper.
2. Solubility: It is practically insoluble in water, freely soluble in anhydrous alcohol, miscible with ether, chloroform, benzene, fat oil (except castor oil), or volatile oil.
3. Specific gravity: The specific gravity is 0.634 ~ 0.660 (General rule 1005).

Determination of impurity and other requirements:

1. Distilling range: Determine it by determination of boiling point method Ⅱ(General rule 1003), it is totally distilled at 35 ~ 80℃.
2. Residue on evaporation: Evaporate 50 mL of test specimen on the tared evaporating dish to dryness at below 40℃, and dry the residue at 105℃ 1 hour and weigh. The mass of residue should not exceed 1 mg.
3. Fatty oil and sulfur compounds: To 10 mL of test specimen, drop on wet odorless filter paper (place on a previously warmed glass plate), let it evaporate spontaneously until left a little bit of solution, no foreign odor or sulfur compounds odor produce. After evaporate completely, no oil spot left.
4. Sulfur compounds and reducing substances: To 10 mL of test specimen, add 2.5 mL of ammonia-ethanol and several drops of silver nitrate, boil for several minutes, no brown color produce.
5. Benzene: Place 40 drops of sulfuric acid and 10 drops of nitric acid in a tube, add 5 drops of test specimen, heat to warm for about 10 minutes, stand for 30 minutes, transfer the mixture to a shallow dish, and dilute with water. No odor of nitrobenzene is perceptible.

Phosphomolybdic Acid

$12MoO_3 \cdot H_3PO_4$ molecular weight: 3939.77

Characteristics: Bright yellow crystal or crystalline powder, freely soluble in water.

Determination of impurity and other requirements:

1. Insoluble matter: To 5 g of the test specimen, not more than 1 mg of insoluble matter (0.02 %) (General rule 9001).
2. Chlorides: Dissolve 1.0 g of the test specimen in 50 mL of water, add 1 mL of nitric acid and filter. The filtrate is divided into two equal parts. One part is added 0.5 mL of silver nitrate, stand for 10 minutes, and filter repeatedly until the solution is clear. Add standard chloride solution which volume equals to 1 mg of chloride (General rule 9001) to the filtrate. Prepare another filtrate as control, add 0.5 mL of silver nitrate. If the turbidity is produced, the concentration of test solution should not be higher than control solution (0.02 %).
3. Nitrate: Dissolve 200 mg of the test specimen in 10 mL of water, add 0.1 mL of indigo carmine TS, add 10 mL of sulfuric acid, the blue color should not disappear within 5 minutes.
4. Sulfate: Dissolve 200 mg of the test specimen in 20 mL of water, add 0.5 mL of dilute hydrochloric acid and 2 mL of barium chloride, the turbidity is not produced within 1 minute.
5. Ammonium salt: Dissolve 500 mg of the test specimen in 5 mL of water, add 10 mL of sodium hydroxide (1 in 10), heat in a boiler, no odor of ammonia is perceptible.
6. Calcium: Dissolve 500 mg of the test specimen in 10 mL of hot water, alkalized by adding ammonia solution, add 1 mL of ammonium oxalate, the turbidity is not produced within 10 seconds.

Phosphoric Acid

H_3PO_4 molecular weight: 98.00

Phosphoric Acid contains more than 85.0 % of H_3PO_4 by weight.

Characteristics: Colorless, odorless, syrupy-liked liquid, miscible with water or ethanol.

Determination of impurity and other requirements:

1. Chlorides: Not more than 0.025 mg (0.0005%) of Cl in 3 mL (5.0g) of phosphoric acid (General rule 9001).
2. Nitrate: Dilute 2 mL of the test specimen with water to 10 mL, add 5 mg of sodium chloride, 0.1 mL of indigo carmine TS solution, and 10 mL of sulfuric acid, the blue color does not totally disappear within 5 minutes (about 0.001 % of NO_3).
3. Sulfate: Dilute 12 mL (20.0 g) of the test specimen with 190 mL of water. Boil, add 10 mL of barium chloride, stand overnight, if the precipitate is produced, filter and wash the residue, and ignite the residue to constant mass. The quantity of the residue should not exceed 1.5 mg of the control solution.
4. Reducing substance: Dilute 10 mL of the test specimen with 5 mL of water, add 0.2 mL of 0.1 N potassium permanganate, heat until boiling, place it in a boiler for 10 minutes, the pink color is produced, and the color does not disappear completely.
5. Volatile acid: Dilute 25 mL of the test specimen with 75 mL of boiled and cooled water, heat and distill, collect 50 mL of distillate, add 3 drops of phenolphthalein and titrate with 1 N sodium hydroxide until the pink color is produced, not more than 0.1 mL of alkali solution is used for neutralization.

6. Alkali metals and other phosphates: Dilute 1.8 mL (3.0 g) of the test specimen with 100 mL of water, add the solution which is added 15.0 g of lead acetate in 25 mL of water, stir constantly, dilute it with water to 200 mL, filter. Take 100 mL of filtrate add hydrogen sulfide until the precipitate of lead is totally produced. Filter, the residue is washed with 20 mL of water, the filtrate add 2 drops of sulfuric acid, evaporate to dryness, ignite slowly and weigh. The residue should not exceed 3.0 mg of the reference test (0.2 %).
7. Total heavy metal: Dilute 1.5 mL of the test specimen with 10 mL of water, add 3 drops of phenolphthalein as indicator, neutralize with ammonia solution, add 25 mL of 1 N sulfuric acid, dilute with water to 45 mL, add 5 mL of hydrogen sulfide. If the brown color is produced, it is not deeper than the control solution added with 0.025 mg of Pb (10 ppm) (General rule 9001).
8. Iron: Dilute about 20 mL of the test specimen with water to 50 mL. To 10 mL of this solution, dilute it to 40 mL with water, add 4 mL of concentrated ammonia solution and 5 mL of hydrogen sulfide. If the green color is produced, it is not deeper than the control solution added with 2.5 mL of dilute phosphoric acid and 0.025 mg of Fe (50 ppm) (General rule 9001).

Assay: Weigh accurately about 1 g of phosphoric acid in a tared, glass-stopper flask, and dilute it with water to about 100 mL. Add 0.5 mL of thymolphthalein TS, and titrate with 1 N sodium hydroxide. Each mL of 1 N sodium hydroxide is equivalent to 49.00 mg of H_3PO_4.

Phosphorus Pentaoxide

P_2O_5 molecular weight: 141.95

Phosphorus pentaoxide contains not less than 98 % of P_2O_5 by weight.

Characteristics: White amorphous powder, freely deliquescence, soluble in water and turn to phosphoric acid, also soluble in ethanol.

Determination of impurity and other requirements:

1. Insoluble matter: Dissolve 5.0 g of the test specimen in 40 mL of water, if necessary, warm it to promote dissolve. If it has insoluble residue, filter it by filtered crucible (retain the filtrate for later used). Rinse the residue with water, dry it at 105℃ for 2 hours and weigh, the residue does not exceed 1.0 mg (0.02 %).
2. Diphosphorous trioxide: To the filtrate above, dilute with water to 100 mL. To 60 mL of the dilute solution, add 0.2 mL of 0.1 N potassium permanganate, heat until boiling, and place in a boiler for 10 minutes. The pink color does not disappear completely. Retain the filtrate for later used.
3. Ammonium salt: Dilute 10 mL of the dilute solution obtained above with water to 40 mL, add 10 mL of sodium hydroxide (1 in 10) and 2 mL of alkali mercuric potassium iodide. If a color is produced, it should not be darker than the control solution added with 0.5 mg of NH_3 (standard solution made by NH_4Cl).
4. Arsenic: The limit of arsenic in 1 mL of dilute solution (2) is 60 ppm (General rule 3006).
5. Total heavy metal: Dilute 10 mL of the dilute solution (2) with water to 30 mL, boil for 5 minutes, add 1 mL of ammonia TS and dilute it to 50 mL. To 10 mL of the dilute solution, add 0.025 mg of Pb (General rule 9001), dilute it to 40 mL as solution A. Dilute 30 mL of other solution with water to 40 mL as solution B. To A and B solution, each add 10 mL of hydrogen sulfide, the color of solution B should not be darker than the color of the solution A.

Potassium Biphosphate

KH_2PO_4 molecular weight: 136.09

Characteristics: Colorless or white crystal, soluble in water, insoluble in ethanol.

Determination of impurity and other requirements:

1. Insoluble matters and precipitates of calcium and ammonia: Dissolve 10.0 g of the test specimen in 100 mL of water, add 5 mL of ammonium oxalate and 15 mL of ammonia solution, stand overnight. If the precipitate is produced, filter and rinse the residue, ignite it and weigh, the weight of the residue should not exceed 1.0 mg (0.01 %).
2. Loss on drying: Weigh accurately 2 g of test specimen, dry for 24 hours in a sulfuric acid desiccator, the losing weight should not exceed 0.2 %. Retain the dry product for later use.
3. Residue on ignition: To the dry product above, ignite carefully to its constant weight, the losing weight is about 13.15% ~13.35 %.
4. pH value: Make the test specimen into 0.2 M solution, determine it by determination of pH (General rule 1009), the pH value is about 4.2~4.5. To four tube A, B, C, D each add 10 mL of the test solution as described above, add 5 drops of 0.04 % bromophenol blue to A, B, add 5 drops of 0.02 % methyl red to C and D. Add 0.05 mL of 0.1 N hydrochloric acid to A, add 0.05 mL of 0.1 N sodium hydroxide to C. The color of A changes more obvious than the color of B. The color of C changes more obvious than the color of D.
5. Chloride: The content of Cl in 2.0 g of test specimen should not exceed 0.02 mg (0.001 %) (General rule 9001).
6. Nitrogen compounds: Place 2.0 g of the test specimen in a Kieldahl flask, dissolve it in 40 mL of water, cool the flask in ice, add 15 mL of sodium hydroxide (1 in 10) and 500 mg of small pieces of thin aluminum, stopper tightly stand for

1 hour. Slowly distill it, add the distillate to 5 mL of water contained 2 drops of dilute hydrochloric acid. Collect 35 mL of distillate, dilute it with water to 50 mL, add 2 mL of sodium hydroxide (1 in 10) and 2 mL of alkali mercuric potassium iodide. The color should not be darker than the control solution added with 0.02 mg of N (standard solution prepared by NH_4Cl).

7. Sulfate: Dissolve 10.0 g of the test specimen in 100 mL of water, add 1 mL of hydrochloric acid and boil, add 5 mL of barium chloride. Stand for overnight, the precipitate is not produced.
8. Total heavy metal: Dissolve 2.5 g of the test specimen in 20 mL of water, add 2 drops of phenolphthalein as an indicator, neutralized it with ammonia solution, and then add 20 mL of 1 N sulfuric acid and 5 mL of hydrogen sulfide, dilute to 50 mL with water. If the brown color is produced, it is not deeper than the control solution added with 0.025 mg of Pb (General rule 9001).
9. Iron: Dissolve 2.75 g of the test specimen in 50 mL of water, dilute 10 mL of the solution with water to 40 mL, and add 2 mL of concentrated ammonia solution and 5 mL of hydrogen sulfide. If the color is produced, it should not be darker than the control solution added with 1 mL of the test solution and 0.010 mg of Fe (General rule 9001).
10. Sodium: Dipped the test specimen solution with platinum wire (1 in 10), ignite it in a colorless flame, the yellow color is not produced.

Potassium Chloride

KCl molecular weight: 74.56

Characteristics: Colorless crystals or white granular powder, odorless, freely soluble in water, slightly soluble in ethanol.

Determination of impurity and other requirements:

1. Insoluble matter: Not more than 0.5 mg (0.005%) (General rule 9001) of insoluble matter in 10.0 g of the test specimen. Retain the filtrate for later use.
2. Acidity and alkalinity: Dissolve 5.0 g of the test specimen in 50 mL of freshly boiled and cooled water, and add 3 drops of phenolphthalein TS. No pink color is produced. Then add 0.2 mL of 0.02 N sodium hydroxide, and the solution should turn pink.
3. Chlorate and Nitrate: Dissolve 2.0 g of the test specimen in 10 mL of water, add 0.1 mL of indigo carmine TS and 10 mL of sulfuric acid, the blue color does not disappear within 10 minutes.
4. Nitrogen compounds: To 1.0 g of test specimen, determine it by impurities of anhydrous potassium carbonate (4), the weight of nitrogen compounds should not exceed 0.01 mg (0.001 %) (General rule 9001).
5. Phosphate: The content of PO_4 in 2.0 g of the test specimen should not exceed 0.02 mg (0.001 %) (General rule 9001).
6. Sulfate: The content of SO_4 in 2.0 g of the test specimen should not exceed 0.1 mg (0.005%) (General rule 9001).
7. Barium: Dissolve 4.0 g of the test specimen in 20 mL of water, filter, if necessary, the filtrate is divided into two equal parts. Add 2 mL of dilute sulfuric acid to one part, the other one is added 2 mL of water, stand for 2 hours, the clarity of two liquid is equal.
8. Calcium, magnesium or ammonia precipitates: To the retained filtrate (1), add 5 mL of ammonium oxalate, 2 mL of ammonium phosphate and 25 mL of ammonia solution, stand overnight. Filter, rinse the residue with 2.5 % ammonia solution, then ignite and weigh it, the weight of the residue should not exceed 0.5 mg (0.005 %).
9. Total heavy metal: Limit of total heavy metals is 5 ppm (General rule 9001).
10. Iron: The content of Fe in 3.0 g of the test specimen should not exceed 0.01 mg (3 ppm) (General rule 9001).
11. Sodium: Dipped the solution with platinum wire (1in10), ignite it in a colorless flame, and the yellow color is not produced.

Potassium Ferricyanide

$K_3Fe(CN)_6$ molecular weight: 329.26

Characteristics: Dark red crystals, freely soluble in water.

Determination of impurity and other requirements:

1. Insoluble matter: Dissolve 10.0 g of the test specimen in 50 mL of cold water, the weight of insoluble matter should not exceed 1.0 mg (0.01 %) (General rule 9001).
2. Chloride: Dissolve 2.0 g of the test specimen in 175 mL of water, add a solution which is made with 2.5 g of the crystalline copper sulfate without chloride in 25 mL of water, mix well, and stand for 15 minutes. To 10 mL of the clear solution on upper layer, add 10 mL of water, 2 mL of nitric acid, and 1 mL of silver nitrate. If the turbidity is produced, the concentration should not be higher than 0.01 mg of Cl in control test (General rule 9001).
3. Sulfate: Dissolve 5.0 g of the test specimen in 100 mL of water, shake and filter. Add 5 drops of glacial acetic acid and 5 mL of barium chloride to the filtrate, the turbidity should not produce within 10 minutes.
4. Ferrous compounds: To 400 mL of water, add 10 mL of 25 % sulfuric acid, mix well, and add 0.1 N potassium permanganate until the pink color remain 1 minute. Dissolve 4.0 g of the test specimen in the solution as described above, add 0.10 mL of 0.1 N potassium permanganate, the

solution is still pink.

Potassium Ferrocyanide

$K_4Fe(CN)_6 \cdot 3H_2O$ molecular weight: 422.41

Characteristics: Yellow transparent crystal, freely soluble in water, insoluble in ethanol.

Determination of impurity and other requirements:

1. Insoluble matter: Dissolve 10.0 g of the test specimen in cold water and shake, the weight of the insoluble mater should not exceed 1.0 mg (0.01 %) (General rule 9001).
2. Chloride: Determine it by ferricyanide impurities (General rule 9001), the content of Cl should not exceed 0.01 %.
3. Sulfate: Determine it by ferricyanide impurities (General rule 9001), it should meet the requirements.

Potassium Hydroxide

KOH molecular weight: 56.11

Potassium hydroxide contains not less than 85 % of KOH, not more than 3 % of K_2CO_3.

Characteristics: White fused lump, small pellets, flakes, sticks, and other forms. It rapidly absorbs carbon dioxide and moisture in air, and then deliquesced.

Determination of impurity and other requirements:

1. Chlorides: Dissolve 50.0 g of the test specimen in boiled and cooled water, cool and dilute it to 500 mL, the content of Cl should not exceed 0.1 mg (0.01 %). (General rule 9001) Retain the solution for later use.
2. Nitrogen compounds: Place 20 mL of the retained solution above in a distillation flask, dilute it with water which does not have nitrogen to 50 mL, then connect the condenser, the outlet of the condenser is immersed under the surface of 10 mL of water contained 2 drops of dilute hydrichloric acid. To other distillation flask, add 50 mL of water contained no ammonia. 10 mL of the test solution is equal to 0.01 mg of ammonium salt, each add 500 mg of small piece of thin aluminum wire, stand for 1 hour, distill, and filter it. Collect 35 mL of the filtrate separately, each add 2 mL of freshly boiled sodium hydroxide (1 in 10), dilute to 50 mL with water, add 2 mL of alkali mercuric potassium iodide. The color of the test solution is not deeper than the color of the control solution.
3. Phosphate: To 20 mL of retain solution (1) add 5 mL of hydrochloric acid, evaporate to dryness in a boiler, the PO_4 in the residue should not exceed 0.02 mg (0.001 %) (General rule 9001).
4. Sulfate: To 20 mL of retain solution (1), add 5 mL of hydrochloric acid, evaporate to dryness in a boiler, add 1 mL of 1 N hydrochloric acid to the residue, dilute it with water to 25 mL, filter it if necessary, add 2 mL of barium chloride in the filtrate. If the turbidity is produced, the concentration of the test specimen should not be higher than control solution contained 0.10 mg of SO_4 (General rule 9001).
5. Precipitate of ammonia solution: Dissolve 10.0 g of the test specimen in 100 mL of water. Take 12 mL of sulfuric acid add in 12 mL of water carefully, cool, add the sulfuric acid solution in the test solution , evaporat to produce the dense smoke of SO_3. Cool, dissolve the residue in 130 mL of hot water, add 2 drops of methyl red, and then add ammonia solution until the color of the solution is yellow, heat until boiling. If the precipitate is produced, filter, the residue rinse with hot water, ignite it and weigh, the weight of the residue should not exceed 0.02 %.
6. Total heavy metal: To 50 mL of retaining solution from (1), add 10 mL of nitric acid as solution A. To other 10 mL of retaining solution from (1), add 12 mg of Ag (the standard solution made by $AgNO_3$), add 10 mL of nitric acid carefully as solution B. Evaporated two solutions A and B to dryness with a small flame, the residue rinse with 20 mL of water, each add 1 drop of phenolphthalein, and neutralized with 0.1 N sodium hydroxide, each add 1 mL of 1 N acetic acid, and dilute it to 40 mL, then add 10 mL of hydrogen sulfide, the color of A shold not be darker than the color of B.
7. Iron: To 5 mL of retaining solution from (1), add phenolphthalein solution as an indicator, neutralized with hydrochloric acid, add 2 mL more of hydrochloric acid, then dilute it with water to 50 mL as solution A. Take a quantity which same as 0.01mg Fe of standard iron salt solution (General rule 9001), add a quantity which same as for netutralizing of hydrochloric acid, evaporate to dryness in a boiler, add 2 mL of hydrochloric acid in the residue, dilute it with water to 50 mL as solution B. Add 50 mg of ammonium persulfate and 3 mL of ammonium thiocyanate in the solutions A and B, if the red color in A is produced, the color should not be darker than the color of B.

Assay: To 25~30 g of potassium hydroxide, weigh accurately, dissolve in boiled and cooled water to 500 mL, mix well. Dilute 25 mL of the solution with boiled and cooled water to 200 mL, add 5 mL of barium chloride, shake and stand for several minutes, add phenolphthalein as an indicator, titrate with 1 N hydrochloric acid, and then add 2~3 drops of methyl orange, continue titrating to red color. In the endpoint of phenolphthalein, each mL of 1 N hydrochloric acid is equivalent to 56.10 mg of KOH. In the endpoint of methyl orange, each mL of 1 N hydrochloric acid is equivalent to 69.10 mg of K_2CO_3

Potassium Iodide

KI molecular weight: 166.01

Potassium Iodide contains 99.0 %~101.5 % of KI, calculated on the dry basis.

Characteristics:

1. General characteristic: Colorless translucent, white hexagonal crystal or white powder. Odorless; taste salty and bitter. Remain constant in exposure to dry air, deliquescence in the humid air. The solution is neutral or alkaline to litmus paper.
2. Solubility: Freely soluble in water, especially in hot water, soluble in glycerol and ethanol.

Identification: the solution of the test specimen meets the requirements of the tests for potassium and iodide (General rule 2001).

Determination of impurity and other requirements:

1. Loss on drying: Dry the test specimen at 105℃ for 4 hours, the lost should not exceed 1 % of its weight. (General rule 3001)
2. Alkalinity: Dissolve 1.0 g of the test specimen in 10 mL of freshly boiled and cooled water, and add 0.1 mL of 0.1 N sulfuric acid and 1 drop of phenolphthalein, the slightly red color is not produced.
3. Iodate: Dissolve 1.1 g of the test specimen in sufficient boiled and cooled water without ammonia and carbon dioxide to 10 mL, and transfer to a colorimetric tube. Add 1 mL of starch TS and 0.25 mL of 1 N sulfuric acid, mix, and compare the color with an equivalent volume control solution contained 100 mg of potassium iodide, 1 mL of standard iodate solution (prepare by diluting 1 mL of potassium iodate solution (1 in 2500) with water to 100 mL), 1 mL of starch TS, and 0.25 mL of 1 N sulfuric acid. Color produced in the test solution should not be darker than the control solution (4 ppm).
4. Limit of nitrate, nitrite, and ammonium: Add 1.0 g of test specimen in a 40-mL test tube, dissolved with 5 mL of water, add 5 mL of sodium hydroxide and about 200 mg of aluminum wire. Insert a pledget in the upper portion of the test tube, and place a piece of moistened red litmus paper on the mouth of the tube. Heat the test tube in a boiler for 15 minutes, no blue color is on the paper.
5. Arsenic: Determine by determination of arsenic, the limit of arsenic is 2 ppm. (General rule 3006)
6. Thiosulfate and barium: Dissolve 500 mg of the test specimen in 10 mL boiled and cooled water without ammonia and carbon dioxide, and add 2 drops of dilute sulfuric acid, no turbidity produce within 1 minute.
7. Total heavy metal: Dissolve 2.0 g of test specimen in 20 mL of water, add 2 mL of dilute acetic acid and dilute with water to 25 mL. Determine it by limit test of total heavy metals method I (General rule 3005), the limit is 10 ppm.

Assay: Take about 500 mg of potassium iodide, weigh accurately, dissolve in about 10 mL of water, and add 35 mL of hydrochloric acid and 5 mL of chloroform. Titrate with 0.05 M potassium iodate until the purple color of iodate vanishes in the chloroform layer, and shake well after adding each drop. Stand for 5 minutes, if the purple color is reproduced, titrate with potassium iodate as described above. Each mL of 0.05 M potassium iodate is equivalent to 16.60 mg of KI.

Potassium Permanganate

$KMnO_4$ molecular weight: 158.04

Potassium Permanganate contains 99.0 %~100.5 % of $KMnO_4$, calculated on the dry basis.

NOTE: Handle carefully, potassium permanganate may cause explosions if it is contacted with organic or other readily oxidizable substances, either in solution or the dry state.

Characteristics:

1. Gerneral Characteristics: Dark purple crystals with a metallic luster. Odorless, slightly sweet, astringent taste. No change as exposed to air.
2. Solubility: Soluble in water ; freely soluble in boiling water.

Identification:

1. As solution, dark purplish-red when concentrated and pink when highly diluted, add sulfuric acid, and then add the reducing reagent, the color is dissapear.
2. A solution of potassium permanganate shows the specific reaction of potassium salt and permanganate (General rule 2001).

Determination of impurity and other requirements:
Dry it in silica gel drying container for 18 hours, the lost weight is not more than 0.5%.

Assay: To 125 mg of test specimen, weigh accurately, dissolve in 25 mL of water, add a mixture of 2 mL of sulfuric acid and 5 mL of water, mix, accurately added 50 mL of 0.1 N oxalic acid, heat to 80℃, titrate with 0.1 N potassium permanganate. Each mL of 0.1 N oxalic acid is equivalent to 3.161 mg of $KMnO_4$.

Silver Nitrate

$AgNO_3$ molecular weight: 169.87

Silver Nitrate, powdered, and then dried in the silica gel desiccator in dark for 4 hours, contains 99.8%~100.5% of $AgNO_3$.

Characteristics :

1. Gerneral Characteristics: White or colorless crystal, turn grey or grey black gradully when exposed to light and store with organic substances.
2. Solubility: Freely soluble in water, more freely soluble in boiling water, sparingly soluble in ethanol, freely soluble in boiling ethanol ; slightly soluble in ether.

Identification:

1. Solution of test specimen (1 in 50) has the reaction to the tests for silver salt (General rule 2001).
2. To 5 mL of silver nitrate solution (1 in 10) in a test tube, add 1 drop of diphenylamine, mix, carefully add sulfuric acid along the tube wall to make the solution two layers, a deep blue color appears at the surface between two solutions.

Determination of impurity and other requirements:

1. Clarity, color and pH of solution: Dissolve 2.0 g of test specimen in 20 mL of water, the solution is clear and colorless, with pH value 5.5 (General rule 1009).
2. Copper salt: To 5 mL of silver nitrate solution (1 in 10), slowly drop ammonia solution until the precipitate formed at first is dissolved, and the blue color should not appear in the solution.

Assay: Powder about 1.0 g of silver nitrate, and dry in the silica gel desiccator in dark for 4 hours. Weigh accurately about 700 mg of the dried salt, dissolve in 50 mL of water, add 2 mL of nitric acid and 2 mL of ferric ammonium sulfate, and titrate with 0.1 N ammonium thiocyanate. Each mL of 0.1 N ammonium thiocyanate is equivalent to 16.99 mg of $AgNO_3$.

Sodium Bicarbonate

$NaHCO_3$ molecular weight: 84.01

Sodium bicarbonate contains 99.0%~100.5% of $NaHCO_3$, calculated on the dry basis.

Characteristics:

1. Gerneral Characteristics: White crystalline powder, odorless, saline taste. Unchanged in dry air, slowly decompose in moist air. Fresly prepared solution without shaking is alkaline to litums paper, the alkalinity will increase after shaking, heating and long standing.
2. Solubility: Soluble in water, insoluble in ethanol.

Identification: Solution of sodium bicarbonate meets the requirements of the tests for sodium and for bicarbonate (General rule 2001).

Determination of impurity and other requirements:

1. Insoluble matter: Dissolve 1.0 g of test specimen in 20 mL of water, it should dissolve completely as a clear solution.
2. Carbonate: Add 1.0 g of test specimen in 20 mL of freshly boiled and cooled water without shaking under 15℃, dissolve. Add 2 mL more of 0.1 N hydrochloric acid and 2 drops of phenolphthalein, the pink color should not appear immediately.
3. Ammonium salt: Place 1.0 g of test specimen in a tube and heat, the odor of ammonia should not be produced.
4. Loss on drying: Dry 4.0 g of accurately weighed test specimen, dry in silica gel desiccator for 4 hours, and the lost weight should not exceed 0.25% (General rule 3001).
5. Arsenic: Dissolve 1.0 g of test specimen in 20 mL of dilute sulfuric acid (1 in 5), add 35 mL of water, determine it by the test of arsenic (General rule 3006), the procedure of adding 20 mL of dilute sulfuric acid (1 in 5) can be omitted. The limit is 2 ppm.
6. Total heavy metal: Mix 2.0 g of test specimen with 5 mL of water and 9.5 mL of dilute hydrochloric acid, boil for 1 minute. Add 1 drop of phenolphthalein, then drop sufficient ammonium hydroxide till the solution has a faint pink color. Cool, add 2 mL of dilute acetic acid and dilute with water to 25 mL. Determine it by limit tests for total heavy metals I (General rule 3005), the limit is 5 ppm.
7. Chloride: To 0.35 g of test specimen, determine it by limit test for chlorides (General rule 3003). If the turbidity is produced, the concentration should not be higher than control solution which has 1.48 mL of 0.0010 N hydrochloric acid (150 ppm).
8. Sulfate: To 1.0 g of test specimen, determine it by limit test for sulfates (General rule 3003). If the turbidity is produced, the concentration should not be higher than the control solution which has 0.15 mL of 0.02 N sulfuric acid (150 ppm).

Assay: Weigh accurately about 3 g of sodium bicarbonate, add 25 mL of water, add methyl orange as an indicator, titrates with 1 N sulfuric acid. Each mL of 1 N sulfuric acid is equivalent to 84.01 mg of $NaHCO_3$.

Sodium Bisulfite

$NaHSO_3$ molecular weight: 104.07

This specimen is a mixture of sodium bisulfite and sodium pyrosulfite. It produces 58.5%~67.4% of sulfur dioxide.

Characteristics:

1. Gerneral Characteristics: Sodium bisulfite is white or yellow-white crystals, granular powder, with the odor of sulfur dioxide. It is slowly metamorphism in air.
2. Solubility: Freely soluble in water, slightly soluble in ethanol.

Identification: Solution of sodium bisulfite meets with the specify reactions of the tests for sodium and sulfite (General rule 2001).

Determination of impurity and other requirements:

1. Arsenic: Place 500 mg of test specimen, in a 150-mL beaker, and add 2 mL of nitric acid, evaporated to dryness in a boiler. Dissolve the residue in 20 mL of dilute sulfuric acid (1 in 5), transfer to arsenic generating bottle, dilute it with water to 55 mL, determine it by determination of arsenic, the limit of arsenic is 3 ppm.
2. Total heavy metal: Dissolve 1.0 g of test specimen in 10 mL of water, add 5 mL of hydrochloric acid, and evaporate on a boiler to dryness. Dissolve the residue in 20 mL of water, add 2 more drops of phenolphthalein and an appropriate amount of 1 N sodium hydroxide until the pink color is produced. Add 2 mL of dilute acetic acid and water to make 25 mL, determine it by determination of total heavy metals (General rule 3005), the limit of total heavy metals is 20 ppm.
3. Iron: To 500 mg of test specimen, add 2 mL of hydrochloric acid, evaporate to dryness in a boiler. Dissolve the residue in 2 mL of hydrochloric acid and 20 mL of water, add several drops of bromine solution, remove bromine by boiling, cool, dilute with water to 25 mL, and add 50 mg of ammonium persulfate and 5 mL of ammonium thiocyanate. If the red color is produced, the color should not be darker than the color of the control solution of iron standard solution added with 0.025 mg of Fe (50 ppm).(General rule 2001)
4. Lead: Dissolve 1.0 g of test specimen in 10 mL of water, add 5 mL of hydrochloric acid, evaporated to dryness in a boiler, dissolve the residue in 20 mL of water, determine it by determination of lead (General rule 3007), the limit of lead is 10 ppm.

Assay: Place 200 mg of accurately weighed sodium bisulfate in a glass-stopper bottle, accurately add 50.0 mL of 0.1 N iodine solution, stopper, stand for 5 minutes. Add 1 mL of hydrochloric acid, add starch TS as an indicator, titrate the excess iodine with 0.1 N sodium thiosulfate. Each mL of 0.1 N iodine is equivalent to 3.203 mg of SO_2.

Sodium Borohydride

$NaBH_4$ molecular weight: 37.83

Characters: White crystalline lump. Very freely soluble in water, soluble (react) in methanol, it decomposes quickly by boiling.

Assay:

Potassium iodate solution (0.25 N) : Dissolve 8.917 g of accurately weighed potassium iodate which is dried at 110℃ to constant weight in 1000 mL of water.

Procedure: Dissolve accurately weighed 500 mg of sodium borohydride in 125 mL of sodium hydroxide (1 in 5) in a 250-mL volumetric flask, and add water to its volume, mix well. To 10 mL of the solution, transfer it to a 250-mL iodine bottle, add 35.0 mL of potassium iodate solution, and mix well. Add 2.0 g of potassium iodide and add 10 mL of dilute sulfuric acid (1 in 10), stopper, and stand 3 minutes in the dark. Add 3 mL of starch TS, titrate with 0.1 N sodium thiosulfate to end point. Correct it by a blank test. Calculate the content of $NaBH_4$ (mg) as formula below, the content should not lower than 98 %.

$\{〔(35.0)(0.25)〕-0.1\,V\}\,4.729$

V: mL of 0.1 N sodium thiosulfate.

Sodium Carbonate

$Na_2CO_3 \cdot H_2O$ molecular weight: 124.01

It contains 99.5 %~100.5 % of Na_2CO_3, calculated on the dry basis.

Characteristics:

1. Gerneral Characteristics: Colorless crystals or white crystalline powder. Odorless, with no change in the air. It removes crystal water in dried air above 50℃, and becomes anhydrous above 100℃.
2. Solubility: Freely soluble in water, more freely soluble in boiling water.

Identification:

1. The solution (1 in 10) is strong alkaline reaction with phenolphthalein solution.
2. The solution (1 in 10) meets to the tests for sodium and carbonate (General rule 2001).

Determination of impurity and other requirements:

1. Water: Dry about 2.0 g of test specimen at 105℃ for 1 hour, the loss weight is about 12%~15%. (General rule 3010)
2. Arsenic: Dissolve 500 mg of test specimen in 20 mL of dilute sulfuric acid (1 in 5), add 35 mL of water, determine it by determination of arsenic (General rule 3006), the step of adding 20 mL of dilute sulfuric acid (1 in 5) can be omitted, the limit of arsenic is 3 ppm.
3. Total heavy metal: Dissolve 1.0 g of test specimen in 10 mL of water, add 7.5 mL of dilute hydrochloric acid, boil, add 1 drop of phenolphthalein, and drop sodium hydroxide until the solution is faint pink. Cool, add 2 mL of dilute acetic acid and water to 25 mL, then determine it by determination of total heavy metals method Ⅰ (General rule 3005), the limit of total heavy metals is 10 ppm.

Assay: Weigh accurately 2 g of the test specimen, place it in a flask, dissolve in 50 mL of water, add methyl

orange as an indicator, titrates with 1 N sulfuric acid. Each mL of 1 N sulfuric acid is equivalent to 52.99 mg of Na_2CO_3.

Sodium Hydroxide

NaOH molecular weight: 40.00

Sodium hydroxide contains not less than 97 %, of NaOH, including not more than 2.5 % of Na_2CO_3.

Characteristics: White fused lumps, small pellets, sticks, or other forms. It easily absorbs carbon dioxide and water in air.

Determination of impurity and other requirements:

1. Test solution: Dissolve 50.0 g ± 0.1 g of test specimen in freshly boiled and cooled water, cool, dilute it to 500 mL.
2. Chloride: The content of Cl in 10 mL of test specimen should not exceed 0.05 mg (0.005 %). (General rule 9001)
3. Nitrogen compounds: Place 20 mL of the test solution in a distillation flask, add 50 mL of water contained no ammonia, determine it by anhydrous sodium sulfate (5) (General rule 9001) the color should not be darker than 10 mL of test solution added with 0.01 mg of N (the solution made by NH_4Cl).
4. Phosphate: To 20 mL of the test solution add 5 mL of hydrochloric acid, and evaporate to dryness in a boiler. The PO_4 in residue should not exceed 0.02 mg (0.001 %). (General rule 9001)
5. Sulfate: To 20 mL of the test solution, add 5 mL of hydrochloric acid, evaporate to dryness in a boiler, dissolve the residue in 1 mL of 1 N hydrochloric acid, add an appropriate amount of water to 25 mL, and filter if necessary. Add 2 mL of barium chloride to the filtrate. If the turbidity is produced, it should not be darker than the control solution added 0.1 mg of SO_4. (General rule 9001)
6. Ammonia precipitate: Dissolve 10.0 g of test specimen in 100 mL of water, add a mixture of 12 mL of sulfuric acid and 12 mL of water, and evaporate it until the fume of SO_3 is produced. Cool, dissolve the residue in 130 mL of hot water, add 2 drops of methyl red, and drop ammonia solution until the yellow color is produced. Boil, filter the insoluble substance if present, rinse the filtered residue with hot water completely, ignite and weigh, the weight of the residue should not exceed 2 mg (0.02 %).
7. Total heavy metal: To 50 mL of the test solution, add 10 mL of nitric acid carefully, evaporate to dryness on a small flame. Dissolve the residue in 20 mL of water, add 1 drop of phenolphthalein, neutralize with 0.1 N sodium hydroxide, add 1 mL more of 1 N acetic acid, dilute it to 40 mL with water, and add 10 mL of hydrogen sulfide. The color should not be darker than the color of control solution added with 10 mL of the test solution and 0.12 mg of Ag (the standard solution made by $AgNO_3$).
8. Iron: To 5 mL of the test solution, add phenolphthalein solution as an indicator, neutralize with hydrochloric acid, add 2 mL more of hydrochloric acid, and dilute it to 50 mL(S). To other solution which is equivalent to 0.01mg of Fe (General rule 9001), add same volume of hydrochloric acid which is used for neutralizing the test specimen. Evaporate to dryness in a boiler, transfer the residue by 2 mL of hydrochloric acid, and dilute it to 50 mL (C). To each S and C add 50 mg of ammonium persulfate and 3 mL of ammonium thiocyanate. If the color is produced in S, it should not be darker than the color of C.

Assay: Dissolve about 25.0~30.0 g of accurately weighed sodium hydroxide, dissolve it in freshly boiled and cooled water to 1000 mL. To 50 mL of this solution, dilute it with freshly boiled and cooled water to 200 mL, add 5 mL of barium chloride, stopper, and stand for 5 minutes. Add phenolphthalein as an indicator, and titrate with 1 N hydrochloric acid until the pink color disappears, add 2~3 drop of methyl orange as an indicator, and continue the titration until a persistent pink color is produced. Each mL of 1 N hydrochloric acid is equivalent to 40.00 mg of NaOH in the first titration, and each mL of acid consumed is equivalent to 53.00 mg of Na_2CO_3 in the second titration.

Sodium Lauryl Sulfate

Alias: Sodium Dodecyl Sulfate

Sodium lauryl sulfate is a mixture of sodium alkyl sulfates consisting mainly of sodium lauryl sulfate $CH_3(CH_2)_{10}CH_2OSO_3Na$. The combined content of sodium chloride and sodium sulfate should not exceed 8 %.

Characteristics:

1. Gerneral Characteristics: White or slightly yellow crystals, it has slightly odor.
2. Solubility: Freely soluble in water, the solution has an opalescent.

Identification:

1. Solution of test specimen (1 in 10) meets with the tests for sodium (General rule 2001).
2. Solution of test specimen (1 in 10) is added with hydrochloric acid to acidity, boil for 20 minutes, meets with the tests for sulfate (General rule 2001).
3. To 200 mg of the residue obtained in total alcohol content, add 4 mL of solution made with 100 mg of bromine in 100 ml of carbon tetrachloride, vortex shaking, add 300 mg of *N*-bromosuccinimide, and heat in a boiler at 80℃ for 5 minutes, a red color is produced.

Impurities and other requirement:

1. Alkalinity: Dissolve 1.0 g of test specimen in 100 mL of water, add phenol red, and titrate with 0.1 N hydrochloric acid, not more than 0.6 mL of acid is used for neutralization.
2. Arsenic: Determine the test specimen by determination of arsenic (General rule 3006), the limit of arsenic is 3 ppm.
3. Total heavy metal: Dissolve 500 mg of test specimen in 24 mL of water, and add 1 mL of dilute acetic acid. Determine it by determination of total heavy metals method Ⅰ (General rule 3005), the limit of total heavy metals is 20 ppm.
4. Sodium chloride: To 5.0 g of accurately weighed test specimen, dissolve in 50 mL of water, add dilute nitric acid (1 in 20), the solution should be neutral to litmus paper. Add 2 mL of potassium chromate, and titrate with 0.1 N silver nitrate. Each mL of 0.1 N silver nitrate is equivalent to 5.844 mg of sodium chloride.
5. Sodium sulfate: Place accurately weighed 1.0 g of test specimen in a 400-mL beaker, add 10 mL of water, heat and stir until it dissolves completely. Add 100 mL of ethanol in this hot solution, stopper, and heat at a temperature just below the boiling point for 2 hours. Filter through a Gooch crucible while hot, and wash the residue with 100 mL of boiled ethanol. Dissolve the residue by washing with 150 mL of water, and collect the solution in a beaker. Add 10 mL of hydrochloric acid, heat to boil, add 25 mL of barium chloride TS, and stand overnight. Filter the barium sulfate by a tared filter crucible, and wash the residue until there is no chloride ion left, dry the precipitate, ignite and weigh. The quantity of barium chloride multiply 0.6086 is equivalent to the quantity of Na_2SO_4.
6. Unsulfated alcohol: Dissolve about 10.0 g of accurately weighed test specimen in 100 mL of water, and add 100 mL of alcohol. Transfer the solution to a separator, and extract with 50-mL of hexane three times. If an emulsion forms, add sodium chloride to promote separation. Combine the hexane extract, and wash with 50-mL of water three times, and dehydrate with anhydrous sodium sulfate. Filter the hexane extract into a tared beaker, evaporate on a boiler until the odor of hexane no longer is perceptible, dry the residue at 105℃ for 30 minutes, cool and weigh. The weight of the residue should not exceed 4.0% of the weight of the sodium lauryl sulfate.
7. Total alcohol: Transfer about 5.0 g of accurately weighed of the test specimen to an 800-mL Kjeldahl flask, and add 150 mL of water, 50 mL of hydrochloric acid, and a few zeolites. Attach a reflux condenser to the Kjeldahl flask, heat carefully to avoid excessive frothing, and then boil for about 4 hours. Cool, rinse the condenser with ether, collect the solution in the flask, and transfer the solution to a 500-mL separator, rinsing the Kjeldahl flask twice with ether and adding the ether washings to the separator. Extract the solution with 75-mL of ether two times, combine ether extracts in a tared beaker, evaporate the extracts on a boiler, dry the residue at 105℃ for 30 minutes, cool, and weigh. The residue represents the total quantity of alcohols, and not less than 59.0% of the weight of sodium lauryl sulfate.

Sodium Nitrite

$NaNO_2$ molecular weight: 69.00

Sodium Nitrite contains more than 97.0 % of $NaNO_2$, calculated on the dry basis.

Characteristics:

1. Gerneral Characteristics: White or faint yellow granular powder, or white lumps or rods. Odorless, taste salty. It deliquescences in air. The solution has alkali reaction with litmus papers.
2. Solubility: Dissolve 1.0 g of test specimen in 1.5 mL of water, sparingly soluble in ethanol.

Identification: Solution of the test specimen meets with the tests for sodium and nitrite (General rule2001).

Determination of impurity and other requirements:

1. Loss on drying: Dry the test specimen for 4 hours in a sulfuric acid desiccator, loss not more than 1 % of its weight (General rule 3001).
2. Arsenic: Determine the test specimen by determination of arsenic (General rule 3006), the limit of arsenic is 5 ppm.
3. Total heavy metal: Dissolve 1.0 g of test specimen in 6 mL of dilute hydrochloric acid, and evaporate on a boiler to dryness. Crush the residue to a coarse powder, and continue heating on the boiler until the odor of hydrochloric acid is no longer perceptible. Dissolve the residue in 23 mL of water, and add 2 mL of dilute acetic acid, determine it by determination of total heavy metals method I (General rule 3005), the limit of total heavy metals is 20 ppm.

Assay: Dry the test specimen for 4 hours in a sulfuric acid desiccator, weigh accurately 1 g, place it in a 100-mL volumetric flask, add an appropriate amount of water and make to 100 mL. Accurately take 10 mL of the solution, add into a mixture of 50.0 mL of 0.1 N potassium permanganate, 100 mL of water, and 5 mL of sulfuric acid. When adding the sodium nitrite solution, immerse the tip of the pipette beneath the surface of the permanganate mixture. Heat the liquid to 40℃, stand for 5 minutes, and add 25.0 mL of 0.1 N oxalic acid. Heat the mixture to about 80℃, and titrate with 0.1 N potassium permanganate. Each mL of 0.1 N potassium permanganate is equivalent to 3.450 mg of $NaNO_2$.

Dibasic Sodium Phosphate

$Na_2HPO_4 \cdot 7H_2O$ molecular weight: 268.08

Dibasic sodium phosphate contains 98.0 %~100.5 % of Na_2HPO_4, calculated on the dry basis.

Characteristics:

1. Gerneral Characteristics: Colorless or white granule. Odorless, taste salty. It loses the hydration water in warm, dry air. It has alkali reaction to phenolphthalein solution. The pH value of 0.1 M solution is 9.5.
2. Solubility: Freely soluble ina water, very slightly soluble in ethanol.

Identification: Solution of test specimen (1 in 20) meets with the tests for sodium and phosphate. (General rule 2001)

Determination of impurity and other requirements:

1. Loss on drying: Dried the test specimen for 12 hours at 105℃, the loss weight is 43 %~50 %. (General rule 3001)
2. Insoluble matter: Dissolve 10.0 g of Na_2HPO_4 in 100 mL of hot water, filter through a tared filter crucible, wash the residue with hot water, and dry at 105℃ for 2 hours, the weight of the residue obtained should not exceed 20 mg.
3. Chloride: Determine 1.0 g of Na_2HPO_4 by limit test for chlorides (General rule 3003). If the turbidity is produced, the concentration should not be higher than control solution which has 0.4 mL of 0.02 N hydrochloric acid (280 ppm).
4. Sulfate: Determine 200 mg of Na_2HPO_4 by limit test for sulfates (General rule 3003). If the turbidity is produced, the concentration should not be higher than control solution which has 0.2 mL of 0.02 N sulfuric acid (1000 ppm).
5. Arsenic: Dissolve 1.25 g Na_2HPO_4 in water, determine it by determination of arsenic (General rule 3006), the limit of arsenic is 8 ppm.
6. Total heavy metal: Dissolve 2.0 g of Na_2HPO_4 in 10 mL of water, add 4 mL of dilute acetic acid and water to 25 mL, determine it by determination of total heavy metals method Ⅰ (General rule 3005), the limit of total heavy metals is 10 ppm.

Assay: To 6.5 g of the test specimen which had heated 105℃ for two hours, weigh accurately, place it in a 250 mL beaker, add 50.0 mL of 1 N hydrochloric acid and 50 mL of water, stir until dissolved, titrate with 1 N sodium hydroxide by the potentiometric titration to about pH 4, record the buret reading. Calculate the volume A which the test specimen used to titrate 1 N hydrochloric acid. Continue the titration with 1 N sodium hydroxide to the inflection point at about pH 8.8, record the buret reading, and calculate the volume of 1 N sodium hydroxide required in the titration between the two inflection points (pH 4 to pH 8.8). When A is equal to or less than B, each mL of the volume A of 1 N hydrochloric acid is equivalent to 142.0 mg of Na_2HPO_4. When A is greater than B, each mL of the volume 2B minus A of 1 N sodium hydroxide is equivalent to 142.0 mg of Na_2HPO_4.

Sodium Sulfate, Anhydrous

Na_2SO_4 molecular weight: 142.05

Characteristics: White powder, odorless, it absorbs moisture in air, approach to 12%, soluble in 6 times of water, insoluble in ethanol or other organic solvent.

Determination of impurity and other requirements:

1. Insoluble matter: Not more than 1.0 mg (0.01 %).
2. Residue on ignition: To 2 g of the test specimen, weigh accurately, place in a dish, ignite it in a small flame, the losing weight should not exceed 10 mg (0.5 %).
3. Acidity or alkalinity: Dissolve 5.0 g in 50 mL of freshly boiled and cooled water, add 3 drops of phenolphthalein, the pink color is not produced. Titrate with 0.1 N sodium hydroxide until the pink color is produced, the consumption of the alkali solution should not exceed 0.05 mL.
4. Chloride: Not more than 0.03 mg of Cl in 1 g of the test specimen (0.003 %). (General rule 9001)
5. Nitrogen compound: Determine by the determination of the nitrogen compound in potassium sulfate (General rule 9001). The color of the test specimen should not be darker than the color of the control solution added with 0.01 mg of N (the standard solution made by the NH_4Cl).
6. Arsenic: The limit of arsenic in 1 g of the test specimen is 4 ppm. (General rule 3006)
7. Calcium, magnesium and ammonia precipitate: Dissolve 5.0 g of the test specimen in 75 mL of water, add 5 mL of ammonium oxalate, 2 mL of ammonium phosphate and 10 mL of ammonia solution, stand overnight. If the precipitate is produced, filter, rinse with ammonia solution (2.5 %), ignite it to constant weight, the residue should not exceed 1.5 mg (0.03 %).
8. Total heavy metal: The limit of total heavy metals in the test specimen is 5 ppm. (General rule 9001)
9. Iron: 1.0 g of the test specimen should not contain more than 0.01 mg of Fe (General rule 9001).

Sodium Thiosulfate

$Na_2S_2O_3 \cdot 5H_2O$ molecular weight: 248.19

Characteristics: Colorless crystal, white crystalline powder or granule. Dissolve 1.0 g in 0.5 mL water, insoluble in ethanol.

Determination of impurity and other requirements:

1. Insoluble matter: Not more than 1.0 mg of insoluble matter in 20.0 g of $Na_2S_2O_3$ (0.005%) (General rule 9001).

2. Acidity or alkalinity: Take 5.0 g of the test specimen, dissolve in 50 mL of freshly boiled and cooled water, and add 3 drops of phenolphthalein, there is no pink color in the solution. Add 0.05 mL of 0.1 N sodium hydroxide and the solution should be pink.
3. Sulfate and sulfite: Dissolve 1.0 g of the test specimen in 50 mL of water, add an appropriate amount of 0.1 N iodine solution until the slightly yellow is produced, dilute it to 100 mL, and mix well. To 10 mL of the solution add 0.5 mL of 1 N hydrochloric acid and 2 mL of barium chloride. If the turbidity is produced, the concentration should not be higher than the control solution added 0.1 mg of SO_4 (General rule 9001).
4. Sulfide: Dissolve 1.0 g of the test specimen in 10 mL of water, add 0.5 mL of alkaline lead acetate (prepare by adding an appropriate amount of sodium hydroxide (1 in 10) into lead acetate solution (1 in 10) until the precipitate which forms at first is completely dissolved), the dark color should not be produced within 1 minute.

Sulfuric Acid

H_2SO_4 molecular weight: 98.08

Sulfuric Acid contains 95%~ 98% of H_2SO_4 by weight.

Characteristics: Colorless and odorless oily liquid.

Determination of impurity and other requirements:

1. Color: Shake the test specimen in the container. Place 10 mL of the test specimen in a 150 mm × 20 mm tube, compare with the other tube added with water, both liquids are clear and with no suspended matter. Compare the colors of two liquids under transmitted light, it should be no difference, carefully dilute the test solution to 2 N for comparison and it should be clear.
2. Residue on ignition: Place 55 mL of the test specimen in a platinum dish, evaporate to dryness, ignite for 5 minutes, cool and weigh, the weight of the residue should not exceed 0.5 mg (0.0005 %). Retain the residue for later use.
3. Chloride: Dilute 5 mL of test specimen carefully with water to 50 mL, cool, add 1 mL of dilute nitric acid and 1 mL of silver nitrate. If the turbidity is produced, the concentration should not be higher than the control solution added 0.005 mg of Cl (General rule 9001).
4. Nitrate: To 10 mL of test specimen, add to 5 mL of water containing 0.1 mL of indigo carmine TS solution, the blue color is not vanish within 5 minutes.
5. Ammonium salt: Place 1.6 mL (about 3.0 g) of the test specimen in a flask contained 30 mL of cold water, cool in ice, carefully add 20 mL of sodium hydroxide (1 in 10), keep at low temperature, cool in ice again, add 20 mL of sodium hydroxide. Connect the flask to the condenser, and immerse the outlet of the condenser in 10 mL of water contained 2 drops of dilute hydrochloric acid, heat and distill. Collect 35 mL of distillate, add 2 mL of sodium hydroxide (1 in 10), dilute it to 50 mL, add 2 mL of alkali mercuric potassium iodide, the color should not be darker than the control solution added with 0.01 mg of NH_3 (prepared with NH_4Cl).
6. Arsenic: To 55 mL of test specimen, add 3 mL of nitric acid, concentrate to 10 mL, cool. Carefully dilute with 20 mL of water, and concentrate to about 5 mL, cool, carefully dilute the residue with 20 mL of water. The limit of arsenic is 0.04 ppm (General rule 3006).
7. Total heavy metal: To 11 mL (20.0 g) of the test specimen, gradually add in a small quantity of water contained 10 mg of sodium carbonate, heat to dryness by a small flame, add 1 mL of nitric acid, evaporate to dryness in a boiler. Dissolve the residue in 20 mL of water, add phenolphthalein solution as an indicator, and neutralized with 0.1 N sodium hydroxide. Add 1 mL of dilute acetic acid, dilute to 40 mL. To other 0.02 mg of Pb (General rule 9001), add 1 mL of dilute acetic acid, dilute to 40 mL as a control solution. Add 10 mL of hydrogen sulfide in each of the test solution and the control solution, the color of test solution should not be darker than control solution (1 ppm).
8. Iron: To the residue of (2), add 2 mL of hydrochloric acid, cover with a watch glass, heat for 15 to 20 minutes in a boiler, then remove the watch glass and evaporate to dryness. Dissolve the residue in 20 mL of hydrochloric acid, dilute it to 100 mL, the limit of Fe should not exceed 0.02 mg (1 ppm) in 20 mL of the solution. (General rule 9001)
9. Readily oxidizable substance: To 20 mL of test specimen, carefully add in 60 mL of water, cool to 25 ℃, add 0.05 mL of 0.1 N potassium permanganate, the pink color is produced, the color should not vanish within 5 minutes (0.0005 % of SO_2).

Assay: Place about 1 mL of sulfuric acid in an accurately weighed glass-stopper flask. Dilute with 25 mL of water, cool, add methyl red as an indicator, and titrate with 1 N sodium hydroxide. Each mL of 1 N sodium hydroxide is equivalent to 49.04 mg of H_2SO_4.

Tetrahydrofuran

C_4H_8O molecular weight: 72.21

1. General Charateristics: Colorless liquid, with a special stimulative odor, miscible with water and organic solvent. When mix with water, it release small amount of heat and reduce volume slightly, when mix with chloroform a mass quantity of heat is produced. Adding some suitable preservatives reduces the production of peroxides, the quantity of

the preservatives should not exceed 0.1%, and label the concentration and name. Store in a small air-tight container, avoid light.
2. Specific gravity: The specific gravity is 0.884 ~ 0.886 (General rule 1005).
3. Boiling point: The boiling point is 65 ~ 66℃.
4. Acidity: Mix 5.00 mL of test specimen with 10 mL of water, add 1 drop of methyl red, if the pink color is produced, titrate with 0.02 N sodium hydroxide, not more than 0.25 mL of alkali solution is used.

Determination of impurity and other requirements:
1. Water: Determine by the Karl Fischer's method (General rule 3010), water content is not more than 0.1 %.
2. Residue on evaporation: Evaporate 10 mL (12.0 g) of the test specimen to dryness in a boiler, dry at 105℃ for 1 hour and weigh. The residue with preservative should not exceed 2 mg, without preservative should not exceed 1 mg.

Toluene

$C_6H_5CH_3$ molecular weight: 92.14

Characteristics: Colorless and flammable liquid, strong refractivity, insoluble in water, miscible with ethanol, chloroform, carbon disulfide, petroleum benzine, the specific gravity is about 0.865.

Determination of impurity and other requirements:
1. Distillation range: To 100 mL of test specimen, distill it by determination of boiling point method Ⅱ (General rule 1003), the distillate should be 95 % or above at 110~111℃.
2. Residue on evaporation: Place 115 mL of the test specimen in a boiler, evaporate to dryness, dry at 120℃ for 30 minutes, the weight of the residue should not exceed 1.0 mg (0.001 %).
3. Sulfide: Determine it by test of benzene (General rule 9001), the weight of the residue should not exceed 1.2 mg (0.003 % of S).
4. Readily carbonizable substance: To 15 mL of test specimen, add 50 mL of sulfuric acid, shake for 15 to 20 seconds, stand for 15 minutes, the layer of the test specimen is colorless, the color of sulfuric acid should not be darker than the color of a mixture with colorimetric standard solution and water (1:2). Each 1000 mL of colorimetric standard solution contains 5.0 g of $CoCl_2 \cdot 6H_2O$, 40.0 g of $FeCl_3 \cdot 6H_2O$ and 20 mL of hydrochloric acid.
5. Water: Place a small quantity of test specimen (NOTE: Avoid absorb any moisture in the air) in a dried tube, stopper. Cool in ice, and the turbidity should not be produced after 3 minutes.

Triketohydrindene Hydrate (Ninhydrin)

$C_9H_4O_3 \cdot H_2O$ molecular weight: 178.15

Characteristics: White or brown-white crystals or crystalline powder, the powder is soluble in water or ethanol, slightly soluble in ether and chloroform. Heat it to 100℃, it changes to red.

Determination of impurity and other requirements:
1. Melting point: The melting point is 240~245℃, the crystal structure decomposes immediately, before measuring, the heat-transfer fluid should heat to 220℃ (General rule1002).
2. Residue on ignition: Ignite 100 mg of the test specimen, no residue should be retained.
3. Sensitivity: Dissolve 10 mg of glycine in 25 mL of water, take 1 mL of the solution, add to a mixture solution of sodium acetate 50 mg and water 2 mL, then add 0.2 mL of a mixture of water 1 mL and test specimen 5 mg, boil for 1~2 minutes, violet color is produced, stand for several minutes and the color becomes deeper.

Vanillin

$C_8H_8O_3$ molecular weight: 152.15

Vanillin contains 97.0%~103.0% of $C_8H_8O_3$, calculate on the dry basis.

Characteristics:
1. General Characteristics: White and slightly yellow needle-like crystals or crystalline powder. Odor like vanillin. Deteriorated under light, the solution is acid to litmus papers.
2. Solubility: Slightly soluble in water; freely soluble in ethanol, chloroform, ether, and alkali metal hydroxides; soluble in glycerol and hot water.
3. Melting point: The melting point is 81~83℃. (General rule 1002)

Identification:
1. Determined the test specimen and standard solution by determination of spectrophotometry potassium bromide pallet method (General rule 1008)(NOTE: dry at silica gel desiccator for 4 hours before carry out the determination), both solutions should obtain the greatest absorption at the same wavelength by the same method.
2. Prepare vanillin methanol solution (1 in 125,000) as the test solution. Determine both standard and test solution by the determination of ultraviolet spectrophotometry (General rule 1008). For the test and standard solution, they respectively show the highest and the lowest absorption at the same wavelength.

Determination of impurity and other requirements:
1. Loss on drying: Dry the test specimen in silica gel desiccator for 4 hours, the weight loss is not more

than 1%.(General rule 3001)

2. Residue on ignition: After igniting, the residue is not more than 0.05%. (General rule 3002)

Assay:

1. Standard Solution: Dissolve an accurately weighed quantity of standard vanillin in methanol, and dilute with methanol to obtain a standard solution with the concentration of about 8 μg per mL.
2. Test solution: Place about 100 mg of accurately weighed vanillin to a 250-mL volumetric flask, add methanol to volume, and mix. Pipette 2.0 mL of this solution into a 100-mL volumetric flask, add methanol to volume, and mix.
3. Assay: Put both test and standard solutions in 1-cm cells. Determine the absorbance with a suitable spectrophotometer at the wavelength near 308 nm where has maximum absorbance, use methanol as the blank, test and get the absorbance. Calaulate the quantity of $C_8H_8O_3$ in mg, in the test specimen, taken by the formula:

$$12.5C\ (A_U / A_S)$$

C: is the concentration, in μg per mL, of vanillin in the standard solution.
A_U: the absorbance of the solution of test solution.
A_S: the absorbance of the solution of standard solution.

Aluminum Chloride

$AlC1_3$ molecular weight: 133.34

White or slightly yellow crystals or a crystalline powder; odor likes hydrochloric acid, fuming in air; the sample is exothermal greatly or even explosion in contact with water, hygroscopic, corrosive. Soluble in water or ether.

Aluminum Nitrate

$Al(NO_3)_3 \cdot 9H_2O$ molecular weight: 375.13

White crystals, hygroscopic, induce combustion and explosion when heat with organic substances. Freely soluble in water and ethanol; very slightly soluble in acetone; insoluble in ethyl acetate or pyridine.

Ammonium Reineckate

$NH_4Cr(NH_3)_2(SCN)_4 \cdot H_2O$ molecular weight: 354.45

Red or dark red crystals; dissociate in water with formation of hydrogen cyanide which brings blue color. Soluble in hot water and ethanol; slightly soluble in water.

Citric Acid

$C_6H_8O_7 \cdot H_2O$ molecular weight: 210.14

White crystal or granule, easily lose the hydration water, hygroscopic. Freely soluble in water or ethanol.

Cupric Chloride

$CuCl_2 \cdot 2H_2O$ molecular weight: 170.48

Slightly blue-green crystal. Soluble in water, ethanol and methanol; slightly soluble in acetone or ethyl acetate.

3, 5-Dinitrobenzoic Acid

$C_7H_4N_2O_6$ molecular weight: 212.12

White or slightly yellow crystal, volatilize with water vapor. Freely soluble in ethanol and glacial acetic acid, slightly soluble in water, ether, benzene and carbon disulfide.

Ethyl Formate

$HCOOC_2H_5$ molecular weight: 74.08

Low viscosity, flammable liquid; stimulate skin and mucous; anesthetic in high concentration. Miscible with ether and ethanol, soluble in 10 times of water and gradually decomposes into formic acid and ethanol.

Ferric Chloride

$FeCl_3 \cdot 6H_2O$ molecular weight: 270.30

Brown-yellow or orange-yellow crystalline lumps, freely hygroscopic. Freely soluble in water, ethanol, acetone, ether or glycerol.

Methyl Ethyl Ketone

$CH_3COC_2H_5$ molecular weight: 72.11

Colorless liquid, freely soluble in water and ethanol.

Perchloric Acid

$HClO_4$ molecular weight: 100.46

Colorless clear liquid, strong oxidant, very hygroscopic, corrosive and volatile. Miscible with water.

Phenol

C_6H_5OH molecular weight: 94.11

Colorless or slightly red needle crystals or a crystalline lump; special odor; corrode to skin and mucous; gradually darken under light and on air; hygroscopic. Freely soluble in ethanol, choroform, ether, glycerol, fatty oil, and volatile oil, soluble in water.

Trinitrophenol

$C_6H_3N_3O_7$ molecular weight: 229.11

Slightly yellow crystal; odorless; with a bitter taste. When the dry test specimen encounters strong heat, hit or friction, it will violently explode. Soluble in hot water, ethanol or benzene.

(9002) Test Solutions (TS)

For the preparation of test solutions, use reagents of the quality described under Reagents (General rule 9001). The symbol "*" in superscript form is used to provide a notice that the test solution also being used as an indicator solution.

Aluminium Trichloride TS (Aluminum chloride TS)

Dissolve 1.0 g of aluminium trichloride in alcohol to make 100 mL.

Ammonia TS

To 400.0 mL of concentrated ammonium solution add water to make 1000 mL. It contains between 9.5% and 10.5% of NH_3.

Ammonia TS, Stronger (Concentrated ammonium solution)

Dissolve ammonia prepared by heating a mixture of calcium hydroxide and ammonium chloride or by Haber Process in water. It contains between 27.0% and 30.0% of NH_3.

NOTE: Use care in handling concentrated ammonium solution because of the caustic nature of the solution and the irritating properties of its vapor. Do not taste it, and avoid inhalation of its vapor. Cool the container well before opening, and cover the closure with a cloth or similar material while opening.

Description:

1. General description: Clear, colorless solution with characteristic ammonia odor. Upon exposure to air it loses ammonia rapidly. It is strongly basic.
2. Specific Gravity: 0.90 (General rule 1005).

Identification:

Dense white fumes are produced when holding a glass rod moistened with hydrochloric acid near the surface of the sample solution.

Impurities and other requirements:

Dilute 1 volume of the sample solution with 1.5 volume of water, perform the following tests using this solution as the test solution, and their compliance should meet the requirements.

1. Nonvolatile residue: Evaporate 10.0 mL of the sample solution in a tared platinum or porcelain dish to dryness, and dry the residue at 105℃ for 1 hour. The mass of the residue is not more than 2.0 mg.
2. Heavy metals: Evaporate 5.0 mL of the sample solution to dryness on a water bath, add 1.0 mL of dilute hydrochloric acid to the residue, and evaporate to dryness. Dissolve the residue in 2.0 mL of dilute acetic acid, add water to make 25 mL, and perform the test of method I of determination of total heavy metals in general rule 9001 by using this solution as the test solution. The heavy metals limit is 5.0 ppm.
3. Readily oxidizable substances: To 10.0 mL of the sample solution add a slightly excess of dilute sulfuric acid, and add 0.10 mL of 0.1 N potassium permanganate. The red color of the potassium permanganate does not disappear within 10 minutes.

Assay:

Weigh accurately a glass-stoppered flask containing about 15 mL of water, and transfer about 2 mL of the sample solution into the flask. Insert the stopper, mix, and again weigh to obtain the weight of the specimen. Adding methyl red TS as the indicator, titrate with 1 N sulfuric acid. Each mL of 1 N sulfuric acid is equivalent to 17.03 mg of NH_3.

Ammonium Molybdate TS

Dissolve 6.5 g of finely powdered molybdic acid in a mixture of 14 mL of water and 14.5 mL of concentrated ammonium solution. Cool the solution, and add slowly, with stirring, to a well-cooled mixture of 32 mL of nitric acid and 40 mL of water. Allow to stand for 48 hours, and filter through asbestos.

This solution deteriorates upon standing and is unsuitable for use if, upon the addition of 2 mL of dibasic sodium phosphate TS to 5 mL of the solution, an abundant yellow precipitate does not form at once or after slight warming. Store in the dark. If a precipitate forms during storage, use only the clear supernatant.

p-Anisaldehyde Sulfuric Acid TS (4-Methoxy Benzaldehyde-Sulfuric acid TS)

To 0.5 mL of 4-methoxy benzaldehyde add 0.1 mL of glacial acetic acid, 0.5 mL of concentrated sulfuric acid and 9 ml of ethanol, and mix well. Prepare this solution fresh.

Antimony Trichloride TS

Dissolve 20.0 g of antimony trichloride in chloroform to make 100 mL, and filter if necessary.

Bromocresol Green TS*
(Bromocresol Blue TS*)

Dissolve 50.0 mg of bromocresol green in 100 mL of alcohol, and filter if necessary. For use in pH measurement, dissolve 50.0 mg of bromocresol green in 1.4 mL of 0.05 N sodium hydroxide, and dilute with recently boiled and thoroughly cooled water to 100 mL.

Chloral Hydrate TS

Dissolve 50.0 g of chloral hydrate in a mixture of 15 mL of water and 10 mL of glycerin.

Cupric Tartrate TS, Alkaline
(Fehling's Solution)

For use, mix equal volumes of Solutions A and B at the time required.

Solutions A: Dissolve 34.66 g of carefully selected, small crystals of cupric sulfate, showing no trace of efflorescence of adhering moisture, in water to make 500 mL. Store in well-stoppered glass containers.
Solutions B: Dissolve 173.0 g of crystallized potassium sodium tartrate and 50.0 g of sodium hydroxide in water to make 500 mL. Store in glass containers with rubber stoppers.

Diazotized *p*-Nitroaniline TS

Dissolve 0.35 g of *p*-nitroaniline in 5 mL of hydrochloric acid, and dilute with water to 500 mL as Solution A. Disslove 5.0 g of sodium nitrite in 70 mL of water as Solutions B. For use, mix equal volumes of Solutions A and B, and store in the cold water at the time required.

***p*-Dimethylaminobenzaldehyde TS**

Dissolve 125.0 mg of *p*-dimethylaminobenzaldehyde in a cooled mixture of 65 mL of sulfuric acid and 35 mL of water, and add 0.05 mL of ferric chloride TS. Use within 7 days.

2,4-Dinitrophenylhydrazine TS

Dissolve 1.5 g of 2,4-dinitrophenylhydrazine in a cooled mixture of 10 mL of sulfuric acid and 10 mL of water, dilute with aldehyde-free ethanol to 100 mL, and filter if necessary.

2,4-Dinitrophenylhydrazine TS, Alcoholic

Dissolve 1.5 g of 2,4-dinitrophenylhydrazine in a cooled mixture of 10 mL of sulfuric acid and 10 mL of water, dilute with 1 volume of absolute ethanol and 3 volumes of water to 100 mL, and filter if necessary.

Dragendorff's TS
(Dragendorff's Reagent)

Solution A: Dissolve 0.85 g of bismuth subnitrate in 10 mL of glacial acetic acid and 40 mL of water.
Solution B: Dissolve 8.0 g of potassium iodide in 20 mL of water.

Mix equal portions of solution A and solution B to obtain a stock solution.
Mix 10 mL of the stock solution with 20 mL of glacial acetic acid, and dilute with water to make 100 mL.

Dragendorff's TS, Modified
(Dragendorff's Reagent, Modified)

Solution A: Dissolve 1.7 g of bismuth subnitrate in 20 mL of glacial acetic acid and 80 mL of water, warning if necessary, and allow cool.

Solution B: Dissolve 35.0 g of potassium iodide in 105 mL of water.

Mix equal portions of solution A and solution B to obtain a stock solution, which can be stored in a refrigerator for several months in a dark bottle.
Dilute 10 mL of the stock solution with water to 100 mL, add 10 mL of glacial acetic acid, and dissolve 120 mg of iodine in with vigorous shaking.

Store in a refrigerator, and use within 2 weeks.

Dragendorff's Spray TS, Modified
(Dragendorff's Spray Reagent, Modified)

Solution A: Dissolve 1.7 g of bismuth subnitrate and 20 g of tartaric acid in 80 mL of water.

Solution B: Dissolve 16.0 g of potassium iodide in 40 mL of water.

Mix equal portions of solution A and solution B to obtain a stock solution, and mix 5 mL of the stock solution with 50 mL of tartaric acid solution (1 in 5).

Ferric Perchlorate TS
(Iron (III) Perchlorate Hexahydrate TS)

With the aid of heat, dissolve 0.8 g of iron powder slowly in 70% perchloric acid, Cool the solution and dilute with absolute ethanol to 100 mL. For use, to 20 mL of the supernatant add 6.0 mL of 70% perchloric acid, and dilute with absolute ethanol to 500 mL.

Ferric Trichloride TS

Dissolve 9.0 g of ferric trichloride in water and make to 100 mL.

Ferrous Sulfate TS

Dissolve 8.0 g of clear crystals of ferrous sulfate in 100 mL of recently boiled and thoroughly cooled water. Prepare this solution fresh.

Fuchsin Solution

Add 100.0 mL of the solution (0.1% w/v) to a cooled mixture of 40 mL of sulfuric acid and 60 mL of water, dilute with water to 200 mL, and allow to stand until an orange-yellow color develops in the solution.

Fuchsin-Sulfurous Acid TS

Dissolve 200.0 mg of basic fuchsin in 120 mL of hot water, and allow the solution to cool. Add a solution of 2.0 g of anhydrous sodium sulfite in 20 mL of water, and then add 2 mL of hydrochloric acid. Dilute the solution with water to 200 mL, and allow to stand for at least 1 hour. Prepare this solution fresh.

Glycerin Base TS

To 200.0 g of glycerin add water to bring the total weight to 235 g. Add 140 mL of 1 N sodium hydroxide and 50 mL of water.

Hydroxylamine Hydrochloride TS

Dissolve 3.5 g of hydroxylamine hydrochloride in 95 mL of 60% alcohol, and add 0.5 mL of bromophenol blue solution (1 in 1000 of alcohol) and 0.5 N alcoholic potassium hydroxide until a greenish tint develops in the solution. Then add 60% alcohol to make 100 mL.

Hydroxylamine Hydrochloride-Ethanol TS (Hydroxylammonium Chloride-Ethanol TS)

Dissolved 34.8 g of hydroxylammonium chloride in water to make 100 mL solution A. Dissolved 10.3 g of sodium acetate trihydrate and 86.5 g of sodium hydroxide in water to make 1000 mL solution B.

Mix 1 volume of Solution A, 1 volume of Solution B and 4 volumes of ethanol.

Iodine TS

Use 0.1 N Iodine (General rule 9006).

Lead Acetate TS

Dissolve 9.5 g of clear, transparent crystals of lead acetate in recently boiled water to make 100 mL. Store in well-stoppered glass containers.

Mercuric Nitrate TS

Dissolve 40.0 g of mercuric oxide (red or yellow) in a mixture of 32 mL of nitric acid and 15 mL of water. Store in glass containers, protected from light.

Mercuric-Potassium Iodide TS (Mayer's reagent)

Dissolve 1.358 g of mercuric chloride in 60 mL of water. Dissolve 5.0 g of potassium iodide in 10 mL of water. Mix the two solutions, and dilute with water to 100 mL.

Millon's Reagent

To 2.0 mL of mercury in a conical flask add 20.0 mL of nitric acid. Shake the flask under a hood to break up the mercury into small globules. After about 10 minutes, add 35 mL of water, and, if a precipitate or crystals appear, add sufficient dilute nitric acid (1 in 5, prepared from nitric acid which the oxides have been removed by blowing air through it until it is colorless) to dissolve the separated solid. Add sodium hydroxide solution (1 in 10) dropwise, with thorough mixing, until the curdy precipitate that forms after the addition of each drop no longer redissolves but is dispersed to form a suspension. Add 5 mL more of the dilute nitric acid, and mix. Prepare this solution fresh.

Molisch TS (α-Naphthol TS)

Dissolve 1.0 g of α-naphthol in 25 mL of methanol. Prepare this solution fresh.

Phenolphthalein TS*

Dissolve 1.0 g of phenolphthalein in 100 mL of alcohol.

Potassium Ferrocyanide TS

Dissolve 1.0 g of potassium ferrocyanide in 10 mL of water. Prepare this solution fresh.

Potassium Hydroxide TS

Dissolve 6.5 g of potassium hydroxide in water to make 100 mL.

Potassium Hydroxide TS, Alcoholic

Dissolve 10.0 g of potassium hydroxide in alcohol to make 100 mL. Prepare this solution fresh.

Potassium Permanganate TS

Use 0.1 N Potassium Permanganate (General rule 9006).

Silver Nitrate TS

Use 0.1 N Silver Nitrate (General rule 9006).

Silicotungstic Acid TS

Dissolve 10.0 g of silicotungstic acid in water to make 100 mL.

Sodium Fluoride TS

Dry about 500.0 mg of sodium fluoride at 200 ℃ for 4 hours. Accurately weigh 222 mg of the dried material, and dissolve in water to make 100 mL. Dilute 10.0 mL of this solution with water to 1000 mL. Each mL of this solution corresponds to 0.01 mg of fluorine (F).

Sodium Hydroxide TS

Dissolve 4.3 g of sodium hydroxide in water to make 100 mL.

Sodium Hydroxide Solution (10%)

Dissolve 20.0 g of sodium hydroxide in water to make 200 mL.

Sodium Hypochlorite TS

Passing chlorine into sodium hydroxide TS while cooling with ice. Prepare before use.
Clear, yellowish-green solution with an odor of chlorine. Gradually deteriorates if affected by light. Preserve in light-resistant containers, at a temperature not exceeding 25℃. It contains between 4.0% and 6.0% of NaClO.

Assay:
Weigh accurately, in a tared glass-stoppered flask, about 3 mL of the sample solution, and dilute with 50 mL of water. Add 2.0 g of potassium iodide and 10 mL of 6 N acetic acid, and titrate the liberated iodine with 0.1 N sodium thiosulfate VS, adding 3 mL of starch TS as the indicator. Each mL of 0.1 N sodium thiosulfate is equivalent to 3.723 mg of NaClO.

Starch-Potassium Iodide TS

Dissolve 500.0 mg of potassium iodide in 100 mL of freshly prepared starch TS. Use within 24 hours.

Starch TS

Triturate 0.5 g of soluble starch with 5 mL of cold water. Add to 100 mL of boiling water, and boil for 2 minutes with continuous stirring. Cool, and use only the clear solution.

Thioacetamide TS

Dissolve 4.0 g of thioacetamide in 100 mL of water.

Thioacetamide-Glycerin Base TS

Mix 0.2 mL of thioacetamide TS and 1 mL of glycerin base TS, and heat in a boiling water bath for 20 seconds. Use the mixture immediately.

Thymolphthalein TS*

Dissolve 100.0 mg of thymolphthalein in 100 mL of alcohol, and filter if necessary.

Triketohydrindene Hydrate TS (Ninhydrin TS)

Dissolve 200.0 mg of triketohydrindene hydrate in water to make 10 mL. Prepare this solution fresh.

Trinitrophenol TS (Picric Acid TS)

Dissolve the equivalent of 1.0 g of anhydrous trinitrophenol in 100 mL of hot water. Cool the solution, and filter if necessary.

Vanillin Sulfate TS

Dissolve 0.5 g vanillin in 100 mL mixture of concentrated sulfuric acid and ethanol (4: 1).

(9003) Indicators

Indicators are reagents used to indicate the completion of a chemical reaction in volumetric analysis or to indicate the hydrogen-ion concentration (pH) of solutions by specific color changing reactions. Indicators are usually prepared as solutions or test papers. All indicators required in this pharmacopeia are listed below except the necessary solutions of indicators listed among the section of test solutions.

Bromocresol Green (Bromocresol Blue)

$C_{21}H_{14}Br_4O_5S$ MW: 698.01

White or pale buff-colored powder. Slightly soluble in water; soluble in alcohol and in solutions of alkali hydroxides. Transition interval: from pH 4.0 to 5.4. Color change: from yellow to blue.

Methyl Orange

$C_{14}H_{14}N_3NaO_3S$ MW: 327.33

Orange-yellow powder or crystalline scales. Slightly soluble in cold water; readily soluble in hot water; insoluble in alcohol. Transition interval: from pH 3.1 to 4.4. Color change: from red to yellow.

Methyl Red

$2\text{-}[4\text{-}(CH_3)_2NC_6H_4N{:}N]C_6H_4COOH{\bullet}HCl$ MW: 305.76

Dark-red powder or violet crystals. Sparingly soluble in water; soluble in alcohol. Transition interval: from pH 4.2 to 6.2. Color change: from red to yellow.

Phenolphthalein

$C_{20}H_{14}O_4$ MW: 318.32

White or faintly yellowish-white, crystalline powder. Insoluble in water; soluble in alcohol. Transition interval: from pH 8.0 to 10.0. Color change: from colorless to red.

Thymolphthalein

$C_{28}H_{30}O_4$ MW: 430.55

White to slightly yellow, crystalline powder. Insoluble in water; soluble in alcohol and in solutions of alkali hydroxides. Transition interval: from pH 9.3 to 10.5. Color change: from colorless to blue.

(9004) Indicator Test Papers

Treat strong, white filter paper with hydrochloric acid, and wash with water until the last washing no longer shows an acid reaction to methyl red. Then treat with ammonia TS, and wash again with water until the last washing is not alkaline to phenolphthalein. After thorough drying, saturate the paper with the proper strength of indicator solutions, and carefully dry in still air, unless otherwise specified, by suspending it in a space free from acid, alkali, and other fumes. Store the papers in well-closed containers, protected from moisture and light.

(9005) Colorimetric Solutions (CS)

These solutions are used in the preparation of the colorimetric standards for certain drugs. Store the solutions in corrosion resistant containers with glass stopper.

Comparison of colors as directed in the tests preferably is made in matched color-comparison tubes or in a suitable colorimeter under conditions that ensure that the colorimetric reference solution and that of the specimen under test are treated alike in all respects. The comparison of colors is best made in layers of equal depth, and viewed transversely against a white background. It is particularly important that the solutions be compared at the same temperature, preferably 25℃.

(9006) Volumetric Solutions (VS)

Normal Solutions: Normal solutions which also known as equivalent solutions are solutions that contain 1 gram of the active substance in each 1000 mL of solution; that is an amount equivalent to 1.0079 g of hydrogen or 7.9997 g of oxygen.

Normal solutions or other special normal solutions are marked as follows: normal, 1 N; double-normal, 2 N; half-normal, 0.5 N; tenth-normal, 0.1 N; fiftieth-normal, 0.02 N; hundredth-normal, 0.01 N; two hundredth-normal, 0.005 N, thousandth-normal, 0.001 N.

Molar Solutions: Molar solutions are solutions that contain 1 gram-molecule of the reagent in 1000 mL. For example, a molar solution of sulfuric acid contains 98.07 g of H_2SO_4 each liter and a molar solution of potassium dichromate contains 294.22 g of $K_2Cr_2O_7$ each liter.

Molar solutions are designated as M, a gram-molecule of the reagent is designated as 1M, one-tenth of a gram-molecule of the reagent is designated as 0.1 M; and other molarities are similarly indicated.

It is more difficult to prepare standard solutions with a desired theoretical normality, and this is not essential. A solution which concentration is approximated to the desired normality is prepared and standardized the concentration, titrate the titer of the solution, and prepare for use.

All volumetric solution, whether made by direct dissolved procedure or by dilution from a stronger solution, must be completely mixed by shaking before standardization. As the strength of a standard solution may change by long time standing, the factor should be calibrated by determining again frequently.

Dilute solutions that are not stable, for instance, dilute potassium permanganate 0.01 N and dilute sodium thiosulfate 0.01 N, should be prepared by exactly diluting the higher normality of solutions with freshly boiled and cooled water on the same day.

When solutions with several normalities are prepared by only one reagent, the details of the preparation and standardization are usually given for the normality solution which is most frequently required. Stronger or weaker solutions are prepared and standardized in the same general manner as described, the weaker solution can be diluted from the higher solution, and determine the normality again.

Preparation and Standardization of Volumetric Solutions: The following directions give only one method for standardization, but other methods of standardization which has the same degree of accuracy is capable, may be used. All volumetric solutions are be prepared, standardized, and used at the standard temperature of 25℃. If a titration is carried out with the volumetric solution at a markedly different temperature, standardize the volumetric solution used as the titrant at the different temperature, or make a suitable temperature correction.

Hydrochloric Acid (1 N)

HCl: 36.46 36.46 g in 1000 mL

Take 85 mL of hydrochloric acid in a 1000 mL volumetric flask, dilute to 1000 mL with water, mix well, and then determine the titer by any method below:

1. Weigh accurately about 1.5 g of anhydrous sodium carbonate primary standard, previously dried at 270℃ for 1 hour, and dissolve it in 100 mL of water, add 2 drops of methyl red as an indicator, titrate slowly, stirring constantly, until the pink color occurs in the solution, boil, cool, continue titrate until the pink color do not disappear by heating. According to the results of titrations, calculate the normality: Each mL of 1 N hydrochloric acid is equivalent to 52.99 mg of anhydrous sodium carbonate. If necessary, adjust the normality to 1 N.
2. Accurately pipet 20 mL of the specimen, place it in 300-mL flask, dilute with 130 mL of water, add 5 drops of nitric acid, then slowly add 40 mL of silver nitrate (1 in 10), stirring constantly, until the precipitates of silver chloride is totally produced (if necessary, add a small quantity of silver nitrate solution). Boil the mixture carefully for 5 minutes, then stand in the dark, until the precipitates are sink in the bottom of the beaker, and the layer of the liquid is totally clear, and then filter by tared filtering crucible, wash the precipitates with water, add nitric acid to acidify water, until wash liquid has no silver salt reaction, dry at 110℃ to constant, according to the weight of silver chloride, calculate the normality of hydrochloric acid, protect silver chloride from light in the test, avoid deteriorated and effect the result.

The equivalent solutions in various normalities and the weight of HCl in each 1000 mL of solution as follows:

Equivalent solution	The weight of HCl in each 1000 mL of solution
1 N	36.46 g
0.5 N	18.23 g
0.2 N	7.292 g
0.1 N	3.646 g
0.05 N	1.823 g
0.02 N	0.7292 g
0.01 N	0.3646 g
0.005 N	0.1823 g
0.001 N	0.03646 g

Iodine (0.1 N)

I: 126.91 12.69 g in 1000 mL

1. Dissolve 36.0 g of potassium iodide in 100 mL of water, then accurately weighed 12.75 g of sublimation of iodine, rapidly added, add 3 drops of hydrochloric acid and dilute with water to 1000 mL, according the weight of iodine to calculate the normality.
2. Dissolve 36.0 g of potassium iodide in 100 mL of water, then accurately weighed 14.0 g of iodine, rapidly added, add 3 drops of hydrochloric acid and dilute with water to 1000 mL, and calculate the normality by the method below.
3. Weigh accurately about 150 mg of arsenic trioxide primary standard, previously grinding and dried to constant weight at 100℃, and dissolve it in 20 mL of 1 N sodium hydroxide by heating gently. Add 40 mL of water, 2 drops of methyl orange, and dilute hydrochloric acid until the color turns from yellow to pink, then add 2.0 g of sodium bicarbonate, dilute with 50 mL of water and 3 mL of starch TS as an indicator, titrate with 1N iodine VS until the solution is blue, according the result of titration and calculate the normality. Each mL of 0.1 N iodine is equivalent to 4.946 mg of arsenic trioxide. Preserve in well closed amber color glass stopper bottle and protected from light, the normality is usually adjusted.

Potassium Permanganate (0.1 N)

$KMnO_4$: 158.04 3.161g in 1000 mL

Take about 3.3 g of potassium permanganate in a flask, dissolve in 1000 mL of water and boil the solution for about 15 minutes, stopper, stand at least 2 days, and filter through an asbestos filter which in the bottom of a glass crucible. Standardize the filtrate as follows.

Weigh accurately about 200 mg of sodium oxalate primary standard, previously dried to constant weight at 110℃, dissolve it in 250 mL of water and add 7 mL of sulfuric acid, heat to about 70℃, then slowly add the permanganate solution by a burette, with constant

stirring, until a pale pink color persists for 15 seconds. The temperature of the solution should not be lower than 60℃ at the end of titration, according to the result of titration calculate the normality. Each mL of 0.1 N potassium permanganate is equivalent to 6.700 mg of sodium oxalate.

Preserve in well closed amber color glass stopper bottle, the normality is usually adjusted.

The equivalent solutions in various normalities and the weight of $KMnO_4$ in each 1000 mL of solution as follows:

Equivalent solution	The weight of $KMnO_4$ in each 1000 mL of solution
1 N	31.61 g
0.1 N	3.161 g
0.02 N	0.6321 g
0.01 N	0.3161 g

Sodium Hydroxide (1 N)

NaOH: 40.00 40.00 g in 1000 mL

Dissolve 45.0 g of sodium hydroxide in 950 mL of water, add freshly prepared saturated barium hydroxide until the precipitate is not produced, mix well, tightly stoppered, stand for overnight. Pour out or filter the upper layer of liquid, determine the normality as follows:

1. Pipet accurately 30 mL of 1 N hydrochloric acid or 1 N sulfuric acid, dilute it with 50 mL of freshly boiled and cooled water, add 2 drops of phenolphthalein as an indicator, titrate with the specimen until the pink color is produced lastingly, according the result of titration to calculate the normality.
2. Weigh accurately about 6 g of potassium hydrogen phthalate primary standard(if the specimen is bid crystals, need to be crushed), previously dried at 105℃ for 3 hours, and dissolve it in 75 mL of freshly boiled and cooled water, add 2 drops of phenolphthalein as an indicator, titrate with 1N Sodium Hydroxide until the pink color is produced lastingly, and calculate the normality. Each mL of 1 N sodium hydroxide is equivalent to 204.2 mg of potassium hydrogen phthalate. It freely absorbs carbon dioxide when exposing to air, so the solution places in a glass-stopper bottle, the glass bottle has two-hole rubber stoppers, one hole insert in a tube with mixture of sodium hydroxide and calcium oxide, another hole is inserted with a glass tube to suck out the sodium hydroxide solution. Measured the normalities of the solution frequently.

The equivalent solutions in various normalities and the weight of NaOH in each 1000 mL of solution as follows:

Equivalent solution	The weight of NaOH in each 1000 mL of solution
1 N	40.00 g
0.5 N	20.00 g
0.2 N	8.00 g
0.1 N	4.00 g
0.05 N	2.00 g
0.02 N	0.80 g
0.01 N	0.40 g
0.005 N	0.20 g
0.001 N	0.040 g

Sulfuric Acid (1 N)

H_2SO_4: 98.08 49.04 g in 1000 mL

Take 30 mL of sulfuric acid, add slowly in about 1020 mL of water with stirring, cool to 25℃, determine the normality as follows.

1. Determine the normality of the sulfuric acid by the method of determination the normality of 1N hydrochloric acid with sodium carbonate (general rule 9006).
2. Weigh accurately 20 mL of the sample, put in a 500-mL beaker, and add 25 mL of water and 1 mL of hydrochloric acid, boiling, slowly add hot barium chloride solution with stirring until the precipitate of barium sulfate is produced completely. Heat on a hot plate for 1 hour, filter by a tared filter crucible, wash the residue with hot water, until the washed liquid has no chloride reaction, dried, ignite to constant weight, calculated the normality by the weight of barium sulfate.

The equivalent solutions in various normalities and the weight of H_2SO_4 in each 1000 mL of solution as followst

Equivalent solution	The weight of H_2SO_4 in each 1000 mL of solution
1 N	49.04 g
0.5 N	24.52 g
0.2 N	9.808 g
0.1 N	4.904 g
0.05 N	2.452 g
0.02 N	0.980 g
0.01 N	0.4904 g

X. Appliances and Apparatus

Please refer to the general notice of Chinese version.

XI. A List of Poisonous Chinese Materia Medica

Item	Official Name
Shengcianjinzih 生千金子	Euphorbiae Semen
Shengchuanwu 生川烏	Aconiti Radix
Shengtiansianzih 生天仙子	Hyoscyami Semen
Shengbadou 生巴豆	Crotonis Semen
Shengbansia 生半夏	Pinelliae Rhizoma
Shenggansuei 生甘遂	Kansui Radix
Shengbaifuzih 生白附子	Typhonii Rhizoma
Shengfuzih 生附子	Aconiti Lateralis Radix
Shengnansing 生南星	Arisaematis Rhizoma
Shenglangdu 生狼毒	Euphorbiae Ebracteolatae Radix
Shengcaowu 生草烏	Aconiti Kusnezoffii Radix
Shengmacianzih 生馬錢子	Strychni Semen
Shengtenghuang 生藤黃	Garciniae Resina
Baijiangdan 白降丹	Hydrargyrum Chloratum Compositum
Yuanhua 芫花	Daphnis Genkwa Flos
Yangjinhua 洋金花	Daturae Flos
Pishih 砒石	Arsenolite
Pishuang 砒霜	Arsenicum
Banmao 斑蝥	Mylabris
Syonghuang 雄黃	Realgar
Chansu 蟾酥	Bufonis Venenum

Ministry of Health and Welfare 衛生福利部

XII. 200 Standard TCM Formulas

The list is based on announcement of 100 Standard TCM Formulas including Liu-Wei-Di-Huang-Wan from Department of Health, Executive Yuan on August, 31,1995 with document serial Wei-Shu-Yao-Jhih-Zih NO.84056272 and announcement of another 100 Standard TCM Formulas including Sheng-Yu-Tang on June, 29, 2000 with document serial Wei- Shu-Yao-Jhih-Zih NO. 89037929, a total of 200 Standard TCM Formulas.

No.	Formula Name	Reference	Ingredients	Effects	Indications
1	Liou-Wei-Di-Huang-Wan (Liu-Wei-Di-Huang-Wan) 《Wan》	Siao-Er-Yao-Jheng-Jhih-Jyue (Xiao-Er-Yao-Zheng-Zhi-Jue)	Rehmanniae Radix Praeparata 8, Corni Sarcocarpium 4, Dioscoreae Rhizoma 4, Alismatis Rhizoma 3, Moutan Radicis Cortex 3, Poria 3. (Daily dosage 25 g)	Nourish yin to tonify the kidney.	Deficiency of the liver and kidney, lumbago and sore feet, dizziness and blurred vision, wasting-thirst, dry tongue and sore throat, heel pain.
		Key to Therapeutics of Childen's Diseases			
	六味地黃丸《丸》	小兒藥證直訣	Add honey q.s. to make pills in traditional formula.		
2	Ba-Wei-Di-Huang-Wan (Ba-Wei-Di-Huang-Wan) 《Wan》	Yi-Fang-Ji-Jie (Yi-Fang-Ji-Jie)	Poria 3, Moutan Radicis Cortex 3, Alismatis Rhizoma 3, Rehmanniae Radix Praeparata 8, Corni Sarcocarpium 4, Dioscoreae Rhizoma 4, Aconiti Lateralis Radix Preparata 1, Cinnamomi Cortex 1. (Daily dosage 27 g)	Warm and tonify kidney yang.	Kidney yang deficiency, debilitation of the life gate fire, nocturia, spontaneous sweating and tinnitus.
		Collected Explanation on Prescriptions			
	八味地黃丸《丸》	醫方集解	Add honey q.s. to make pills in traditional formula.		
3	Jhih-Bo-Di-Huang-Wan (Zhi-Bo-Di-Huang-Wan) 《Wan》	Yi-Fang-Ji-Jie (Yi-Fang-Ji-Jie)	Rehmanniae Radix Praeparata 8, Corni Sarcocarpium 4, Poria 3, Dioscoreae Rhizoma 4, Moutan Radicis Cortex 3, Alismatis Rhizoma 3, Anemarrhenae Rhizoma 2, Phellodendri Cortex 2. (Daily dosage 29 g)	Nourish yin to downbear fire.	Dizziness, tinnitus, dry tongue and sore throat, lumbar vertebrae pain.
		Collected Explanation on Prescriptions			
	知柏地黃丸《丸》	醫方集解	Add honey q.s. to make pills in traditional formula.		
4	Ci-Jyu-Di-Huang-Wan (Qi-Ju-Di-Huang-Wan) 《Wan》	Jhong-Guo-Yi-Syue-Da-Cih-Dian (Zhong-Guo-Yi-Xue-Da-Ci-Dian)	Lycii Fructus 2, Chrysanthemi Flos 2, Rehmanniae Radix Praeparata 8, Corni Sarcocarpium 4, Dioscoreae Rhizoma 4, Poria 3, Moutan Radicis Cortex 3, Alismatis Rhizoma 3. (Daily dosage 29 g)	Enrich the kidney and nourish the liver.	Liver-kidney yin deficiency, dizziness and blurred vision, dry and painful eye, windward tears.
		Chinese Medical Science			

No.	Formula Name	Reference	Ingredients	Effects	Indications
		Dictionary			
	杞菊地黃丸《丸》	中國醫學大辭典	Add honey q.s. to make pills in traditional formula.		
5	Shen-Líng-Bai-Jhu-San (Shen-Ling-Bai-Zhu-San) 《San》	Tai-Ping-Huei-Min-He-Ji-Jyu-Fang (Tai-Ping-Hui-Min-He-Ji-Ju-Fang)	Lablab Album Semen 2.3, Ginseng Radix 3, Poria 3, Atractylodis Macrocephalae Rhizoma 3, Glycyrrhizae Radix et Rhizoma 3, Dioscoreae Rhizoma 3, Nelumbinis Sarcocarpium 1.5, Platycodi Radix 1.5, Coicis Semen 1.5, Amomi Fructus 1.5, Jujubae Fructus 1.5. (Daily dosage 24.8 g)	Tonify qi and fortify the spleen, drain dampness and harmonize the stomach.	Spleen-stomach weakness, poor appetite and sloppy stool.
		Prescription of Peaceful Benevolent Dispensary			
	參苓白朮散《散》	太平惠民和劑局方	Without Jujubae Fructus in traditional formula.		
6	Sih-Jyun-Zih-Tang (Si-Jun-Zi-Tang)	Yi-Fang-Ji-Jie (Yi-Fang-Ji-Jie)	Ginseng Radix 6, Poria 6, Glycyrrhizae Radix et Rhizoma Praeparata cum Melle 3, Atractylodis Macrocephalae Rhizoma 6, Zingiberis Rhizoma Recens 3, Jujubae Fructus 2. (Daily dosage 26 g)	Replenish qi and fortify the spleen.	Spleen-stomach qi deficiency, indigestion, pale complexion, poor appetite and sloppy stool.
		Collected Explanation on Prescriptions			
	四君子湯	醫方集解			
7	Sih-Wu-Tang (Si-Wu-Tang)	Tai-Ping-Huei-Min-He-Ji-Jyu-Fang (Tai-Ping-Hui-Min-He-Ji-Ju-Fang)	Rehmanniae Radix Praeparata 7.5, Paeoniae Alba Radix 7.5, Angelicae Sinensis Radix 7.5, Chuanxiong Rhizoma 7.5. (Daily dosage 30 g)	Tonify and harmonize blood.	Dual deficiency of qi and blood, fatigue and debility.
		Prescription of Peaceful Benevolent Dispensary			
	四物湯	太平惠民和劑局方			
8	Bu-Jhong-Yi-Ci-Tang (Bu-Zhong-Yi-Qi-Tang)	Pi-Wei-Lun (Pi-Wei-Lun)	Astragali Radix 6, Ginseng Radix 4, Atractylodis Macrocephalae Rhizoma 2, Glycyrrhizae Radix et	Tonify the middle and replenish qi, harmonize and	Overexertion and fatigue, poor appetite and tasteless,

No.	Formula Name	Reference	Ingredients	Effects	Indications
	(Wan)《Wan》	Treatise on the Spleen and stomach	Rhizoma Praeparata cum Melle 4, Angelicae Sinensis Radix 2, Citri Reticulatae Pericarpium 2, Cimicifugae Rhizoma 1, Bupleuri Radix 1, Zingiberis Rhizoma Recens 3, Jujubae Fructus 2. (Daily dosage 27 g)	tonify the spleen and stomach.	spleen-stomach weakness and deficiency of original qi.
	補中益氣湯（丸）《丸》	脾胃論			
9	Liou-Jyun-Zih-Tang (Liu-Jun-Zi-Tang) (Wan)《Wan》	Tai-Ping-Huei-Min-He-Ji-Jyu-Fang (Tai-Ping-Hui-Min-He-Ji-Ju-Fang)	Ginseng Radix 5, Atractylodis Macrocephalae Rhizoma 5, Poria 5, Pinelliae Rhizoma Praeparatum 5, Glycyrrhizae Radix et Rhizoma Praeparata cum Melle 2.5, Citri Reticulatae Pericarpium 2.5, Zingiberis Rhizoma Recens 2.5, Jujubae Fructus 2.5. (Daily dosage 30 g)	Tonify qi and harmonize the middle.	Spleen-stomach weakness, poor appetite, indigestion, sloppy stool and qi deficiency with phlegm.
		Prescription of Peaceful Benevolent Dispensary			
	六君子湯（丸）《丸》	太平惠民和劑局方			
10	Guei-Pi-Tang (Gui-Pi-Tang)	Jiao-Jhu-Fu-Ren-Lian-Fang (Jiao-Zhu-Fu-Ren-Liang-Fang)	Ginseng Radix 3, Longan Arillus 3, Astragali Radix 3, Glycyrrhizae Radix et Rhizoma Praeparata cum Melle 1.5, Atractylodis Macrocephalae Rhizoma 3, Poria 3, Aucklandiae Radix 1.5, Angelicae Sinensis Radix 3, Ziziphi Spinosae Semen 3, Polygalae Radix 3, Zingiberis Rhizoma Recens 2, Jujubae Fructus 2. (Daily dosage 31 g)	Fortify the spleen and calm the heart, replenish qi and tonify blood.	Dual deficiency of the heart and spleen, deficiency of qi and blood, palpitations, insomnia, poor appetite, fatigue and menstrual irregularities.
		Corrected Effective Prescriptions for Women			
	歸脾湯	校註婦人良方			
11	Yang-Sin-Tang (Yang-Xin-Tang)	Jheng-Jhih-Jhun-Sheng (Zheng-Zhi-Zhun-Sheng)	Astragali Radix Praeparata cum Melle 3, Poria cum Pini Radice 3, Poria 3, Pinelliae Rhizoma Fermentata 3, Angelicae Sinensis Radix 3, Chuanxiong Rhizoma 3, Polygalae Radix 2, Ziziphi Spinosae Semen 2, Cinnamomi Cortex 2, Platycladi Semen 2, Schisandrae Chinensis Fructus 2, Ginseng Radix 2, Glycyrrhizae Radix et Rhizoma Praeparata cum Melle 1, Zingiberis	Tonify blood and nourish the heart, tranquilize and stabilize the mind.	Heart blood deficiency, disquieted heart spirit, insomnia and profuse dreaming.
		Standards for Diagnosis and Treatment			
	養心湯	證治準繩			

No.	Formula Name	Reference	Ingredients	Effects	Indications
			Rhizoma Recens 1, Jujubae Fructus 1. (Daily dosage 33 g)		
12	Ren-Shen-Yang-Rong-Tang (Ren-Shen-Yang-Rong-Tang) (Wan)《Wan》	Tai-Ping-Huei-Min-He-Ji-Jyu-Fang (Tai-Ping-Hui-Min-He-Ji-Ju-Fang)	Paeoniae Alba Radix 4, Angelicae Sinensis Radix 2.5, Cinnamomi Cortex Rasus 2.5, Glycyrrhizae Radix et Rhizoma Praeparata cum Melle 2.5, Citri Reticulatae Pericarpium 2.5, Ginseng Radix 2.5, Atractylodis Macrocephalae Rhizoma 2.5, Astragali Radix 2.5, Rehmanniae Radix Praeparata 2, Schisandrae Chinensis Fructus 2, Poria 2, Polygalae Radix 1.5, Zingiberis Rhizoma Recens 3, Jujubae Fructus 1. (Daily dosage 33 g)	Tonify qi and blood.	Spleen-lung qi deficiency, deficiency of nutrient and blood, poor appetite and tasteless, fatigue and emaciation.
		Prescription of Peaceful Benevolent Dispensary			
	人參養榮湯（丸）《丸》	太平惠民和劑局方			
13	Bai-He-Gu-Jin-Tang (Bai-He-Gu-Jin-Tang) (Wan)《Wan》	Yi-Fang-Ji-Jie (Yi-Fang-Ji-Jie)	Rehmanniae Radix Recens 4, Rehmanniae Radix Praeparata 6, Ophiopogonis Radix 3, Lilii Bulbus 2, Paeoniae Alba Radix 2, Angelicae Sinensis Radix 2, Fritillariae Cirrhosae Bulbus 2, Glycyrrhizae Radix et Rhizoma 2, Scrophulariae Radix 1.6, Platycodi Radix 1.6. (Daily dosage 26.2 g)	Nourish yin and clear heat, moisten the lung to resolve phlegm.	Lung-kidney yin deficiency, deficiency fire flaming upward, dry and painful throat, cough and panting.
		Collected Explanation on Prescriptions			
	百合固金湯（丸）《丸》	醫方集解	Add honey q.s. to make pills in traditional formula.		
14	Zih-Wan-Tang (Zi-Wan-Tang)	Yi-Fang-Ji-Jie (Yi-Fang-Ji-Jie)	Asteris Radix et Rhizoma 4, Asini Corii Colla 4, Anemarrhenae Rhizoma 4, Fritillariae Cirrhosae Bulbus 4, Platycodi Radix 2, Ginseng Radix 2, Poria 2, Glycyrrhizae Radix et Rhizoma Praeparata cum Melle 2, Schisandrae Chinensis Fructus 1.5. (Daily dosage 25.5 g)	Tonify the lung to suppress cough, clear heat to resolve phlegm.	Fatigue heat and chronic cough, phlegm with blood, lung atrophy and lung abscess.
		Collected Explanation on Prescriptions			
	紫菀湯	醫方集解			

No.	Formula Name	Reference	Ingredients	Effects	Indications
15	Cin-Ciou-Bie-Jia-San (Qin-Qiu-Bie-Jia-San)	Wei-Sheng-Bao-Jian (Wei-Sheng-Bao-Jian)	Trionycis Carapax 5, Gentianae Macrophyllae Radix 2.5, Anemarrhenae Rhizoma 2.5, Angelicae Sinensis Radix 2.5, Bupleuri Radix 5, Lycii Radicis Cortex 5, Mume Fructus 2, Artemisiae Annuae Herba 1.5. (Daily dosage 26 g)	Nourish yin and blood, clear heat to relieve bone-steaming fever.	Bone-steaming tidal fever, reddened lips and cheeks, night sweating and cough.
		Detailed of Analysis of Seasonal Febrile Diseases			
	秦艽鱉甲散	衛生寶鑑			
16	Yi-Ci-Cong-Ming-Tang (Yi-Qi-Cong-Ming-Tang)	Yi-Fang-Ji-Jie (Yi-Fang-Ji-Jie)	Astragali Radix 6, Glycyrrhizae Radix et Rhizoma 1.2, Ginseng Radix 6, Cimicifugae Rhizoma 1.8, Puerariae Radix 3.6, Viticis Simplicifoliae Fructus 3.6, Paeoniae Alba Radix 2.4, Phellodendri Cortex 2.4. (Daily dosage 27 g)	Replenish qi and upraise yang, disperse wind and clear heat.	Wind-heat harassing upward, headache and dizziness, the initial stage of cataract, tinnitus and deafness.
		Collected Explanation on Prescriptions			
	益氣聰明湯	醫方集解			
17	Ba-Jhen-Tang (Ba-Zhen-Tang) (Wan)《Wan》	Jheng-Jhih-Jhun-Sheng (Zheng-Zhi-Zhun-Sheng)	Angelicae Sinensis Radix 3, Chuanxiong Rhizoma 3, Paeoniae Alba Radix 3, Rehmanniae Radix Praeparata 3, Ginseng Radix 3, Atractylodis Macrocephalae Rhizoma 3, Poria 3, Glycyrrhizae Radix et Rhizoma Praeparata cum Melle 1.5, Zingiberis Rhizoma Recens 3, Jujubae Fructus 2. (Daily dosage 27.5 g)	Tonify both qi and blood.	Dual deficiency of qi and blood, lassitude of spirit and fatigue of limbs, poor appetite, yellow complexion and emaciation.
		Standards for Diagnosis and Treatment			
	八珍湯（丸）《丸》	證治準繩			
18	Ji-Sheng-Shen-Ci-Wan (Ji-Sheng-Shen-Qi-Wan) (Wan)《Wan》	Ji-Sheng-Fang (Ji-Sheng-Fang)	Rehmanniae Radix Praeparata 8, Corni Sarcocarpium 4, Dioscoreae Rhizoma 4, Poria 6, Moutan Radicis Cortex 3, Alismatis Rhizoma 3, Aconiti Lateralis Radix Preparata 1, Cinnamomi Cortex 1, Achyranthis Bidentatae Radix 2, Plantaginis Semen 2. (Daily dosage 34 g)	Warm the kidney and resolve qi, induce diuresis to alleviate edema.	Kidney yang deficiency, heavy aching lumbar and knees, inhibited urination.
		Recipes for Saving Lives			
	濟生腎氣丸《丸》	濟生方	Add honey q.s. to make pills in traditional formula.		

No.	Formula Name	Reference	Ingredients	Effects	Indications
19	Shih-Cyuan-Da-Bu-Tang (Shi-Quan-Da-Bu-Tang) (Wan)《Wan》	Tai-Ping-Huei-Min-He-Ji-Jyu-Fang (Tai-Ping-Hui-Min-He-Ji-Ju-Fang)	Poria 3, Atractylodis Macrocephalae Rhizoma 3, Ginseng Radix 3, Rehmanniae Radix Praeparata 3, Paeoniae Alba Radix 3, Glycyrrhizae Radix et Rhizoma Praeparata cum Melle 3, Astragali Radix 3, Cinnamomi Cortex 3, Angelicae Sinensis Radix 3, Chuanxiong Rhizoma 3, Zingiberis Rhizoma Recens 3, Jujubae Fructus 2. (Daily dosage 35 g)	Tonify blood and replenish qi.	Dual deficiency of qi and blood, fatigued limbs.
		Prescription of Peaceful Benevolent Dispensary			
	十全大補湯（丸）《丸》	太平惠民和劑局方	Without Zingiberis Rhizoma Recens and Jujubae Fructus, add honey q.s. to make pills in traditional formula.		
20	Huan-Shao-Dan (Huan-Shao-Dan) 《Wan》	Yang-Shih-Jia-Cang-Fang (Yang-Shi-Jia-Cang-Fang)	Dioscoreae Rhizoma 3, Achyranthis Bidentatae Radix 3, Poria 2, Corni Sarcocarpium 2, Broussonetiae Fructus 2, Eucommiae Cortex 2, Schisandrae Chinensis Fructus 2, Morindae Officinalis Radix 2, Cistanches Herba 2, Polygalae Radix 2, Foeniculi Fructus 2, Acori Graminei Rhizoma 1, Rehmanniae Radix Praeparata 1, Lycii Fructus 1, Jujubae Fructus 1. (Daily dosage 28 g)	Tonify the heart, kidney, spleen and stomach deficiency.	Spleen-kidney deficiency cold, blood and qi deficiency, weakness and night sweating, seminal emission and turbid urine.
		Yang's Family Prescriptions			
	還少丹《丸》	楊氏家藏方	Add honey q.s. to make pills in traditional formula.		
21	Huang-Ci-Wu-Wu-Tang (Huang-Qi-Wu-Wu-Tang)	Shan-Bu-Ming-Yi-Fang-Lun (Shan-Bu-Ming-Yi-Fang-Lun)	Astragali Radix 10, Paeoniae Alba Radix 5, Cinnamomi Ramulus 5, Zingiberis Rhizoma Recens 5, Jujubae Fructus 3. (Daily dosage 28 g)	Tonify qi and blood, harmonize the nutrient and defense.	Nutrient-defense qi and blood deficiency, invade wind pathogen, nutrient-blood obstruction, numbness of muscle and fatigued limbs.
		Revised Famous Doctor's Prescription			
	黃耆五物湯	刪補名醫方論			

No.	Formula Name	Reference	Ingredients	Effects	Indications
22	Ma-Huang-Tang (Ma-Huang-Tang)	Shang-Han-Lun (Shang-Han-Lun)	Ephedrae Herba 9, Cinnamomi Ramulus 6, Glycyrrhizae Radix et Rhizoma Praeparata cum Melle 3, Armeniacae Amarum Semen 5. (Daily dosage 23 g)	Promote sweating to release the exterior, diffuse the lung to calm panting.	Wind-cold induced by exopathogen, aversion to cold with fever, headache and generalized pain, panting without sweating.
		Treatise on Febrile Diseases			
	麻黃湯	傷寒論			
23	Guei-Jhih-Tang (Gui-Zhi-Tang)	Shang-Han-Lun (Shang-Han-Lun)	Cinnamomi Ramulus 6, Paeoniae Alba Radix 6, Glycyrrhizae Radix et Rhizoma Praeparata cum Melle 4, Zingiberis Rhizoma Recens 6, Jujubae Fructus 5. (Daily dosage 27 g)	Release the flesh to effuse the exterior, harmonize the nutrient and defense.	Wind-cold induced by exopathogen, headache and fever, sweating and aversion to wind, noisy nose and dry retching.
		Treatise on Febrile Diseases			
	桂枝湯	傷寒論			
24	Siao-Cing-Long-Tang (Xiao-Qing-Long-Tang)	Shang-Han-Lun (Shang-Han-Lun)	Ephedrae Herba 4, Paeoniae Alba Radix 4, Schisandrae Chinensis Fructus 1.5, Zingiberis Rhizoma 4, Glycyrrhizae Radix et Rhizoma Praeparata cum Melle 4, Cinnamomi Ramulus 4, Pinelliae Rhizoma Praeparatum 4, Asari Radix et Rhizoma 1.5. (Daily dosage 27 g)	Release the exterior to dissipate cold, warm the lung and resolve fluid retention.	Wind-cold induced by exopathogen, internal stagnation of fluid-dampness, aversion to cold with fever, absence of sweating, cough and panting, white and watery phlegm.
		Treatise on Febrile Diseases			
	小青龍湯	傷寒論			
25	Ge-Gen-Tang (Ge-Gen-Tang)	Shang-Han-Lun (Shang-Han-Lun)	Puerariae Radix 6, Ephedrae Herba 4.5, Cinnamomi Ramulus 3, Paeoniae Alba Radix 3, Glycyrrhizae Radix et Rhizoma Praeparata cum Melle 3, Zingiberis Rhizoma Recens 4.5, Jujubae Fructus 4. (Daily dosage 28 g)	Promote sweating to release the flesh.	Wind-cold induced by exopathogen, headache and fever, aversion to cold without sweating, contracture of the nape and neck.
		Treatise on Febrile Diseases			
	葛根湯	傷寒論			
26	Chai-Ge-Jie-Ji-Tang (Chai-Ge-Jie-Ji-Tang)	Jhong-Guo-Yi-Syue-Da-Cih-Dian (Zhong-Guo-Yi-Xue-Da-	Bupleuri Radix 2.5, Puerariae Radix 2.5, Notopterygii Rhizoma et Radix 2.5, Angelicae Dahuricae Radix 2.5,	Release the flesh and clear heat.	Headache and fever, vexation and insomnia, painful eye

No.	Formula Name	Reference	Ingredients	Effects	Indications
		Ci-Dian)	Scutellariae Radix 2.5, Paeoniae Alba Radix 2.5, Platycodi Radix 2.5, Glycyrrhizae Radix et Rhizoma 1.5, Gypsum Fibrosum 2.5, Zingiberis Rhizoma Recens 2, Jujubae Fructus 2. (Daily dosage 25.5 g)		socket and dry nose, dry throat and deafness, aversion to cold without sweating.
		Chinese Medical Science Dictionary			
	柴葛解肌湯	中國醫學大辭典			
27	Jiou-Wei-Ciang-Huo-Tang (Jiu-Wei-Qiang-Huo-Tang) 《Wan》	Cih-Shih-Nan-Jhih (Ci-Shi-Nan-Zhi)	Notopterygii Rhizoma et Radix 3, Saposhnikoviae Radix 3, Atractylodis Rhizoma 3, Asari Radix et Rhizoma 1, Chuanxiong Rhizoma 2, Angelicae Dahuricae Radix 2, Rehmanniae Radix Recens 2, Scutellariae Radix 2, Glycyrrhizae Radix et Rhizoma 2, Zingiberis Rhizoma Recens 3, Allii Fistulosi Bulbus Recens 3. (Daily dosage 26 g)	Release the exterior, dispel dampness and clear interior heat.	Wind-cold and dampness induced by exopathogen, headache, contracture of neck and limb pain.
		Medical Problems			
	九味羌活湯《丸》	此事難知			
28	Ren-Shen-Bai-Du-San (Ren-Shen-Bai-Du-San)	Tai-Ping-Huei-Min-He-Ji-Jyu-Fang (Tai-Ping-Hui-Min-He-Ji-Ju-Fang)	Ginseng Radix 3, Poria 3, Glycyrrhizae Radix et Rhizoma 1.5, Peucedani Radix 3, Chuanxiong Rhizoma 3, Notopterygii Rhizoma et Radix 3, Angelicae Pubescentis Radix 3, Platycodi Radix 3, Bupleuri Radix 3, Citri Immaturus Fructus 3, Zingiberis Rhizoma Recens 3, Menthae Herba 0.5. (Daily dosage 32 g)	Replenish qi and release the exterior, disperse wind and dispel dampness.	Wind-cold and dampness induced by exopathogen, aversion to cold with fever without sweating, contracture of the head and neck, limb and body pain, stuffiness and oppression in the chest and diaphragm, nasal congestion, cough with phlegm.
		Prescription of Peaceful Benevolent Dispensary			
	人參敗毒散	太平惠民和劑局方			
29	Chuan-Cyong-Cha-Tiao-San (Chuan-Qiong-Cha-Tiao-San)	Tai-Ping-Huei-Min-He-Ji-Jyu-Fang (Tai-Ping-Hui-Min-He-Ji-Ju-Fang)	Angelicae Dahuricae Radix 2, Glycyrrhizae Radix et Rhizoma 2, Notopterygii Rhizoma et Radix 2, Schizonepetae Herba 4, Chuanxiong Rhizoma 4, Asari	Dispel wind and relieve pain.	Migraine and aching all over the head.

No.	Formula Name	Reference	Ingredients	Effects	Indications
	《San》 川芎茶調散《散》	Prescription of Peaceful Benevolent Dispensary 太平惠民和劑局方	Radix et Rhizoma 1, Saposhnikoviae Radix 1.5, Menthae Herba 8. (Daily dosage 24.5 g)		
30	Jing-Fang-Bai-Du-San (Jing-Fang-Bai-Du-San) 荊防敗毒散	Ci-Siao-Liang-Fang (Qi-Xiao-Liang-Fang) Effective Prescriptions 奇效良方	Schizonepetae Herba 3, Saposhnikoviae Radix 3, Notopterygii Rhizoma et Radix 3, Angelicae Pubescentis Radix 3, Bupleuri Radix 3, Peucedani Radix 3, Chuanxiong Rhizoma 3, Citri Immaturus Fructus 3, Platycodi Radix 3, Poria 3, Glycyrrhizae Radix et Rhizoma 1.5, Zingiberis Rhizoma Recens 3, Menthae Herba 1. (Daily dosage 35.5 g)	Promote sweating to release the exterior, disperse wind and dispel dampness.	Wind-cold and dampness induced by exopathogen, aversion to cold with fever, contracture of the head and neck, limb and body pain, mumps.
31	Ma-Sing-Gan-Shih-Tang (Ma-Xing-Gan-Shi-Tang) 麻杏甘石湯	Shang-Han-Lun (Shang-Han-Lun) Treatise on Febrile Diseases 傷寒論	Ephedrae Herba 8, Armeniacae Amarum Semen 6, Glycyrrhizae Radix et Rhizoma Praeparata cum Melle 4, Gypsum Fibrosum 16. (Daily dosage 34 g)	Diffusion with pungent-cool, clear the lung to calm panting.	Pathogenic heat congesting the lung, fever, cough and panting.
32	Ma-Sing-Yi-Gan-Tang (Ma-Xing-Yi-Gan-Tang) 麻杏薏甘湯	Jin-Kuei-Yao-Lyue (Jin-Kui-Yao-Lue) Synopsis of Golden Cabinet 金匱要略	Ephedrae Herba 5, Glycyrrhizae Radix et Rhizoma Praeparata cum Melle 10, Coicis Semen 5, Armeniacae Amarum Semen 4. (Daily dosage 24 g)	Promote sweating to release the exterior, dispel wind-dampness.	Wind-dampness, generalized pain and fever, which worse in the late afternoon.
33	Ma-Huang-Fu-Zih-Si-Sin-Tang (Ma-Huang-Fu-Zi-Xi-Xin-Tang) 麻黃附子細辛湯	Shang-Han-Lun (Shang-Han-Lun) Treatise on Febrile Diseases 傷寒論	Ephedrae Herba 8, Aconiti Lateralis Radix Preparata 5, Asari Radix et Rhizoma 8. (Daily dosage 21 g)	Disperse exterior pathogen, warm the meridian to dissipate cold.	Get lesser yin disease, but fever and sunken pulse.
34	Da-Cheng-Ci-Tang	Shang-Han-Lun	Rhei Radix et Rhizoma 8, Magnoliae Cortex 16,	Drastic (purgative)	Yang brightness excess heat,

No.	Formula Name	Reference	Ingredients	Effects	Indications
	(Da-Cheng-Qi-Tang)	(Shang-Han-Lun)	Aurantii Immaturus Fructus 3, Natrii Sulfas 6. (Daily dosage 33 g)	heat-accumulation, eliminate stuffiness and remove food stagnation.	intestinal dryness and stool bind, abdominal stuffiness and fullness.
		Treatise on Febrile Diseases			
	大承氣湯	傷寒論			
35	Siao-Sian-Syong-Tang (Xiao-Xian-Xiong-Tang)	Shang-Han-Lun (Shang-Han-Lun)	Coptidis Rhizoma 3, Pinelliae Rhizoma 12, Trichosanthis Fructus 12. (Daily dosage 27 g)	Clear heat to resolve phlegm, disperse nodules to soothe the chest.	Phlegm-heat block the chest, stuffiness and painful below the heart.
		Treatise on Febrile Diseases			
	小陷胸湯	傷寒論			
36	Wu-Ji-San (Wu-Ji-San)	Tai-Ping-Huei-Min-He-Ji-Jyu-Fang (Tai-Ping-Hui-Min-He-Ji-Ju-Fang)	Citri Reticulatae Pericarpium 2, Citri Immaturus Fructus 2, Ephedrae Herba 2, Paeoniae Alba Radix 1, Chuanxiong Rhizoma 1, Angelicae Sinensis Radix 1, Glycyrrhizae Radix et Rhizoma Praeparata cum Melle 1, Poria 1, Pinelliae Rhizoma Praeparatum 1, Cinnamomi Cortex 1, Angelicae Dahuricae Radix 1, Magnoliae Cortex 1.5, Zingiberis Rhizoma Praeparata 1.5, Platycodi Radix 4, Atractylodis Rhizoma 8, Zingiberis Rhizoma Recens 2. (Daily dosage 31 g)	Release the exterior to dissipate cold, warm the middle and resolve accumulation.	Pathogenic cold induced by exopathogen, internal damage engendering cold and painful limb joints.
		Prescription of Peaceful Benevolent Dispensary			
	五積散	太平惠民和劑局方			
37	Shen-Su-Yin (Shen-Su-Yin)	Tai-Ping-Huei-Min-He-Ji-Jyu-Fang (Tai-Ping-Hui-Min-He-Ji-Ju-Fang)	Citri Reticulatae Pericarpium 2, Citri Immaturus Fructus 2, Platycodi Radix 2, Glycyrrhizae Radix et Rhizoma 2, Aucklandiae Radix 2, Pinelliae Rhizoma Praeparatum 3, Perillae Folium 3, Puerariae Radix 3, Peucedani Radix 3, Ginseng Radix 3, Poria 3, Zingiberis Rhizoma Recens 2, Jujubae Fructus 1. (Daily dosage 31 g)	Replenish qi and release the exterior, diffuse the lung to resolve phlegm.	Weakness, common cold, aversion to cold with fever, headache and nasal congestion, cough with copious phlegm.
		Prescription of Peaceful Benevolent Dispensary			
	參蘇飲	太平惠民和劑局方			
38	Siang-Su-San	Tai-Ping-Huei-Min-He-Ji-Jyu-	Citri Reticulatae Pericarpium 4, Cyperi Rhizoma 8,	Regulate qi and harmonize the	Wind-cold induced by

No.	Formula Name	Reference	Ingredients	Effects	Indications
	(Xiang-Su-San)	Fang (Tai-Ping-Hui-Min-He-Ji-Ju-Fang)	Perillae Folium 8, Glycyrrhizae Radix et Rhizoma Praeparata cum Melle 2, Zingiberis Rhizoma Recens 3, Allii Fistulosi Bulbus Recens 3. (Daily dosage 28 g)	middle, release the exterior to dissipate cold.	exopathogen, internal qi stagnation, physical cold and generalized heat, headache without sweating, stuffiness and oppression in the chest and stomach.
		Prescription of Peaceful Benevolent Dispensary			
	香蘇散	太平惠民和劑局方			
39	Siao-Yao-San (Xiao-Yao-San)	Tai-Ping-Huei-Min-He-Ji-Jyu-Fang (Tai-Ping-Hui-Min-He-Ji-Ju-Fang)	Glycyrrhizae Radix et Rhizoma Praeparata cum Melle 2, Paeoniae Alba Radix 4, Angelicae Sinensis Radix 4, Poria 4, Atractylodis Macrocephalae Rhizoma 4, Bupleuri Radix 4, Zingiberis Rhizoma Tostum 4, Menthae Herba 2. (Daily dosage 28 g)	Soothe the liver and release depression, nourish blood and fortify the spleen.	Blood deficiency, overexertion and fatigue, heavy head and blurred vision, menstrual irregularities, lassitude of spirit, poor appetite, nutrient-defense disharmony.
		Prescription of Peaceful Benevolent Dispensary			
	逍遙散	太平惠民和劑局方			
40	Jia-Wei-Siao-Yao-San (Jia-Wei-Xiao-Yao-San)	Jheng-Jhih-Jhun-Sheng (Zheng-Zhi-Zhun-Sheng)	Angelicae Sinensis Radix 4, Atractylodis Macrocephalae Rhizoma 4, Paeoniae Alba Radix 4, Bupleuri Radix 4, Poria 4, Glycyrrhizae Radix et Rhizoma Praeparata cum Melle 2, Moutan Radicis Cortex 2.5, Gardeniae Fructus 2.5, Zingiberis Rhizoma Tostum 4, Menthae Herba 2. (Daily dosage 33 g)	Soothe the liver and release depression, clear heat to cool the blood.	Liver depression, blood deficiency and fever, menstrual irregularities, disquieted fearful throbbing.
		Standards for Diagnosis and Treatment			
	加味逍遙散	證治準繩			
41	Huo-Siang-Jheng-Ci-San (Huo-Xiang-Zheng-Qi-San) (Wan)《Wan》	Tai-Ping-Huei-Min-He-Ji-Jyu-Fang (Tai-Ping-Hui-Min-He-Ji-Ju-Fang)	Arecae Pericarpium 3, Poria 3, Angelicae Dahuricae Radix 3, Perillae Folium 3, Citri Reticulatae Pericarpium 2, Platycodi Radix 2, Atractylodis	Release the exterior and resolve dampness, regulate qi and harmonize the middle.	Wind-cold induced by exopathogen, gastrointestinal discomfort, indigestion,

No.	Formula Name	Reference	Ingredients	Effects	Indications
		Prescription of Peaceful Benevolent Dispensary	Macrocephalae Rhizoma 2, Magnoliae Cortex 2, Pinelliae Rhizoma Fermentata 2, Glycyrrhizae Radix et Rhizoma Praeparata cum Melle 1, Agastachis Herba 3, Zingiberis Rhizoma Recens 3, Jujubae Fructus 1. (Daily dosage 30 g)		vomiting and diarrhea, food stagnation, summerheat stroke and failure to acclimatize to a new environment.
	藿香正氣散（丸）《丸》	太平惠民和劑局方	Traditional formula: grind into powder, add Zingiberis Rhizoma Recens and Jujubae Fructus q.s., and then decoct into water pills. Take 1/3 portion of the pills in warm orally, three times a day.		
42	Wu-Yao-Shun-Ci-San (Wu-Yao-Shun-Qi-San)	Tai-Ping-Huei-Min-He-Ji-Jyu-Fang (Tai-Ping-Hui-Min-He-Ji-Ju-Fang)	Ephedrae Herba 4, Citri Reticulatae Pericarpium 4, Linderae Radix 4, Chuanxiong Rhizoma 2, Bombyx Batryticatus 2, Citri Immaturus Fructus 2, Angelicae Dahuricae Radix 2, Glycyrrhizae Radix et Rhizoma 2, Platycodi Radix 2, Zingiberis Rhizoma 1, Zingiberis Rhizoma Recens 3, Jujubae Fructus 1. (Daily dosage 29 g)	Regulate qi and diffusion, dispel wind and resolve phlegm.	Numbness of the whole body, joint pain, difficulty in walking, sluggish speech, deviated eye and mouth, spastic sinews.
		Prescription of Peaceful Benevolent Dispensary			
	烏藥順氣散	太平惠民和劑局方			
43	Su-Zih-Jiang-Ci-Tang (Su-Zi-Jiang-Qi-Tang)	Tai-Ping-Huei-Min-He-Ji-Jyu-Fang (Tai-Ping-Hui-Min-He-Ji-Ju-Fang)	Angelicae Sinensis Radix 2, Glycyrrhizae Radix et Rhizoma 2, Magnoliae Cortex 2, Peucedani Radix 2, Citri Reticulatae Pericarpium 3, Cinnamomi Cortex 3, Pinelliae Rhizoma Praeparatum 5, Pinelliae Rhizoma 5, Zingiberis Rhizoma Recens 2, Jujubae Fructus 1. (Daily dosage 27 g)	Direct qi downward to calm panting, warm and resolve phlegm-dampness.	Phlegm-drool congestion, cough and panting, shortness of breath, fullness and oppression in the chest and diaphragm, discomfort in the throat.
		Prescription of Peaceful Benevolent Dispensary			
	蘇子降氣湯	太平惠民和劑局方			
44	Ding-Chuan-Tang (Ding-Chuan-Tang)	Jheng-Jhih-Jhun-Sheng (Zheng-Zhi-Zhun-Sheng)	Ginkgo Semen 6, Ephedrae Herba 4, Farfarae Flos 4, Mori Radicis Cortex 4, Pinelliae Rhizoma	Diffuse the lung to calm panting, clear heat to resolve	Heat symptom, panting and cough.

No.	Formula Name	Reference	Ingredients	Effects	Indications
		Standards for Diagnosis and Treatment	Praeparatum 4, Perillae Fructus 2.5, Armeniacae Amarum Semen 2, Scutellariae Radix 2, Glycyrrhizae Radix et Rhizoma 1.5. (Daily dosage 30 g)	phlegm.	
	定喘湯	證治準繩			
45	Yue-Jyu-Wan (Yue-Ju-Wan) 《Wan》	Dan-Si-Sin-Fa (Dan-Xi-Xin-Fa)	Atractylodis Rhizoma 5, Cyperi Rhizoma 5, Chuanxiong Rhizoma 5, Fermentata Medicata Massa 5, Gardeniae Fructus Praeparata 5. (Daily dosage 25 g)	Move qi to release depression.	Fullness and oppression in the chest and diaphragm, stomach duct and abdomen pain, gastric upset and acid regurgitation, indigestion, belching and vomiting induced by qi, blood, phlegm, fire, dampness and food depression.
		Danxi`s Experiential Therapy			
	越鞠丸《丸》	丹溪心法			
46	Huai-Hua-San (Huai-Hua-San)	Pu-Ji-Ben-Shih-Fang (Pu-Ji-Ben-Shi-Fang)	Sophorae Flos Praeparata 6, Platycladi Ramulus et Folium 6, Schizonepetae Spica 6, Citri Immaturus Fructus 6. (Daily dosage 24 g)	Clear intestinal heat, disperse wind, move qi and stop bleeding.	Intestinal wind and visceral toxin, hemorrhoid fistula and hematochezia.
		Experiential Prescriptions for Curing All People			
	槐花散	普濟本事方			
47	Shu-Jing-Huo-Sie-Tang (Shu-Jing-Huo-Xie-Tang)	Wan-Bing-Huei-Chun (Wan-Bing-Hui-Chun)	Glycyrrhizae Radix et Rhizoma 1, Angelicae Sinensis Radix 2, Paeoniae Alba Radix 2.5, Rehmanniae Radix Recens 2, Atractylodis Rhizoma 2, Cyathulae Radix 2, Citri Reticulatae Pericarpium 2, Persicae Semen 2,	Soothe menstruation, activate blood and dispel wind.	Joint pain, lumbago, intramuscular pain or whole body pains.

No.	Formula Name	Reference	Ingredients	Effects	Indications
		Recovery from All Ailments	Clematidis Radix et Rhizoma 2, Chuanxiong Rhizoma 1, Stephaniae Tetrandrae Radix 1, Notopterygii Rhizoma et Radix 1, Saposhnikoviae Radix 1, Angelicae Dahuricae Radix 1, Gentianae Radix et Rhizoma 1, Poria 1, Zingiberis Rhizoma Recens 3. (Daily dosage 27.5 g)		
	疏經活血湯	萬病回春			
48	Di-Dang-Tang (Di-Dang-Tang)	Shang-Han-Lun (Shang-Han-Lun)	Hirudo 10, Tabanus 1, Persicae Semen 2, Rhei Radix et Rhizoma cum Vino Preparati 10. (Daily dosage 23 g)	Attack and expel static blood.	Blood amass in lower energizer, hardness and fullness in lower abdomen and inhibited menstruation.
		Treatise on Febrile Diseases			
	抵當湯	傷寒論			
49	Sie-Fu-Jhu-Yu-Tang (Xie-Fu-Zhu-Yu-Tang)	Yi-Lin-Gai-Cuo (Yi-Lin-Gai-Cuo)	Angelicae Sinensis Radix 4.5, Rehmanniae Radix Recens 4.5, Persicae Semen 6, Carthami Flos 4.5, Citri Immaturus Fructus 3, Paeoniae Rubra Radix 3, Bupleuri Radix 1.5, Glycyrrhizae Radix et Rhizoma 1.5, Platycodi Radix 2.3, Chuanxiong Rhizoma 2.3, Cyathulae Radix 4.5. (Daily dosage 37.6 g)	Activate blood and resolve stasis, move qi to relieve pain.	Blood stasis in the chest, late afternoon tidal fever, chest pain for years, headache, persistent hiccup, internal heat, vexation and oppression, palpitations and insomnia.
		Correction on Errors of Medical Works			
	血府逐瘀湯	醫林改錯			
50	Bu-Yang-Huan-Wu-Tang (Bu-Yang-Huan-Wu-Tang)	Yi-Lin-Gai-Cuo (Yi-Lin-Gai-Cuo)	Astragali Radix 20, Rootlet of Angelicae Sinensis Radix 1, Paeoniae Rubra Radix 1, Pheretima 0.5, Chuanxiong Rhizoma 0.5, Persicae Semen 0.5, Carthami Flos 0.5. (Daily dosage 24 g)	Tonify qi, activate blood to free the collateral vessels.	Hemiplegia, deviated eye and mouth, sluggish speech and sequela of wind stroke.
		Correction on Errors of Medical Works			
	補陽還五湯	醫林改錯			

No.	Formula Name	Reference	Ingredients	Effects	Indications
51	Jheng-Gu-Zih-Jin-Dan (Zheng-Gu-Zi-Jin-Dan) 《Dan》	Yi-Zong-Jin-Jian (Yi-Zong-Jin-Jian)	Caryophylli Flos 2, Aucklandiae Radix 2, Draconis Sanguis 2, Catechu 2, Rhei Radix et Rhizoma Praeparata 2, Carthami Flos 2, Angelicae Sinensis Radix 4, Nelumbinis Sarcocarpium 4, Poria 4, Paeoniae Alba Radix 4, Moutan Radicis Cortex 1, Glycyrrhizae Radix et Rhizoma 0.6. (Daily dosage 29.6 g)	Activate blood to resolve stasis and relieve pain.	Knocks and falls, static blood stagnation.
		Golden Mirror of Medicine			
	正骨紫金丹《丹》	醫宗金鑑	Add honey q.s. to make pills in traditional formula.		
52	Tao-Hong-Sih-Wu-Tang (Tao-Hong-Si-Wu-Tang)	Yi-Zong-Jin-Jian (Yi-Zong-Jin-Jian)	Persicae Semen 5, Carthami Flos 2.5, Angelicae Sinensis Radix 5, Chuanxiong Rhizoma 2.5, Paeoniae Alba Radix 5, Rehmanniae Radix Praeparata 5. (Daily dosage 25 g)	Activate blood to resolve stasis.	Menstrual irregularities, dysmenorrhea and inhibited menstruation with clots.
		Golden Mirror of Medicine			
	桃紅四物湯	醫宗金鑑			
53	Siao-Fong-San (Xiao-Feng-San)	Wai-Ke-Jheng-Zong (Wai-Ke-Zheng-Zong)	Angelicae Sinensis Radix 2.5, Rehmanniae Radix Recens 2.5, Saposhnikoviae Radix 2.5, Cicadae Periostracum 2.5, Anemarrhenae Rhizoma 2.5, Sophorae Flavescentis Radix 2.5, Sesami Nigrum Semen 2.5, Schizonepetae Herba 2.5, Atractylodis Rhizoma 2.5, Arctii Fructus 2.5, Gypsum Fibrosum 2.5, Glycyrrhizae Radix et Rhizoma 1.25, Akebiae Caulis 1.25. (Daily dosage 30 g)	Moisten blood and dispel wind, eliminate dampness and clear heat.	Itchy scabies induced by wind-dampness spreading blood vessels and wind-heat latent syndrome.
		Orthodox Manual of External Disease			
	消風散	外科正宗			
54	Shang-Jhong-Sia-Tong-Yong-Tong-Fong-Wan	Dan-Si-Sin-Fa (Dan-Xi-Xin-Fa)	Arisaematis Rhizoma Preparatum 4, Atractylodis Rhizoma 4, Phellodendri Cortex 4, Chuanxiong	Disperse wind and dispel phlegm, clear heat and dry	Wind-cold and dampness induced by exopathogen with

No.	Formula Name	Reference	Ingredients	Effects	Indications
	(Shang-Zhong-Xia-Tong-Yong-Tong-Feng-Wan)《Wan》	Danxi`s Experiential Therapy	Rhizoma 2, Angelicae Dahuricae Radix 2, Fermentata Medicata Massa 2, Persicae Semen 2, Clematidis Radix et Rhizoma 1, Notopterygii Rhizoma et Radix 1, Stephaniae Tetrandrae Radix 2, Cinnamomi Ramulus 1, Carthami Flos 0.5, Gentianae Radix et Rhizoma 2. (Daily dosage 27.5 g)	dampness, activate blood to relieve pain.	phlegm-heat, inhibited blood vessels, joint pain.
	上中下通用痛風丸《丸》	丹溪心法			
55	Jyuan-Bi-Tang (Juan-Bi-Tang)	Jhong-Guo-Yi-Syue-Da-Cih-Dian (Zhong-Guo-Yi-Xue-Da-Ci-Dian)	Angelicae Sinensis Radix 4, Paeoniae Rubra Radix 4, Astragali Radix 4, Curcumae Longae Rhizoma 4, Notopterygii Rhizoma et Radix 4, Glycyrrhizae Radix et Rhizoma Praeparata cum Melle 1.5, Zingiberis Rhizoma Recens 3, Jujubae Fructus 2, Saposhnikoviae Radix 4. (Daily dosage 30.5 g)	Replenish qi and harmonize the nutrient, dispel wind and eliminate dampness.	Moving impediment, body pain, contracture of the nape and neck, heavy pain of shoulder and elbow, difficulty in moving, cold-impediment of the extremities.
		Chinese Medical Science Dictionary			
	蠲痹湯	中國醫學大辭典			
56	San-Bi-Tang (San-Bi-Tang)	Fu-Ren-Liang-Fang (Fu-Ren-Liang-Fang)	Dipsaci Radix 1.5, Eucommiae Cortex 1.5, Saposhnikoviae Radix 1.5, Cinnamomi Cortex 1.5, Asari Radix et Rhizoma 1.5, Ginseng Radix 1.5, Poria 1.5, Angelicae Sinensis Radix 1.5, Paeoniae Alba Radix 1.5, Astragali Radix 1.5, Cyathulae Radix 1.5, Glycyrrhizae Radix et Rhizoma 1.5, Gentianae Macrophyllae Radix 1.5, Rehmanniae Radix Recens 1.5, Chuanxiong Rhizoma 1.5, Angelicae Pubescentis Radix 1.5, Zingiberis Rhizoma Recnes 1.5, Jujubae Fructus 1.5. (Daily dosage 27 g)	Tonify qi and blood, dispel wind-dampness and resolve painful impediment.	Qi and blood stagnation, spastic extremities and wind-cold dampness impediment.
		Compendium of Effective Prescriptions for Women			
	三痹湯	婦人良方			

No.	Formula Name	Reference	Ingredients	Effects	Indications
57	Du-Huo-Ji-Sheng-Tang (Du-Huo-Ji-Sheng-Tang)	Cian-Jin-Fang (Qian-Jin-Fang)	Angelicae Pubescentis Radix 3, Taxilli Herba 2, Eucommiae Cortex 2, Cyathulae Radix 2, Asari Radix et Rhizoma 2, Gentianae Macrophyllae Radix 2, Poria 2, Cinnamomi Cortex Rasus 2, Saposhnikoviae Radix 2, Chuanxiong Rhizoma 2, Ginseng Radix 2, Glycyrrhizae Radix et Rhizoma 2, Angelicae Sinensis Radix 2, Paeoniae Alba Radix 2, Rehmanniae Radix Recens 2.(Daily dosage 31 g)	Dispel wind-dampness, resolve painful impediment, tonify qi and blood.	Wind-cold dampness impediment, cold pain of lumbar and knees, inhibited bending and stretching of the legs.
		Thousand Gold Prescriptions			
	獨活寄生湯	千金方			
58	Gou-Teng-San (Gou-Teng-San)	Pu-Ji-Ben-Shih-Fang (Pu-Ji-Ben-Shi-Fang)	Uncariae Ramulus Cum Uncis 2, Citri Reticulatae Pericarpium 2, Pinelliae Rhizoma Praeparatum 2, Ophiopogonis Radix 2, Poria 2, Poria cum Pini Radice 2, Ginseng Radix 2, Chrysanthemi Flos 2, Saposhnikoviae Radix 2, Glycyrrhizae Radix et Rhizoma Praeparata cum Melle 1, Gypsum Fibrosum 4, Zingiberis Rhizoma Recens 3. (Daily dosage 26 g)	Dispel wind-phlegm, clear the head and eyes.	Liver syncope, vomiting and dizziness.
		Experiential Prescriptions for Curing All People			
	鈎藤散	普濟本事方			
59	Siao-Syu-Ming-Tang (Xiao-Xu-Ming-Tang)	Yi-Fang-Ji-Jie (Yi-Fang-Ji-Jie)	Ephedrae Herba 2, Cinnamomi Ramulus 2, Glycyrrhizae Radix et Rhizoma 2, Zingiberis Rhizoma Recens 6, Ginseng Radix 2, Chuanxiong Rhizoma 2, Armeniacae Amarum Semen 2, Aconiti Lateralis Radix Preparatum 1, Stephaniae Tetrandrae Radix 2, Paeoniae Alba Radix 2, Scutellariae Radix 2, Saposhnikoviae Radix 3, Jujubae Fructus 1. (Daily dosage 29 g)	Tonify qi and dissipate cold, disperse wind and dispel dampness.	Wind stroke, deviated eye and mouth, contracture of sinews, hemiplegia, stiff tongue inhibits speech or depressed expression.
		Collected Explanation on Prescriptions			
	小續命湯	醫方集解			

No.	Formula Name	Reference	Ingredients	Effects	Indications
60	Wu-Jhu-Yu-Tang (Wu-Zhu-Yu-Tang)	Shang-Han-Lun (Shang-Han-Lun)	Evodiae Fructus 7.5, Ginseng Radix 4.5, Zingiberis Rhizoma Recens 9, Jujubae Fructus 6. (Daily dosage 27 g)	Warm the middle to tonify deficiency, direct qi downward to stop vomiting.	Spleen-stomach deficiency cold, feel nauseated after meals, vomiting and diarrhea, agitation, reversal cold of the extremities, dry retching, salivation and headache.
		Treatise on Febrile Diseases			
	吳茱萸湯	傷寒論			
61	Fu-Zih-Li-Jhong-Tang (Fu-Zi-Li-Zhong-Tang) (Wan)《Wan》	Tai-Ping-Huei-Min-He-Ji-Jyu-Fang (Tai-Ping-Hui-Min-He-Ji-Ju-Fang)	Ginseng Radix 5, Aconiti Lateralis Radix Preparatum 5, Zingiberis Rhizoma Praeparata 5, Glycyrrhizae Radix et Rhizoma Praeparata cum Melle 5, Atractylodis Macrocephalae Rhizoma 5, (Daily dosage 25 g)	Warm the middle to dissipate cold.	Spleen-stomach deficiency cold, indigestion, reversal cold of the limbs, borborygmus and abdominal pain, vomiting and diarrhea.
		Prescription of Peaceful Benevolent Dispensary			
	附子理中湯（丸）《丸》	太平惠民和劑局方	Add honey q.s. to make pills in traditional formula.		
62	Cing-Shu-Yi-Ci-Tang (Qing-Shu-Yi-Qi-Tang)	Pi-Wei-Lun (Pi-Wei-Lun)	Astragali Radix 3, Atractylodis Rhizoma 3, Cimicifugae Rhizoma 3, Ginseng Radix 1.5, Alismatis Rhizoma 1.5, Fermentata Medicata Massa 1.5, Citri Reticulatae Pericarpium 1.5, Atractylodis Macrocephalae Rhizoma 1.5, Ophiopogonis Radix 1, Angelicae Sinensis Radix 1, Glycyrrhizae Radix et Rhizoma Praeparata cum Melle 1, Citri Reticulatae Pericarpium Viride 1, Phellodendri Cortex 1, Puerariae Radix 1, Schisandrae Chinensis Fructus 0.5, Zingiberis Rhizoma Recens 3, Jujubae Fructus 2. (Daily dosage 28 g)	Clear summerheat and eliminate dampness, tonify qi to engender fluid.	Dampness-heat steaming due to the long summer, fatigued limbs, fever and vexation, spontaneous sweating and thirst, yellow stool, hematuria and vacuous pulse.
		Treatise on the Spleen and stomach			
	清暑益氣湯	脾胃論			
63	Jhu-Ye-Shih-Gao-Tang	Shang-Han-Lun	Lophatheri Caulis et Folium 2, Gypsum Fibrosum 16,	Clear heat to engender fluid,	Late stage of febrile disease,

No.	Formula Name	Reference	Ingredients	Effects	Indications
	(Zhu-Ye-Shi-Gao-Tang)	(Shang-Han-Lun)	Pinelliae Rhizoma Praeparatum 4, Ginseng Radix 3, Glycyrrhizae Radix et Rhizoma Praeparata cum Melle 2, Oryzae Semen 6, Ophiopogonis Radix 6. (Daily dosage 39 g)	tonify qi and harmonize the stomach.	dual damage of qi and ying, dry retching, shortage of qi, thirst, vacuous, large and feeble pulse.
		Treatise on Febrile Diseases			
	竹葉石膏湯	傷寒論			
64	Siang-Ru-Yin (Xiang-Ru-Yin)	Tai-Ping-Huei-Min-He-Ji-Jyu-Fang (Tai-Ping-Hui-Min-He-Ji-Ju-Fang)	Moslae Herba 12, Lablab Album Semen 6, Magnoliae Cortex 6. (Daily dosage 24 g)	Dispel summerheat to release the exterior, resolve dampness and harmonize the middle.	Overconsumption of cold foods and drinks in summer, cold induced by exopathogen, dampness induced by internal damage, aversion to cold with fever, heavy-headedness and headache, abdominal pain, vomiting and diarrhea.
		Prescription of Peaceful Benevolent Dispensary			
	香薷飲	太平惠民和劑局方			
65	Wu-Pi-Yin (Wu-Pi-Yin)	Tai-Ping-Huei-Min-He-Ji-Jyu-Fang (Tai-Ping-Hui-Min-He-Ji-Ju-Fang)	Acanthopanacis Cortex 6, Lycii Radicis Cortex 6, Peel of Zingiberis Cortex Recens 6, Arecae Pericarpium 6, Poriae Cutis 6. (Daily dosage 30 g)	Fortify the spleen and resolve dampness, regulate qi and disperse swelling.	Swelling and fullness due to water disease, panting with dyspnea and inhibited urination.
		Prescription of Peaceful Benevolent Dispensary			
	五皮飲	太平惠民和劑局方			
66	Ba-Jheng-San (Ba-Zheng-San)	Tai-Ping-Huei-Min-He-Ji-Jyu-Fang (Tai-Ping-Hui-Min-He-Ji-Ju-Fang)	Plantaginis Semen 3, Dianthi Herba 3, Talcum 3, Rhei Radix et Rhizoma 3, Gardeniae Fructus 3, Polygoni Avicularis Herba 3, Akebiae Caulis 3, Glycyrrhizae	Clear heat and purge fire, induce diuresis and relieve strangury.	Heat accumulating in the bladder and difficult painful urination.

No.	Formula Name	Reference	Ingredients	Effects	Indications
		Prescription of Peaceful Benevolent Dispensary	Radix Tenuis or Glycyrrhizae Radix et Rhizoma 3, Junci Medulla 2. (Daily dosage 26 g)		
	八正散	太平惠民和劑局方			
67	Bi-Sie-Fen-Cing-Yin (Bi-Xie-Fen-Qing-Yin)	Dan-Si-Sin-Fa (Dan-Xi-Xin-Fa)	Alpiniae Oxyphyllae Semen with Shell Removed 6, Dioscoreae Hypoglaucae Rhizoma 6, Acori Graminei Rhizoma 6, Linderae Radix 6, Glycyrrhizae Radix Tenuis or Glycyrrhizae Radix et Rhizoma 3, Poria 3. (Daily dosage 30 g)	Warm the kidney and drain dampness, separate clear and excrete turbid.	Unctuous strangury and white turbidity, frequent urination.
		Danxi`s Experiential Therapy			
	萆薢分清飲	丹溪心法			
68	Yin-Chen-Wu-Ling-San (Yin-Chen-Wu-Ling-San)《San》	Jin-Kuei-Yao-Lyue (Jin-Kui-Yao-Lue)	Artemisiae Scopariae Herba 16, Alismatis Rhizoma 2.5, Polyporus 1.5, Poria 1.5, Atractylodis Macrocephalae Rhizoma 1.5, Cinnamomi Ramulus 1. (Daily dosage 24 g)	Drain dampness and clear heat.	Jaundice, inhibited urination and polydipsia.
		Synopsis of Golden Cabinet			
	茵陳五苓散《散》	金匱要略			
69	Wu-Lin-San (Wu-Lin-San)	Tai-Ping-Huei-Min-He-Ji-Jyu-Fang (Tai-Ping-Hui-Min-He-Ji-Ju-Fang)	Poria Rubra 6, Angelicae Sinensis Radix 4.8, Glycyrrhizae Radix et Rhizoma 4.8, Gardeniae Fructus 4, Paeoniae Rubra Radix 4, Junci Medulla 2. (Daily dosage 25.6 g)	Clear heat and drain dampness, relieve strangury and harmonize the blood.	Five stranguries, deficiency of kidney qi, bladder heat, congesting and dribbling urination, acute pain of umbilicus and abdomen.
		Prescription of Peaceful Benevolent Dispensary			
	五淋散	太平惠民和劑局方			
70	Dao-Shuei-Fu-Ling-Tang (Dao-Shui-Fu-Ling-Tang)	Ci-Siao-Liang-Fang (Qi-Xiao-Liang-Fang)	Poria Rubra 4.8, Ophiopogonis Radix 4.8, Alismatis Rhizoma 4.8, Atractylodis Macrocephalae Rhizoma 4.8, Mori Radicis Cortex 1.6, Perillae Folium 1.6, Arecae Semen 1.6, Chaenomelis Fructus 1.6, Arecae Pericarpium 1.2, Citri Reticulatae Pericarpium 1.2,	Move qi and resolve dampness, induce diuresis to alleviate edema.	Edema of the whole body, panting in semireclining position, inability to lay flat, poor appetite, astringentl urination.
		Effective Prescriptions			
	導水茯苓湯	奇效良方			

No.	Formula Name	Reference	Ingredients	Effects	Indications
			Amomi Fructus 1.2, Aucklandiae Radix 1.2, Junci Medulla 1. (Daily dosage 31.4 g)		
71	Mu-Fang-Ji-Tang (Mu-Fang-Ji-Tang) 木防己湯	Jin-Kuei-Yao-Lyue (Jin-Kui-Yao-Lue) Synopsis of Golden Cabinet 金匱要略	Cocculi orbiculati Radix 6, Gypsum Fibrosum 12, Cinnamomi Ramulus 4, Ginseng Radix 8. (Daily dosage 30 g)	Settle the inverse-asthenia, disperse thoracic fluid retention.	Tthoracic fluid retention in diaphragm, panting, stuffiness and rigidity below the heart.
72	Ji-Ming-San (Ji-Ming-San) 雞鳴散	Jheng-Jhih-Jhun-Sheng (Zheng-Zhi-Zhun-Sheng) Standards for Diagnosis and Treatment 證治準繩	Arecae Semen 8, Citri Reticulatae Pericarpium 5, Chaenomelis Fructus 5, Evodiae Fructus 1.5, Perillae Folium 1.5, Platycodi Radix 2.5, Zingiberis Rhizoma Recens 2.5. (Daily dosage 26 g)	Warm diffusion and downbearing the turbid.	Beriberi pain, deep multiple abscess with wind-dampnes, foot pain and sinews edema.
73	Jhih-Gan-Cao-Tang (Zhi-Gan-Cao-Tang) 炙甘草湯	Shang-Han-Lun (Shang-Han-Lun) Treatise on Febrile Diseases 傷寒論	Glycyrrhizae Radix et Rhizoma Praeparata cum Melle 3, Zingiberis Rhizoma Recens 2.5, Cinnamomi Ramulus 2.5, Ginseng Radix 1.5, Rehmanniae Radix Recens 12, Asini Corii Colla 1.5, Ophiopogonis Radix 2.5, Cannabis Fructus 3, Jujubae Fructus 3. (Daily dosage 31.5 g)	Tonify qi and blood, enrich yin and rehabilitate vessel.	Deficiency of qi and blood, bound pulse, palpitations, shortness of breath, oppression in the chest, consumptive disease and lung atrophy.
74	Cing-Zao-Jiou-Fei-Tang (Qing-Zao-Jiu-Fei-Tang) 清燥救肺湯	Yi-Zong-Jin-Jian (Yi-Zong-Jin-Jian) Golden Mirror of Medicine 醫宗金鑑	Mori Folium 7.5, Gypsum Fibrosum 6.5, Glycyrrhizae Radix et Rhizoma 2.5, Sesami Nigrum Semen 2.5, Asini Corii Colla 2, Ginseng Radix 2, Ophiopogonis Radix 3, Armeniacae Amarum Semen 2, Eriobotryae Folium 2. (Daily dosage 30 g)	Clear dryness to moisten the lung.	Dryness invading the lung, headache and fever, dry cough without phlegm, qi counterflow and panting, thirst and vexation.

No.	Formula Name	Reference	Ingredients	Effects	Indications
75	Gan-Lu-Yin (Gan-Lu-Yin)	Tai-Ping-Huei-Min-He-Ji-Jyu-Fang (Tai-Ping-Hui-Min-He-Ji-Ju-Fang)	Rehmanniae Radix Praeparata 2.5, Ophiopogonis Radix 2.5, Citri Immaturus Fructus 2.5, Glycyrrhizae Radix et Rhizoma Praeparata cum Melle 2.5, Artemisiae Scopariae Herba 2.5, Eriobotryae Folium 2.5, Dendrobii Caulis 2.5, Scutellariae Radix 2.5, Rehmanniae Radix Recens 2.5, Asparagi Radix 2.5. (Daily dosage 25 g)	Nourish yin and clear dampness-heat.	Dampness-heat of stomach meridian, fetid mouth odor and sore throat, mouth and tongue sores, gum atrophy and swollen gums.
		Prescription of Peaceful Benevolent Dispensary			
	甘露飲	太平惠民和劑局方			
76	Huang-Lian-Jie-Du-Tang (Huang-Lian-Jie-Du-Tang)	Wai-Tai-Mi-Yao (Wai-Tai-Mi-Yao)	Coptidis Rhizoma 6, Scutellariae Radix 6, Phellodendri Cortex 6, Gardeniae Fructus 6. (Daily dosage 24 g)	Clear heat and detoxicate.	Dry mouth and throat, reddish painful urination, constipation and all the fire-heat syndrome.
		The Medical Secrets of an Official			
	黃連解毒湯	外台秘要			
77	Bai-Hu-Tang (Bai-Hu-Tang)	Shang-Han-Lun (Shang-Han-Lun)	Anemarrhenae Rhizoma 6, Gypsum Fibrosum 16, Glycyrrhizae Radix et Rhizoma Praeparata cum Melle 2, Oryzae Semen 8. (Daily dosage 32 g)	Clear heat to engender fluid.	Yang brightness meridian syndrome or qi aspect heat of warm disease, manifested as thrist, fever, large and surging pulse, great sweating.
		Treatise on Febrile Diseases			
	白虎湯	傷寒論			
78	Liang-Ge-San (Liang-Ge-San0	Tai-Ping-Huei-Min-He-Ji-Jyu-Fang (Tai-Ping-Hui-Min-He-Ji-Ju-Fang)	Rhei Radix et Rhizoma 4, Natrii Sulfas 4, Glycyrrhizae Radix et Rhizoma 4, Forsythiae Fructus 8, Gardeniae Fructus 2, Scutellariae Radix 2, Menthae Herba 2, Lophatheri Caulis et Folium 2. (Daily dosage 28 g)	Clear heat and detoxicate, purge fire to relax the bowels.	Accumulated heat in viscera and bowels, agitation and thirst, mouth and tongue sores, swelling and painful throat, constipation and reddish urine.
		Prescription of Peaceful Benevolent Dispensary			
	涼膈散	太平惠民和劑局方			

No.	Formula Name	Reference	Ingredients	Effects	Indications
79	Long-Dan-Sie-Gan-Tang (Long-Dan-Xie-Gan-Tang) (Wan)《Wan》	Li-Dong-Yuan-Fang (Li-Dong-Yuan-Fang)	Gentianae Radix et Rhizoma 4, Scutellariae Radix 2, Gardeniae Fructus 2, Alismatis Rhizoma 4, Akebiae Caulis 2, Plantaginis Semen 2, Angelicae Sinensis Radix 2, Rehmanniae Radix Recens 2, Bupleuri Radix 4, Glycyrrhizae Radix et Rhizoma 2. (Daily dosage 26 g)	Purge liver fire and drain dampness-heat.	Accumulated heat in viscera and bowels, tinnitus and deafness, ear swelling and pain, inhibited urination.
		Dong-Yuan Li's Prescriptions			
	龍膽瀉肝湯（丸）《丸》	李東垣方			
80	Cing-Wei-San (Qing-Wei-San)	Lan-Shih-Mi-Cang (Lan-Shi-Mi-Cang)	Angelicae Sinensis Radix 3.6, Coptidis Rhizoma 3.6, Rehmanniae Radix Recens 3.6, Moutan Radicis Cortex 6, Cimicifugae Rhizoma 12. (Daily dosage 28.8 g)	Clear stomach fire and cool blood-heat.	Toothache, facial heat, swelling and painful lips, mouth and cheeks with sores, bleeding gum atrophy and ulcerating sore gums induced by stomach fire.
		Medical Works Secretly Kept in Imperial Library			
	清胃散	蘭室秘藏			
81	Gan-Lu-Siao-Du-Dan (Gan-Lu-Xiao-Du-Dan)《Dan》	Yi-Siao-Mi-Chuan (Yi-Xiao-Mi-Chuan)	Talcum 6, Scutellariae Radix 4, Artemisiae Scopariae Herba 4.4, Pogostemonis Herba 1.6, Forsythiae Fructus 1.6, Acori Graminei Rhizoma 2.4, Amomi Rotundus Fructus 1.6, Menthae Herba 1.6, Akebiae Caulis 2, Belamcandae Rhizoma 1.6, Fritillariae Cirrhosae Bulbus 2. (Daily dosage 28.8 g)	Resolve turbidity and drain dampness, Clear heat and detoxicate.	Summerheat-dampness, seasonal epidemic and heat fatigue, oppression in the chest and abdominal distention, swelling throat and thirst, hematuria and difficult urination.
		Effective Secret Formula			
	甘露消毒丹《丹》	醫效秘傳			
82	Cing-Sin-Lian-Zih-Yin (Qing-Xin-Lian-Zi-Yin)	Tai-Ping-Huei-Min-He-Ji-Jyu-Fang (Tai-Ping-Hui-Min-He-Ji-Ju-Fang)	Nelumbinis Fructus 4.5, Poria 4.5, Astragali Radix 4.5, Ginseng Radix 4.5, Ophiopogonis Radix 3, Lycii Radicis Cortex 3, Scutellariae Radix 3, Glycyrrhizae Radix et Rhizoma Praeparata cum Melle 3, Plantaginis Semen 3. (Daily dosage 33 g)	Clear heart fire, tonify qi and yin.	Upper excess and lower deficiency, heart fire flaming upward, bitter taste in the mouth and dry throat, bladder dampness-heat, seminal
		Prescription of Peaceful Benevolent Dispensary			

No.	Formula Name	Reference	Ingredients	Effects	Indications
	清心蓮子飲	太平惠民和劑局方			emission turbid and dripping.
83	Dao-Chih-San (Dao-Chi-San)	Siao-Er-Yao-Jheng-Jhih-Jyue (Xiao-Er-Yao-Zheng-Zhi-Jue)	Rehmanniae Radix Recens 6, Glycyrrhizae Radix et Rhizoma 6, Akebiae Caulis 6, Lophatheri Caulis et Folium 6. (Daily dosage 24 g)	Clear heart fire and drain urination.	Oral erosion and tongue sore, reddish painful urination, inhibited heat strangury.
		Key to Therapeutics of Childen's Diseases			
	導赤散	小兒藥證直訣			
84	Yu-Nyu-Jian (Yu-Nu-Jian)	Jing-Yue-Cyuan-Shu (Jing-Yue-Quan-Shu)	Gypsum Fibrosum Crudum 10, Rehmanniae Radix Praeparata 10, Ophiopogonis Radix 5, Anemarrhenae Rhizoma 4, Achyranthis Bidentatae Radix 4. (Daily dosage 33 g)	Clear stomach and nourish yin.	Yin deficiency and stomach heat, vexing heat and thirst, headache and toothache.
		Complete Works of Jingyue			
	玉女煎	景岳全書			
85	Jing-Jie-Lian-Ciao-Tang (Jing-Jie-Lian-Qiao-Tang)	Shen-Shih-Zun-Sheng-Shu (Shen-Shi-Zun-Sheng-Shu)	Angelicae Sinensis Radix 2, Paeoniae Alba Radix 2, Chuanxiong Rhizoma 2, Scutellariae Radix 2, Gardeniae Fructus 2, Forsythiae Fructus 2, Schizonepetae Herba 2, Saposhnikoviae Radix 2, Citri Immaturus Fructus 2, Glycyrrhizae Radix et Rhizoma 1.5, Angelicae Dahuricae Radix 2, Platycodi Radix 2, Bupleuri Radix 2. (Daily dosage 25.5 g)	Clear heat and detoxicate.	Wind-heat, ear swelling and pain.
		Shen's Health Keeping			
	荊芥連翹湯	沈氏尊生書			
86	Zih-Yin-Jiang-Huo-Tang (Zi-Yin-Jiang-Huo-Tang)	Shen-Shih-Zun-Sheng-Shu (Shen-Shi-Zun-Sheng-Shu)	Paeoniae Alba Radix 2.5, Angelicae Sinensis Radix 2.5, Rehmanniae Radix Praeparata 2, Atractylodis Macrocephalae Rhizoma 2, Asparagi Radix 2, Ophiopogonis Radix 2, Rehmanniae Radix Recens 1.5, Citri Reticulatae Pericarpium 1.5, Anemarrhenae Rhizoma 1, Phellodendri Cortex 1, Glycyrrhizae Radix et Rhizoma Praeparata cum Melle 1, Zingiberis	Nourish yin and downbear fire.	Yin deficiency with fever, cough with phlegm, rapid panting, night weating and dry mouth.
		Shen's Health Keeping			
	滋陰降火湯	沈氏尊生書			

No.	Formula Name	Reference	Ingredients	Effects	Indications
			Rhizoma Recens 3, Jujubae Fructus 2. (Daily dosage 24 g)		
87	Dang-Guei-Long-Huei-Wan-Cyu-She-Siang (Dang-Gui-Long-Hui-Wan-Qu-She-Xian) 《Wan》	Dan-Si-Sin-Fa (Dan-Xi-Xin-Fa)	Angelicae Sinensis Radix 3, Gentianae Radix et Rhizoma 3, Aloe 1.5, Gardeniae Fructus 3, Coptidis Rhizoma 3, Scutellariae Radix 3, Phellodendri Cortex 3, Rhei Radix et Rhizoma 1.5, Aucklandiae Radix 0.75, Naturalis Indigo 1.5, ~~Moschus 0.15~~. (Daily dosage 23.25 g)	Purge excess liver and spleen fire, relax the bowels.	Liver-gallbladder with fire effulgence, disquieted fright palpitations and constipation.
		Danxi`s Experiential Therapy			
	當歸龍薈丸去麝香《丸》	丹溪心法			
88	Sin-Yi-Cing-Fei-Tang (Xin-Yi-Qing-Fei-Tang)	Wai-Ke-Jheng-Zong (Wai-Ke-Zheng-Zong)	Magnoliae Flos 2, Scutellariae Radix 3, Gardeniae Fructus 3, Ophiopogonis Radix 3, Lilii Bulbus 3, Gypsum Fibrosum 3, Anemarrhenae Rhizoma 3, Glycyrrhizae Radix et Rhizoma 1.5, Eriobotryae Folium 3, Cimicifugae Rhizoma 1. (Daily dosage 25.5 g)	Clear lung heat.	Nasal congestion and nasal polyp.
		Orthodox Manual of External Disease			
	辛夷清肺湯	外科正宗			
89	Hua-Gai-San (Hua-Gai-San)	Tai-Ping-Huei-Min-He-Ji-Jyu-Fang (Tai-Ping-Hui-Min-He-Ji-Ju-Fang)	Ephedrae Herba 4, Perillae Fructus 4, Mori Radicis Cortex 4, Armeniacae Amarum Semen 4, Poria Rubra 4, Citri Reticulatae Pericarpium 4, Glycyrrhizae Radix et Rhizoma 2. (Daily dosage 26 g)	Diffuse the lung to calm panting, suppress cough and resolve phlegm.	Lung with pathogenic cold, cough with dyspnea, vexation and stuffiness in the chest and diaphragm, dizzy vision.
		Prescription of Peaceful Benevolent Dispensary			
	華蓋散	太平惠民和劑局方			

No.	Formula Name	Reference	Ingredients	Effects	Indications
90	Cing-Fei-Tang (Qing-Fei-Tang) 清肺湯	Zeng-Bu-Wan-Bing-Huei-Chun (Zeng-Bu-Wan-Bing-Hui-Chun) Supplement of Recovery from All Ailments 增補萬病回春	Glycyrrhizae Radix et Rhizoma 0.6, Scutellariae Radix 3, Platycodi Radix 2, Poria 2, Citri Reticulatae Pericarpium 2, Angelicae Sinensis Radix 2, Fritillariae Cirrhosae Bulbus 2, Mori Radicis Cortex 2, Asparagi Radix 1.5, Gardeniae Fructus 1.5, Armeniacae Amarum Semen 1.5, Ophiopogonis Radix 1.5, Schisandrae Chinensis Fructus 0.4, Zingiberis Rhizoma Recens 3, Jujubae Fructus 2, Bambusae Caulis In Taenia 2. (Daily dosage 29 g)	Clear liver, resolve phlegm and suppress cough.	Cough and upper energizer with copious phlegm.
91	Jhih-Sou-San (Zhi-Sou-San)《San》 止嗽散《散》	Yi-Syue-Sin-Wu (Yi-Xue-Xin-Wu) Medicine Comprehended 醫學心悟	Platycodi Radix 5, Schizonepetae Herba 5, Asteris Radix et Rhizoma 5, Stemonae Radix 5, Cynanchi Stauntonii Rhizoma et Radix 5, Glycyrrhizae Radix et Rhizoma 2, Citri Reticulatae Pericarpium 2.5. (Daily dosage 29.5 g)	Disperse wind to release the exterior, resolve phlegm and suppress cough.	Cough induced by exopathogen and inhibited expectoration.
92	Jin-Fei-Cao-San (Jin-Fei-Cao-San) 金沸草散	Tai-Ping-Huei-Min-He-Ji-Jyu-Fang (Tai-Ping-Hui-Min-He-Ji-Ju-Fang) Prescription of Peaceful Benevolent Dispensary 太平惠民和劑局方	Schizonepetae Herba 6, Peucedani Radix 4.5, Ephedrae Herba 4.5, Inulae Flos 4.5, Glycyrrhizae Radix et Rhizoma 1.5, Pinelliae Rhizoma Praeparatum 1.5, Paeoniae Rubra Radix 1.5, Zingiberis Rhizoma Recens 3, Jujubae Fructus 1. (Daily dosage 28 g)	Release the exterior to dissipate cold, dispel wind and resolve phlegm.	Lung with wind-cold and cough with copious phlegm.
93	Siang-Sha-Liou-Jyun-Zih-Tang (Xiang-Sha-Liu-Jun-Zi-Tang)	Shan-Bu-Ming-Yi-Fang-Lun (Shan-Bu-Ming-Yi-Fang-Lun) Revised Famous Doctor's Prescription	Ginseng Radix 2.5, Atractylodis Macrocephalae Rhizoma 5, Poria 5, Glycyrrhizae Radix et Rhizoma 2, Citri Reticulatae Pericarpium 2, Pinelliae Rhizoma Praeparatum 2.5, Amomi Fructus 2, Aucklandiae	Fortify the spleen and nourish the stomach.	Qi deficiency and phlegm-retained fluid, stuffiness and oppression in vomiting, abdominal

No.	Formula Name	Reference	Ingredients	Effects	Indications
	香砂六君子湯	刪補名醫方論	Radix 2, Zingiberis Rhizoma Recens 5. (Daily dosage 28 g)		distention.
94	Jhih-Jhuo-Gu-Ben-Wan (Zhi-Zhuo-Gu-Ben-Wan) 《Wan》	Yi-Syue-Jheng-Jhuan (Yi-Xue-Zheng-Zhuan)	Nelumbinis Stamen 4, Coptidis Rhizoma 4, Poria 2, Amomi Fructus 2, Alpiniae Oxyphyllae Semen with Shell Removed 2, Pinelliae Rhizoma Praeparatum 2, Phellodendri Cortex 2, Glycyrrhizae Radix et Rhizoma Praeparata cum Melle 6, Polyporus 5. (Daily dosage 29 g)	Clear heat and drain dampness.	Lower energizer dampness-heat, frequent urination and white turbidity.
		Orthodox Transmission of Medicine			
	治濁固本丸《丸》	醫學正傳			
95	Dang-Guei-Liou-Huang-Tang (Dang-Gui-Liu-Huang-Tang)	Lan-Shih-Mi-Cang (Lan-Shi-Mi-Cang)	Angelicae Sinensis Radix 3.5, Rehmanniae Radix Recens 3.5, Rehmanniae Radix Praeparata 3.5, Phellodendri Cortex 3.5, Scutellariae Radix 3.5, Coptidis Rhizoma 3.5, Astragali Radix 7. (Daily dosage 28 g)	Nourish yin and clear heat, secure the exterior to stop sweating.	Yin deficiency with fire, night sweating and fever.
		Medical Works Secretly Kept in Imperial Library			
	當歸六黃湯	蘭室秘藏			
96	San-Jhong-Kuei-Jian-Tang (San-Zhong-Kui-Jian-Tang)	Lan-Shih-Mi-Cang (Lan-Shi-Mi-Cang)	Scutellariae Radix 4, Gentianae Radix et Rhizoma 2.5, Trichosanthis Radix 2.5, Phellodendri Cortex 4, Anemarrhenae Rhizoma 2.5, Platycodi Radix 2.5, Eckloniae Thallus 2.5, Bupleuri Radix 2.5, Glycyrrhizae Radix et Rhizoma Praeparata cum Melle 1.5, Sparganii Rhizoma 1.5, Curcumae Rhizoma 1.5, Forsythiae Fructus 1.5, Puerariae Radix 1.5, Paeoniae Alba Radix 1, Rootlet of Angelicae Sinensis Radix 1, Coptidis Rhizoma 1, Cimicifugae Rhizoma 0.5. (Daily dosage 34 g)	Clear heat and detoxicate, break accumulation and promote rupture.	Scrofula and subcutaneous node.
		Medical Works Secretly Kept in Imperial Library			
	散腫潰堅湯	蘭室秘藏			

No.	Formula Name	Reference	Ingredients	Effects	Indications
97	Pai-Nong-San (Pai-Nong-San) 《San》 排膿散《散》	Jin-Kuei-Yao-Lyue (Jin-Kui-Yao-Lue) Synopsis of Golden Cabinet 金匱要略	Aurantii Immaturus Fructus 18, Paeoniae Alba Radix 6, Platycodi Radix 2. (Daily dosage 26 g)	Expel pus to relieve pain.	Stool with internal abscess and pus.
98	Ru-Yi-Jin-Huang-San (Ru-Yi-Jin-Huang-San) 如意金黃散(Only for traditional formula.)	Wai-Ke-Jheng-Zong (Wai-Ke-Zheng-Zong) Orthodox Manual of External Disease 外科正宗	Trichosanthis Radix 25, Phellodendri Cortex 12.5, Rhei Radix et Rhizoma 12.5, Curcumae Longae Rhizoma 12.5, Angelicae Dahuricae Radix 12.5, Magnoliae Cortex 5, Citri Reticulatae Pericarpium 5, Glycyrrhizae Radix et Rhizoma 5, Atractylodis Rhizoma 5, Arisaematis Rhizoma Recens 5 (Apply adequately.)	Disperse swelling, detoxicate and relieve pain.	Abscess and ulcer, swelling boil, acute mastitis, erysipelas, lacquer dermatitis, scald, knocks and falls.
99	Wan-Dai-Tang (Wan-Dai-Tang) 完帶湯	Fu-Cing-Jhu-Nyu-Ke (Fu-Qing-Zhu-Nu-Ke) Fu Qingzhu's Gynecology and Obstetrics 傅青主女科	Atractylodis Macrocephalae Rhizoma 10, Dioscoreae Rhizoma 10, Ginseng Radix 2, Paeoniae Alba Radix 5, Plantaginis Semen 3, Atractylodis Rhizoma 3, Glycyrrhizae Radix et Rhizoma 1, Citri Reticulatae Pericarpium 0.5, Schizonepetae Herba Carbonisata 0.5, Bupleuri Radix 0.6. (Daily dosage 35.6 g)	Dry dampness to fortify the spleen, soothe the liver and regulate qi.	White vaginal discharge.
100	Tiao-Jing-Wan (Tiao-Jing-Wan) 《Wan》	Liou-Ke-Jhun-Sheng (Liu-Ke-Zhun-Sheng) Standards for Diagnosis and Treatment	Cyperi Rhizoma 4, Eucommiae Cortex 4, Chuanxiong Rhizoma 2, Paeoniae Alba Radix 2, Angelicae Sinensis Radix 2, Rehmanniae Radix Recens 2, Citri Reticulatae Pericarpium 2, Foeniculi Fructus 2, Corydalis Rhizoma 2, Cistanches Herba 2, Citri Reticulatae Pericarpium Viride 2, Linderae Radix 2, Scutellariae Radix 2, Sepiae Endoconcha 2. (Daily	Activate blood to regulate menstruation, move qi to relieve pain.	Menstrual irregularities, dysmenorrhea, postpartum static blood and abdominal pain.

No.	Formula Name	Reference	Ingredients	Effects	Indications
			dosage 32 g)		
	調經丸《丸》	六科準繩	Add vinegar and flour q.s. to make pills in traditional formula.		
101	Sheng-Yu-Tang (Sheng-Yu-Tang)	Yi-Zong-Jin-Jian (Yi-Zong-Jin-Jian)	Rehmanniae Radix Praeparata 5, Chuanxiong Rhizoma 2.5, Ginseng Radix 5, Angelicae Sinensis Radix 2.5, Astragali Radix 5, Paeoniae Alba Radix 5. (Daily dosage 25 g)	Tonify qi and blood.	Dual deficiency of qi and blood, polydipsia and dryness-heat, insomnia, fatigue and poor appetite.
		Golden Mirror of Medicine			
	聖愈湯	醫宗金鑑			
102	Shih-Shen-Tang (Shi-Shen-Tang)	Tai-Ping-Huei-Min-He-Ji-Jyu-Fang (Tai-Ping-Hui-Min-He-Ji-Ju-Fang)	Citri Reticulatae Pericarpium 2, Ephedrae Herba 2, Chuanxiong Rhizoma 2, Glycyrrhizae Radix et Rhizoma Praeparata cum Melle 2, Cyperi Rhizoma 2, Perillae Folium 2, Angelicae Dahuricae Radix 2, Cimicifugae Rhizoma 2, Puerariae Radix 7, Paeoniae Rubra Radix 2, Zingiberis Rhizoma Recens 3. (Daily dosage 28 g)	Release the flesh to effuse exterior, regulate qi and free yang.	Common cold and wind-cold, aversion to cold with fever, headache without sweating, cough and nasal congestion.
		Prescription of Peaceful Benevolent Dispensary			
	十神湯	太平惠民和劑局方			
103	Sheng-Ma-Ge-Gen-Tang (Sheng-Ma-Ge-Gen-Tang) 《San》	Yi-Fang-Ji-Jie (Yi-Fang-Ji-Jie)	Puerariae Radix 6, Cimicifugae Rhizoma 9, Paeoniae Alba Radix 6, Glycyrrhizae Radix et Rhizoma 3, Zingiberis Rhizoma Recens 3. (Daily dosage 27 g)	Release the flesh to outthrust rashes, release smallpox heat toxin.	The initial stage or onset but not thorough of measles, aversion to wind with fever, sneezing and cough.
		Collected Explanation on Prescriptions			
	升麻葛根湯《散》	醫方集解	Without Zingiberis Rhizoma Recens in traditional formula.		
104	Sin-Yi-San (Xin-Yi-San) 《San》	Yi-Fang-Ji-Jie (Yi-Fang-Ji-Jie)	Magnoliae Flos 2.5, Asari Radix et Rhizoma 2.5, Ligustici Rhizoma et Radix 2.5, Cimicifugae Rhizoma 2.5, Chuanxiong Rhizoma 2.5, Akebiae Caulis 2.5, Saposhnikoviae Radix 2.5, Glycyrrhizae Radix et	Disperse wind-cold, dispel dampness pathogen and relieve the stuffy nose.	Nasal congestion induced by the initial stage of common cold, watery nasal mucus.
		Collected Explanation on Prescriptions			

No.	Formula Name	Reference	Ingredients	Effects	Indications
	辛夷散《散》	醫方集解	Rhizoma 2.5, Angelicae Dahuricae Radix 2.5, Camelliae Sinensis Folium 2.5. (Daily dosage 25 g)		
105	Siao-Cheng-Ci-Tang (Xiao-Cheng-Qi-Tang)	Shang-Han-Lun (Shang-Han-Lun)	Rhei Radix et Rhizoma 14, Magnoliae Cortex 7, Aurantii Immaturus Fructus 7. (Daily dosage 28 g)	Discharge heat to relax the bowels, eliminate stuffiness and remove food stagnations.	Yang brightness excess heat, abdominal fullness and constipation.
		Treatise on Febrile Diseases			
	小承氣湯	傷寒論			
106	Tiao-Wei-Cheng-Ci-Tang (Tiao-Wei-Cheng-Qi-Tang)	Shang-Han-Lun (Shang-Han-Lun)	Rhei Radix et Rhizoma 8, Glycyrrhizae Radix et Rhizoma Praeparata cum Melle 4, Natrii Sulfas 16. (Daily dosage 28 g)	Soften hardness to relax the bowels, harmonize the stomach and discharge heat.	Yang brightness heat bind, thirst and vexation, abdominal fullness and constipation.
		Treatise on Febrile Diseases			
	調胃承氣湯	傷寒論			
107	Tao-Ren-Cheng-Ci-Tang (Tao-Ren-Cheng-Qi-Tang) Tao-He-Cheng-Ci-Tang (Tao-He-Cheng-Qi-Tang)	Shang-Han-Lun (Shang-Han-Lun)	Persicae Semen praeparatum 5, Cinnamomi Ramulus 5, Rhei Radix et Rhizoma 10, Natrii Sulfas 5, Glycyrrhizae Radix et Rhizoma Praeparata cum Melle 5. (Daily dosage 30 g)	Relax the bowels and dissipate stasis.	Blood amass in lower energizer, lower abdomen cramp, spontaneous urination, blood stasis and amenorrhea.
		Treatise on Febrile Diseases			
	桃仁承氣湯 (桃核承氣湯)	傷寒論			
108	Da-Chai-Hu-Tang (Da-Chai-Hu-Tang)	Shang-Han-Lun (Shang-Han-Lun)	Bupleuri Radix 8, Scutellariae Radix 3, Paeoniae Alba Radix 3, Pinelliae Rhizoma Praeparatum 5, Zingiberis Rhizoma Recens 5, Aurantii Immaturus Fructus 2, Jujubae Fructus 2, Rhei Radix et Rhizoma 2. (Daily dosage 30 g)	Harmonize and release the lesser yang, Drastic (purgative) heat-accumulation.	Cold damage entering yang brightness, incompletely release the lesser yang disease, alternating chills and fever, stuffiness and fullness below the heart, persistent vomiting, vexation and constipation.
		Treatise on Febrile Diseases			
	大柴胡湯	傷寒論			

No.	Formula Name	Reference	Ingredients	Effects	Indications
109	Fang-Fong-Tong-Sheng-San (Fang-Feng-Tong-Sheng-San) 《San》	Yi-Fang-Ji-Jie (Yi-Fang-Ji-Jie)	Saposhnikoviae Radix 1, Schizonepetae Herba 1, Forsythiae Fructus 1, Ephedrae Herba 1, Menthae Herba 1, Chuanxiong Rhizoma 1, Angelicae Sinensis Radix 1, Paeoniae Alba Radix 1, Atractylodis Macrocephalae Rhizoma 1, Gardeniae Fructus 1, Rhei Radix et Rhizoma 1, Natrii Sulfas 1, Scutellariae Radix 2, Gypsum Fibrosum 2, Platycodi Radix 2, Glycyrrhizae Radix et Rhizoma 4, Talcum 6, Zingiberis Rhizoma Recens 2, Allii Fistulosi Bulbus Recens 2. (Daily dosage 32 g)	Release the exterior and relieve interior, disperse wind to clear heat.	All excess of the exterior, interior and triple energizers, constipation, short and reddish urine, sore and ulcer, swelling toxin.
		Collected Explanation on Prescriptions			
	防風通聖散《散》	醫方集解	Without Zingiberis Rhizoma Recens and Allii Fistulosi Bulbus Recens to make fine powder in traditional formula.		
110	Ge-Gen-Huang-Cin-Huang-Lian-Tang (Ge-Gen-Huang-Qin-Huang-Lian-Tang)	Shang-Han-Lun (Shang-Han-Lun)	Puerariae Radix 12, Glycyrrhizae Radix et Rhizoma Praeparata cum Melle 3, Scutellariae Radix 4.5, Coptidis Rhizoma 4.5. (Daily dosage 24 g)	Clear heat to release the exterior.	Exterior syndrome unsolved, heat pathogen entering the interior, fever and diarrhea, vexing heat in the chest and stomach, panting with sweating.
		Treatise on Febrile Diseases			
	葛根黃芩黃連湯	傷寒論			
111	Sang-Jyu-Yin (Sang-Ju-Yin)	Wun-Bing-Tiao-Bian (Wen-Bing-Tiao-Bian)	Armeniacae Amarum Semen praeparatum 5, Forsythiae Fructus 4, Menthae Herba 2, Mori Folium 6, Chrysanthemi Flos 2.5, Platycodi Radix 5, Glycyrrhizae Radix et Rhizoma 2, Phragmitis Rhizoma 5. (Daily dosage 31.5 g)	Disperse wind to clear heat, diffuse the lung to suppress cough.	The initial stage of wind-warmth, cough, fever and thirst.
		Differentiation and Treatment of Epidemic Febrile Diseases			
	桑菊飲	溫病條辨			

No.	Formula Name	Reference	Ingredients	Effects	Indications
112	Sing-Su-San (Xing-Su-San)	Wun-Bing-Tiao-Bian (Wen-Bing-Tiao-Bian)	Perillae Folium 3, Pinelliae Rhizoma Praeparatum 3, Poria 3, Peucedani Radix 2, Platycodi Radix 2, Citri Immaturus Fructus 2 Glycyrrhizae Radix et Rhizoma 1, Zingiberis Rhizoma Recens 2, Jujubae Fructus 2, Citri Reticulatae Pericarpium recens 1, Armeniacae Amarum Semen praeparatum 3. (Daily dosage 24 g)	Warm and disperse wind-cold, diffuse the lung to resolve phlegm.	Common cold, fever, headache and cough with phlegm.
		Differentiation and Treatment of Epidemic Febrile Diseases			
	杏蘇散	溫病條辨			
113	Yin-Ciao-San (Yin-Qiao-San)	Wun-Bing-Tiao-Bian (Wen-Bing-Tiao-Bian)	Forsythiae Fructus 5, Lonicerae Flos 5, Platycodi Radix 3, Menthae Herba 3, Lophatheri Caulis et Folium 2, Glycyrrhizae Radix et Rhizoma 2.5, Schizonepetae Herba 2, Sojae Semen Preparatum 2.5, Arctii Fructus 3, Phragmitis Rhizoma 2. (Daily dosage 30 g)	Outthrust through the exterior with pungent-cool, clear heat and detoxicate.	The initial stage of warm disease, slight aversion to wind-cold with fever, headache and thirst, cough and sore throat.
		Differentiation and Treatment of Epidemic Febrile Diseases			
	銀翹散	溫病條辨			
114	Chai-Hu-Guei-Jhih-Tang (Chai-Hu-Gui-Zhi-Tang)	Shang-Han-Lun (Shang-Han-Lun)	Cinnamomi Ramulus 3, Scutellariae Radix 3, Ginseng Radix 3, Glycyrrhizae Radix et Rhizoma Praeparata cum Melle 2, Pinelliae Rhizoma Praeparatum 5, Paeoniae Alba Radix 3, Jujubae Fructus 2, Zingiberis Rhizoma Recens 3, Bupleuri Radix 8. (Daily dosage 32 g)	Release both the exterior and interior.	Both lesser yang syndrome and greater yang exterior syndrome, fever, slight aversion to cold, painful limb joints, slight vomiting, tightness below the heart.
		Treatise on Febrile Diseases			
	柴胡桂枝湯	傷寒論			
115	Siao-Chai-Hu-Tang (Xiao-Chai-Hu-Tang)	Shang-Han-Lun (Shang-Han-Lun)	Bupleuri Radix 8, Scutellariae Radix 3, Ginseng Radix 3, Glycyrrhizae Radix et Rhizoma Praeparata cum Melle 3, Pinelliae Rhizoma Praeparatum 5, Zingiberis Rhizoma Recens 3, Jujubae Fructus 2. (Daily dosage 27 g)	Harmonize and release the lesser yang.	Lesser yang syndrome, alternating chills and fever, fullness in the chest and hypochondrium, poor appetite, vexation and feel nauseated, bitter taste in the mouth, dry
		Treatise on Febrile Diseases			
	小柴胡湯	傷寒論			

No.	Formula Name	Reference	Ingredients	Effects	Indications
					throat and dizzy vision.
116	Shao-Yao-Gan-Cao-Tang (Shao-Yao-Gan-Cao-Tang) 芍藥甘草湯	Shang-Han-Lun (Shang-Han-Lun) Treatise on Febrile Diseases 傷寒論	Paeoniae Alba Radix 12, Glycyrrhizae Radix et Rhizoma Praeparata cum Melle 12. (Daily dosage 24 g)	Relax tension to relieve pain.	Abdominal pain and foot spasm.
117	Chai-Sian-Tang (Chai-Xian-Tang) 柴陷湯	Shen-Shih-Zun-Sheng-Shu (Shen-Shi-Zun-Sheng-Shu) Shen's Health Keeping 沈氏尊生書	Pinelliae Rhizoma Praeparatum 9, Trichosanthis Semen 6, Bupleuri Radix 6, Coptidis Rhizoma 3, Scutellariae Radix 3, Ginseng Radix 2, Glycyrrhizae Radix et Rhizoma 1.5, Zingiberis Rhizoma Recens 3, Jujubae Fructus 2. (Daily dosage 35.5 g)	Clear heat to dispel phlegm, soothe the chest to disperse nodules.	Binding of phlegm and heat, chest impediment and cough.
118	Huang-Lian-Tang (Huang-Lian-Tang) 黃連湯	Shang-Han-Lun (Shang-Han-Lun) Treatise on Febrile Diseases 傷寒論	Coptidis Rhizoma 4.5, Glycyrrhizae Radix et Rhizoma Praeparata cum Melle 4.5, Zingiberis Rhizoma 4.5, Cinnamomi Ramulus 4.5, Ginseng Radix 3, Pinelliae Rhizoma Praeparatum 6, Jujubae Fructus 3. (Daily dosage 30 g)	Harmonize cold and heat, harmonize the stomach to downbear counterflow.	Chest heat, stomach cold, abdominal pain and feel nauseated.
119	Sih-Ni-San (Si-Ni-San)《San》 四逆散《散》	Shang-Han-Lun (Shang-Han-Lun) Treatise on Febrile Diseases 傷寒論	Glycyrrhizae Radix et Rhizoma 6, Aurantii Immaturus Fructus 6, Bupleuri Radix 6, Paeoniae Alba Radix 6. (Daily dosage 24 g)	Soothe the liver and regulate the spleen.	Reversal cold of the extremities, cough and palpitations, inhibited urination, abdomina pain and heaviness dysentery.
120	Syuan-Fu-Dai-Jhe-Shih-Tang (Xuan-Fu-Dai-Zhe-	Shang-Han-Za-Bing-Lun (Shang-Han-Za-Bing-Lun)	Inulae Flos 4.5, Ginseng Radix 3, Zingiberis Rhizoma Recens 7.5, Pinelliae Rhizoma Praeparatum 7.5,	Reinforce the healthy qi and tonify stomach, downbear	After sweating, vomiting and diarrhea, stuffiness below the

No.	Formula Name	Reference	Ingredients	Effects	Indications
	Shi-Tang)	Treatise on Cold Damage and Miscellaneous Diseases	Haematitum 1.5, Jujubae Fructus 4, Glycyrrhizae Radix et Rhizoma Praeparata cum Melle 4.5. (Daily dosage 32.5 g)	counterflow and resolve phlegm.	heart and belch persistently.
	旋覆代赭石湯	傷寒雜病論			
121	Ban-Sia-Hou-Pu-Tang (Ban-Xia-Hou-Pu-Tang)	Jin-Kuei-Yao-Lyue (Jin-Kui-Yao-Lue)	Pinelliae Rhizoma Praeparatum 8, Magnoliae Cortex 4.5, Poria 6, Zingiberis Rhizoma Recens 7.5, Perillae Folium 3. (Daily dosage 29 g)	Move qi to open stagnation, downbear counterflow and resolve phlegm.	Plum-pit qi (a disease characterized by a sensation of a foreign body present in the throat which can be neither swallowed nor ejecte), fullness and oppression in the chest and stomach, cough or vomiting.
		Synopsis of Golden Cabinet			
	半夏厚朴湯	金匱要略			
122	Jyu-Pi-Jhu-Ru-Tang (Ju-Pi-Zhu-Ru-Tang)	Ji-Sheng-Fang (Ji-Sheng-Fang)	Poria Rubra 3, Citri Reticulatae Pericarpium 3, Eriobotryae Folium 3, Ophiopogonis Radix 3, Bambusae Caulis In Taenia 3, Pinelliae Rhizoma Praeparatum 3, Ginseng Radix 1.5, Glycyrrhizae Radix et Rhizoma 1.5, Zingiberis Rhizoma Recens 3, Jujubae Fructus 2. (Daily dosage 26 g)	Regulate qi and clear heat, harmonize the middle and downbear counterflow.	Stomach heat and thirst, retching and poor appetite.
		Recipes for Saving Lives			
	橘皮竹茹湯	濟生方			
123	Jyu-He-Wan (Ju-He-Wan) 《Wan》	Ji-Sheng-Fang (Ji-Sheng-Fang)	Citri Reticulatae Semen 4, Sargassum 4, Eckloniae Thallus 4, Laminariae Thallus 4, Toosendan Fructus 4, Persicae Semen praeparatum 4, Magnoliae Cortex 1, Akebiae Caulis 1, Aurantii Immaturus Fructus 1, Corydalis Rhizoma 1, Cinnamomi Cortex Rasus 1, Aucklandiae Radix 1. (Daily dosage 30 g)	Move qi to break stagnation, soften hardness and dissipate binds.	Genital disease, swollen testicle which varying in size or hard as stone, or inducing gripping pain in umbilicus and abdomen, and swollen scrotum.
		Recipes for Saving Lives			
	橘核丸《丸》	濟生方			

No.	Formula Name	Reference	Ingredients	Effects	Indications
124	Fu-Yuan-Huo-Sie-Tang-Cyu-Chuan-Shan-Jia (Fu-Yuan-Huo-Xie-Tang-Qu-Chuan-Shan-Jia) 復元活血湯去穿山甲	Yi-Syue-Fa-Ming (Yi-Xue-Fa-Ming) Invention of Medicine 醫學發明	Bupleuri Radix 5, Angelicae Sinensis Radix 3, Trichosanthis Radix 3, ~~Manis Squama 2,~~ Glycyrrhizae Radix et Rhizoma 2, Carthami Flos 2, Persicae Semen 2, Rhei Radix et Rhizoma 10. (Daily dosage 27 g)	Activate blood and resolve stasis.	Knocks and falls, static blood stay below the hypochondrium and with severe pain.
125	Da-Huang-Mu-Dan-Pi-Tang (Da-Huang-Mu-Dan-Pi-Tang) 大黃牡丹皮湯	Jin-Kuei-Yao-Lyue (Jin-Kui-Yao-Lue) Synopsis of Golden Cabinet 金匱要略	Rhei Radix et Rhizoma 10, Moutan Radicis Cortex 2.5, Persicae Semen praeparatum 2.5, Benincasae Semen 6, Natrii Sulfas 7. (Daily dosage 28 g)	Discharge heat and break stasis, dissipate binds to disperse swelling.	Intestinal abscess, swelling and stuffiness in lower abdomen which severe pain when pressing, aversion to cold with fever.
126	Shao-Yao-Tang (Shao-Yao-Tang) 芍藥湯	Bing-Ji-Ci-Yi-Bao-Ming-Ji (Bing-Ji-Qi-Yi-Bao-Ming-Ji) Pathogenesis Relieved Life Saving 病機氣宜保命集	Paeoniae Alba Radix 7, Angelicae Sinensis Radix 3.5, Scutellariae Radix 3.5, Coptidis Rhizoma 3.5, Rhei Radix et Rhizoma 2, Aucklandiae Radix 1.5, Arecae Semen 1.5, Glycyrrhizae Radix et Rhizoma Praeparata cum Melle 1.5, Cinnamomi Cortex 1. (Daily dosage 25 g)	Clear dampness-heat, regulate qi and blood.	Dysentery, stool containing pus and blood, abdominal pain and tenesmus.
127	Guei-Jhih-Fu-Ling-Wan (Gui-Zhi-Fu-Ling-Wan)《Wan》 桂枝茯苓丸《丸》	Jin-Kuei-Yao-Lyue (Jin-Kui-Yao-Lue) Synopsis of Golden Cabinet 金匱要略	Cinnamomi Ramulus 6, Poria 6, Moutan Radicis Cortex 6, Persicae Semen praeparatum 6, Paeoniae Rubra Radix 6. (Daily dosage 30 g)	Activate blood and resolve stasis, eliminate masses mildly.	Woman commonly has aggregated accumulation, threatened abortion in pregnancy, persistent spotting, static blood and dysmenorrhea, amenorrhea.

No.	Formula Name	Reference	Ingredients	Effects	Indications
128	Dang-Guei-Nian-Tong-Tang (Dang-Gui-Nian-Tong-Tang) 當歸拈痛湯	Li-Dong-Yuan-Fang (Li-Dong-Yuan-Fang) Dong-Yuan Li's Prescriptions 李東垣方	Angelicae Sinensis Radix 1.5, Ginseng Radix 1.5, Artemisiae Scopariae Herba 3.5, Notopterygii Rhizoma et Radix 3.5, Saposhnikoviae Radix 2, Cimicifugae Rhizoma 1.5, Puerariae Radix 1.5, Atractylodis Rhizoma 1.5, Atractylodis Macrocephalae Rhizoma 2, Glycyrrhizae Radix et Rhizoma 3.5, Scutellariae Radix Tostum 3.5, Sophorae Flavescentis Radix 1.5, Anemarrhenae Rhizoma 2, Polyporus 2, Alismatis Rhizoma 2. (Daily dosage 33 g)	Clear heat and dry dampness, activate blood to relieve pain.	Lower energizer dampness-heat, whole body and joint pain, shoulder and back heaviness and all dampness-heat.
129	Sih-Ni-Tang (Si-Ni-Tang) 四逆湯	Shang-Han-Lun (Shang-Han-Lun) Treatise on Febrile Diseases 傷寒論	Glycyrrhizae Radix et Rhizoma Praeparata cum Melle 10, Zingiberis Rhizoma 7.5, Aconiti Lateralis Radix Preparata 10. (Daily dosage 27.5 g)	Warm the meridian and restore yang.	Yin exuberance with yang debilitation, reversal cold of the extremities, clear-food diarrhea, vomiting and abdominal pain.
130	Dang-Guei-Sih-Ni-Tang (Dang-Gui-Si-Ni-Tang) 當歸四逆湯	Shang-Han-Lun (Shang-Han-Lun) Treatise on Febrile Diseases 傷寒論	Angelicae Sinensis Radix 4.5, Cinnamomi Ramulus 4.5, Paeoniae Alba Radix 4.5, Asari Radix et Rhizoma 4.5, Jujubae Fructus 6, Glycyrrhizae Radix et Rhizoma Praeparata cum Melle 3, Akebiae Caulis 3. (Daily dosage 30 g)	Warm the meridian to dissipate cold, nourish blood to unblock vessels.	Cold entering the reverting yin, reversal cold of the extremities, faint pulse scarcely perceptible.
131	Jhen-Wu-Tang (Zhen-Wu-Tang) 真武湯	Shang-Han-Lun (Shang-Han-Lun) Treatise on Febrile Diseases 傷寒論	Poria 7.5, Paeoniae Alba Radix 7.5, Zingiberis Rhizoma Recens 7.5, Atractylodis Macrocephalae Rhizoma 5, Aconiti Lateralis Radix Preparata 3. (Daily dosage 30.5 g)	Warm the kidney and dissipate cold, fortify the spleen and drain water.	Spleen-kidney yang deficiency and internal stagnation of water qi.

No.	Formula Name	Reference	Ingredients	Effects	Indications
132	Siao-Jian-Jhong-Tang (Xiao-Jian-Zhong-Tang) 小建中湯	Shang-Han-Jin-Kuei-Fang (Shang-Han-Jin-Kui-Fang) Febrile and Golden Cabinet Formula 傷寒金匱方	Cinnamomi Ramulus 4.5, Glycyrrhizae Radix et Rhizoma Praeparata cum Melle 3, Jujubae Fructus 4.5, Paeoniae Alba Radix 9, Zingiberis Rhizoma Recens 4.5, Maltose 1. (Daily dosage 26.5 g)	Warm the middle to tonify deficiency, harmonize the interior and relax tension.	Spleen-stomach deficiency cold, abdominal urgency and abdominal pain.
133	Da-Jian-Jhong-Tang (Da-Jian-Zhong-Tang) 大建中湯	Jin-Kuei-Yao-Lyue (Jin-Kui-Yao-Lue) Synopsis of Golden Cabinet 金匱要略	Zanthoxyli Pericarpium 4, Zingiberis Rhizoma 16, Ginseng Radix 8, Maltose 1. (Daily dosage 29 g)	Warm the middle to tonify deficiency, downbear counterflow and relieve pain.	Thoracic fluid retention in diaphragm, panting, stuffiness and fullness below the heart.
134	Huang-Ci-Jian-Jhong-Tang (Huang-Qi-Jian-Zhong-Tang) 黃耆建中湯	Jin-Kuei-Yao-Lyue (Jin-Kui-Yao-Lue) Synopsis of Golden Cabinet 金匱要略	Cinnamomi Ramulus 4.5, Glycyrrhizae Radix et Rhizoma Praeparata cum Melle 3, Jujubae Fructus 4.5, Paeoniae Alba Radix 9, Zingiberis Rhizoma Recens 4.5, Maltose 1, Astragali Radix 2.5. (Daily dosage 29 g)	Warm the middle to tonify deficiency, harmonize the interior and relax tension.	Consumptive disease, spleen-stomach deficiency cold and abdominal pain, spontaneous sweating, shortness of breath, fatigued limbs and body, yang deficiency and generalized pain.
135	Liou-Yi-San (Liu-Yi-San)《San》 六一散《散》	Yi-Fang-Ji-Jie (Yi-Fang-Ji-Jie) Collected Explanation on Prescriptions 醫方集解	Talcum 24, Glycyrrhizae Radix et Rhizoma 4. (Daily dosage 28 g)	Clear summerheat and drain dampness.	Summerheat-dampness and fever, vexation and thirst, inhibited urination.

No.	Formula Name	Reference	Ingredients	Effects	Indications
136	Wu-Ling-San (Wu-Ling-San) 《San》	Shang-Han-Lun (Shang-Han-Lun)	Polyporus 4.5, Alismatis Rhizoma 7.5, Poria 4.5, Cinnamomi Ramulus 3, Atractylodis Macrocephalae Rhizoma 4.5. (Daily dosage 24 g)	Resolve qi and drain water, fortify the spleen and dispel dampness.	Internal stagnation of fluid-dampness, exterior syndrome, inhibited urination, polydipsia and thirst, vomiting immediately when drinking water and diarrhea.
		Treatise on Febrile Diseases			
	五苓散《散》	傷寒論			
137	Jhu-Ling-Tang (Zhu-Ling-Tang)	Shang-Han-Lun (Shang-Han-Lun)	Polyporus 6, Poria 6, Asini Corii Colla 6, Talcum 6, Alismatis Rhizoma 6. (Daily dosage 30 g)	Nourish yin, clear heat and drain water.	Binding of water and heat, internal heat damage to yin, fever, thirst, inhibited urination, vexation and insomnia.
		Treatise on Febrile Diseases			
	豬苓湯	傷寒論			
138	Yue-Bi-Jia-Jhu-Tang (Yue-Bi-Jia-Zhu-Tang)	Jin-Kuei-Yao-Lyue (Jin-Kui-Yao-Lue)	Ephedrae Herba 6, Gypsum Fibrosum 8, Zingiberis Rhizoma Recens 3, Glycyrrhizae Radix et Rhizoma 2, Jujubae Fructus 3, Atractylodis Macrocephalae Rhizoma 4. (Daily dosage 26 g)	Disperse wind and discharge heat, promote sweating to move water.	Skin edema, limbs edema and inhibited urination.
		Synopsis of Golden Cabinet			
	越婢加朮湯	金匱要略			
139	Ciang-Huo-Sheng-Shih-Tang (Qiang-Huo-Sheng-Shi-Tang)	Nei-Wai-Shang-Bian-Huo-Lun (Nei-Wai-Shang-Bian-Huo-Lun)	Notopterygii Rhizoma et Radix 7, Angelicae Pubescentis Radix 7, Ligustici Rhizoma et Radix 3.5, Saposhnikoviae Radix 3.5, Glycyrrhizae Radix et Rhizoma Praeparata cum Melle 3.5, Chuanxiong Rhizoma 3.5, Viticis Simplicifoliae Fructus 2. (Daily dosage 30 g)	Promote sweating, dispel wind and drain dampness.	Exterior pathogenic dampness, headache and heavy-headedness, lumbar vertebrae pain or whole body pain, mild fever, dizziness and fatigue.
		Discourse on the Differentiation of Exogenous and Endogenous Diseases			
	羌活勝濕湯	內外傷辨惑論			

No.	Formula Name	Reference	Ingredients	Effects	Indications
140	Yin-Chen-Hao-Tang (Yin-Chen-Hao-Tang)	Shang-Han-Lun (Shang-Han-Lun)	Artemisiae Scopariae Herba 18, Rhei Radix et Rhizoma 6, Gardeniae Fructus 6. (Daily dosage 30 g)	Clear heat and drain dampness.	Yang jaundice and fever, sweating from the head, body without sweating, thirst, abdominal slight fullness, short and reddish urine.
		Treatise on Febrile Diseases			
	茵陳蒿湯	傷寒論			
141	Yi-Yi-Ren-Tang (Yi-Yi-Ren-Tang)	Jhang-Shih-Yi-Tong (Zhang-Shi-Yi-Tong)	Coicis Semen 20, Paeoniae Alba Radix 3, Angelicae Sinensis Radix 3, Ephedrae Herba 1.5, Cinnamomi Ramulus 1.5, Atractylodis Rhizoma 2, Glycyrrhizae Radix et Rhizoma Praeparata cum Melle 1.5, Zingiberis Rhizoma Recens 3. (Daily dosage 35.5 g)	Dispel dampness to free impediment.	Dampness impediment, swollen joint and heavy aching.
		Zhang's Treatise on General Medicine			
	薏苡仁湯	張氏醫通			
142	Ling-Guei-Jhu-Gan-Tang (Ling-Gui-Zhu-Gan-Tang)	Jin-Kuei-Yao-Lyue (Jin-Kui-Yao-Lue)	Poria 10, Cinnamomi Ramulus 7.5, Atractylodis Macrocephalae Rhizoma 7.5, Glycyrrhizae Radix et Rhizoma Praeparata cum Melle 5. (Daily dosage 30 g)	Fortify the spleen and drain dampness, warm and resolve phlegm.	Phlegm-retained fluid disease, fullness and distention in the chest and hypochondrium, dizziness and palpitations, shortness of breath and cough.
		Synopsis of Golden Cabinet			
	苓桂朮甘湯	金匱要略			
143	Siao-Ban-Sia-Jia-Fu-Ling-Tang (Xiao-Ban-Xia-Jia-Fu-Ling-Tang)	Jin-Kuei-Yao-Lyue (Jin-Kui-Yao-Lue)	Pinelliae Rhizoma Praeparatum 12, Zingiberis Rhizoma Recens 12, Poria 6. (Daily dosage 30 g)	Move water to eliminate stuffiness.	Sudden vomiting, stuffiness below the heart, fluid-dampness in the diaphragm, dizziness and palpitations.
		Synopsis of Golden Cabinet			
	小半夏加茯苓湯	金匱要略			
144	Shen-Jhu-Tang (Shen-Zhu-Tang)	Jin-Kuei-Yao-Lyue (Jin-Kui-Yao-Lue)	Glycyrrhizae Radix et Rhizoma 4, Atractylodis Macrocephalae Rhizoma 4, Zingiberis Rhizoma 8, Poria 8. (Daily dosage 24 g)	Warm the spleen and dispel dampness.	Cold-dampness damage the spleen, generalized heaviness, cold pain in lumbar and below lumbar.
		Synopsis of Golden Cabinet			
	腎著湯	金匱要略			

No.	Formula Name	Reference	Ingredients	Effects	Indications
145	Run-Chang-Tang (Run-Chang-Tang)	Wan-Bing-Huei-Chun (Wan-Bing-Hui-Chun)	Angelicae Sinensis Radix 2.5, Rehmanniae Radix Praeparata 2.5, Rehmanniae Radix Recens 2.5, Cannabis Fructus 2.5, Persicae Semen praeparatum 2.5, Armeniacae Amarum Semen praeparatum 2.5, Aurantii Immaturus Fructus 2.5, Scutellariae Radix 2.5, Magnoliae Cortex 2.5, Rhei Radix et Rhizoma 2.5, Glycyrrhizae Radix et Rhizoma 1.5. (Daily dosage 26.5 g)	Moisten the intestines to relax the bowels.	Dryness-heat in intestines and stomach, constipation.
		Recovery from All Ailments			
	潤腸湯	萬病回春			
146	Siang-Sheng-Po-Di-Wan (Xiang-Sheng-Po-Di-Wan) 《Wan》	Wan-Bing-Huei-Chun (Wan-Bing-Hui-Chun)	Forsythiae Fructus 4, Platycodi Radix 3, Chuanxiong Rhizoma 4, Amomi Fructus 1.5, Chebulae Fructus 1.5, Catechu 3, Menthae Herba 6, Rhei Radix et Rhizoma 1.5, Glycyrrhizae Radix et Rhizoma 3. (Daily dosage 27.5 g)	Clear the lung to moisten the throat.	Sore throat, hoarseness and loss of voice.
		Recovery from All Ailments			
	響聲破笛丸《丸》	萬病回春			
147	Ban-Sia-Sie-Sin-Tang (Ban-Xia-Xie-Xin-Tang)	Shang-Han-Lun (Shang-Han-Lun)	Pinelliae Rhizoma Praeparatum 7.5, Scutellariae Radix 4.5, Zingiberis Rhizoma 4.5, Ginseng Radix 4.5, Coptidis Rhizoma 1.5, Jujubae Fructus 3, Glycyrrhizae Radix et Rhizoma Praeparata cum Melle 4.5. (Daily dosage 30 g)	Harmonize the stomach to downbear counterflow.	Cold damage induced by early purgation, stuffiness and fullness below the heart, vomiting and borborigmus.
		Treatise on Febrile Diseases			
	半夏瀉心湯	傷寒論			
148	Sie-Bai-San (Xie-Bai-San)	Siao-Er-Yao-Jheng- Jhih-Jyue (Xiao-Er-Yao-Zheng-Zhi-Jue)	Lycii Radicis Cortex 10, Mori Radicis Cortex 10, Glycyrrhizae Radix et Rhizoma 1, Oryzae Semen 8. (Daily dosage 29 g)	Purge the lung and clear heat.	Lung heat and cough, asthma in severe cases, skin-steaming fever, worse in the late afternoon.
		Key to Therapeutics of Childen's Diseases			
	瀉白散	小兒藥證直訣			

No.	Formula Name	Reference	Ingredients	Effects	Indications
149	Pu-Ji-Siao-Du-Yin (Pu-Ji-Xiao-Du-Yin) 《San》	Dong-Yuan-Shih-Siao-Fang (Dong-Yuan-Shi-Xiao-Fang)	Scutellariae Radix 5, Coptidis Rhizoma 5, Scrophulariae Radix 2, Bupleuri Radix 2, Platycodi Radix 2, Glycyrrhizae Radix et Rhizoma 2, Forsythiae Fructus 1, Arctii Fructus 1, Isatidis Radix 1, Lasiosphaera (Calvatia) 1, Bombyx Batryticatus 0.7, Cimicifugae Rhizoma 0.7, Menthae Herba 1, Citri Reticulatae Pericarpium 2. (Daily dosage 26.4 g)	Disperse wind to clear the pathogen, clear heat and detoxicate.	Erysipelas facial syndrome, swelling and painful head, face and throat.
		Dongyuan's Effective Prescriptions			
	普濟消毒飲《散》	東垣試效方			
150	San-Huang-Sie-Sin-Tang (San-Huang-Xie-Xin-Tang) 《Wan》	Jin-Kuei-Yao-Lyue (Jin-Kui-Yao-Lue)	Rhei Radix et Rhizoma 12, Coptidis Rhizoma 6, Scutellariae Radix 6. (Daily dosage 24 g)	Purge fire and detoxicate.	Triple energizers excess heat, mouth and tongue sores, hematemesis and epistaxis, vexing heat in the chest and diaphragm, constipation and reddish painful urination.
		Synopsis of Golden Cabinet			
	三黃瀉心湯《丸》	金匱要略	Add honey q.s. to make pills in traditional formula. (or Add rice paste)		
151	Cing-Sin-Li-Ge-Tang (Qing-Xin-Li-Ge-Tang)	Jhong-Guo-Yi-Syue-Da-Cih-Dian (Zhong-Guo-Yi-Xue-Da-Ci-Dian)	Saposhnikoviae Radix 3, Schizonepetae Herba 3, Menthae Herba 3, Platycodi Radix 3, Scutellariae Radix 3, Coptidis Rhizoma 3, Gardeniae Fructus 1.5, Forsythiae Fructus 1.5, Scrophulariae Radix 1.5, Rhei Radix et Rhizoma 1.5, Natrii Sulfas 1.5, Arctii Fructus 1.5, Glycyrrhizae Radix et Rhizoma 1.5, Lonicerae Flos 2, Lophatheri Caulis et Folium 4. (Daily dosage 34.5 g)	Clear heat and detoxicate.	Heat in the heart and spleen, swelling and painful throat, cheeks and tongue.
		Chinese Medical Science Dictionary			
	清心利膈湯	中國醫學大辭典			
152	Ban-Sia-Tian-Ma-Bai-Jhu-Tang (Ban-Xia-Tian-Ma-Bai-Zhu-Tang)	Pi-Wei-Lun (Pi-Wei-Lun)	Pinelliae Rhizoma Praeparatum 4.5, Phellodendri Cortex 0.5, Zingiberis Rhizoma 0.5, Gastrodiae Rhizoma 1.5, Atractylodis Rhizoma 1.5, Poria 1.5, Astragali Radix 1.5, Alismatis Rhizoma 1.5, Ginseng	Tonify the spleen and dry dampness, resolve phlegm and extinguish wind.	Phlegm syncope and headache, cough with sticky and slimy phlegm, dizziness, vexation and oppression, nausea and
		Treatise on the Spleen and stomach			

No.	Formula Name	Reference	Ingredients	Effects	Indications
	半夏天麻白朮湯	脾胃論	Radix 1.5, Atractylodis Macrocephalae Rhizoma 3, Fermentata Medicata Massa 3, Hordei Germinatus Fructus 4.5, Citri Reticulatae Pericarpium 4.5. (Daily dosage 29.5 g)		hiccup, heavy body and cold limbs.
153	An-Jhong-San (An-Zhong-San) 《San》	Tai-Ping-Huei-Min-He-Ji-Jyu-Fang (Tai-Ping-Hui-Min-He-Ji-Ju-Fang)	Glycyrrhizae Radix et Rhizoma 6, Corydalis Rhizoma 3, Alpiniae Officinari Rhizoma 3, Zingiberis Rhizoma 3, Foeniculi Fructus 3, Cinnamomi Cortex 3, Ostreae Concha Preparata 3. (Daily dosage 24 g)	Warm the middle to dissipate cold and relieve pain.	Qi stagnation in spleen-stomach due to cold congealing, stomach duct and abdomen pain, acid vomiting, food accumulation and poor digestion, distention and fullness.
		Prescription of Peaceful Benevolent Dispensary			
	安中散《散》	太平惠民和劑局方			
154	Yu-Ping-Fong-San (Yu-Ping-Feng-San) 《San》	Shih-Yi-De-Siao-Fang (Shi-Yi-De-Xiao-Fang)	Astragali Radix 15, Saposhnikoviae Radix 5, Atractylodis Macrocephalae Rhizoma 5, Zingiberis Rhizoma Recens 3, Jujubae Fructus 2. (Daily dosage 30 g)	Tonify qi and secure the exterior to stop sweating.	Exterior deficiency and spontaneous sweating, weakness and wind-cold induced by exopathogen.
		Effective Prescriptions for Generations			
	玉屏風散《散》	世醫得效方	Without Zingiberis Rhizoma Recens and Jujubae Fructus in traditional formula.		
155	Yi-Zih-Tang (Yi-Zi-Tang)	Yan-Fang (Yan-Fang)	Angelicae Sinensis Radix 6, Bupleuri Radix 6, Scutellariae Radix 3, Glycyrrhizae Radix et Rhizoma 3, Cimicifugae Rhizoma 2, Rhei Radix et Rhizoma 1.5. (Daily dosage 21.5 g)	Clear heat to relax the bowels.	Constipation and hemorrhoid pain.
		Experiential Prescriptions			
	乙字湯	驗方			

No.	Formula Name	Reference	Ingredients	Effects	Indications
156	Siao-Jhih-Wan (Xiao-Zhi-Wan) 《Wan》	Yang-Yi-Da-Cyuan (Yang-Yi-Da-Quan)	Rehmanniae Radix Recens 4.8, Scutellariae Radix 1.8, Lonicerae Flos 1.2, Citri Immaturus Fructus 1.2, Gentianae Macrophyllae Radix 1.2, Saposhnikoviae Radix 2.4, Rhei Radix et Rhizoma 2.4, Angelicae Sinensis Radix 2.4, Atractylodis Rhizoma 2.4, Pheretima 2.4, Sophorae Immaturus Flos 2.4, Paeoniae Rubra Radix 2.4. (Daily dosage 27 g)	Clear heat to cool the blood and relax the bowels.	Anal fistula and constipation.
		Complete Works of Sore			
	消痣丸《丸》	瘍醫大全	Add honey q.s. to make pills in traditional formula.		
157	Zih-Yun-Gao (Zi-Yun-Gao)	Wai-Ke-Jheng-Zong (Wai-Ke-Zheng-Zong)	Arnebiae Radix 5, Angelicae Sinensis Radix 5, Beeswax 15, Sesame oil 13, oiliness based agent q.s.. (External application, apply to the affected area q.s. sparingly, several times a day.)	Moisten the skin to relieve itching and promote tissue regeneration.	Dry and itchy skin, cracked extremities, scald and frostbite.
		Orthodox Manual of External Disease			
	紫雲膏(Only for traditional formula.)	外科正宗			
158	Ba-Wei-Dai-Sia-Fang (Ba-Wei-Dai-Xia-Fang)	Yan-Fang (Yan-Fang)	Angelicae Sinensis Radix 5, Chuanxiong Rhizoma 3, Poria 3, Akebiae Caulis 3, Citri Reticulatae Pericarpium 2, Smilacis Glabrae Rhizoma 6, Lonicerae Flos 3, Rhei Radix et Rhizoma 1. (Daily dosage 26 g)	Clear heat and detoxicate.	Dampness-heat vaginal discharge and heat strangury.
		Experiential Prescriptions			
	八味帶下方	驗方			
159	Wun-Jing-Tang (Wen-Jing-Tang)	Jin-Kuei-Yao-Lyue (Jin-Kui-Yao-Lue)	Evodiae Fructus 3, Angelicae Sinensis Radix 2, Chuanxiong Rhizoma 2, Paeoniae Alba Radix 2, Ginseng Radix 2, Cinnamomi Ramulus 2, Asini Corii Colla 2, Moutan Radicis Cortex 2, Zingiberis Rhizoma Recens 2, Glycyrrhizae Radix et Rhizoma 2, Pinelliae	Warm the meridian to nourish blood, activate blood to regulate menstruation.	Woman lower abdomen cold, constrained distention and contracture, menstrual irregularities and menorrhagia.
		Synopsis of Golden Cabinet			
	溫經湯	金匱要略			

No.	Formula Name	Reference	Ingredients	Effects	Indications
			Rhizoma Praeparatum 3, Ophiopogonis Radix 4. (Daily dosage 28 g)		
160	Cyong-Guei-Jiao-Ai-Tang (Qiong-Gui-Jiao-Ai-Tang)	Jin-Kuei-Yao-Lyue (Jin-Kui-Yao-Lue)	Chuanxiong Rhizoma 2.5, Asini Corii Colla 2.5, Glycyrrhizae Radix et Rhizoma 2.5, Artemisiae Argyi Folium 4, Angelicae Sinensis Radix 4, Paeoniae Alba Radix 5, Rehmanniae Radix Recens 8. (Daily dosage 28.5 g)	Tonify blood to regulate menstruation, prevent abortion and stop flooding.	Persistent bleeding after abortion and profuse menstruation.
		Synopsis of Golden Cabinet			
	芎歸膠艾湯	金匱要略			
161	Dang-Guei-Shao-Yao- San (Dang-Gui-Shao-Yao-San) 《San》	Jin-Kuei-Yao-Lyue (Jin-Kui-Yao-Lue)	Angelicae Sinensis Radix 2, Paeoniae Alba Radix 10, Poria 2.5, Atractylodis Macrocephalae Rhizoma 2.5, Alismatis Rhizoma 5, Chuanxiong Rhizoma 5. (Daily dosage 27 g)	Tonify blood and nourish the liver, fortify the spleen and drain dampness.	Menstrual irregularities, lumbago occurring in pregnancy, dizziness, lumbar and feet cold.
		Synopsis of Golden Cabinet			
	當歸芍藥散《散》	金匱要略			
162	Sheng-Hua-Tang (Sheng-Hua-Tang)	Fu-Cing-Jhu-Nyu-Ke (Fu-Qing-Zhu-Nu-Ke)	Angelicae Sinensis Radix 16, Chuanxiong Rhizoma 6, Persicae Semen praeparatum 3, Zingiberis Rhizoma Carbonisata 1, Glycyrrhizae Radix et Rhizoma Praeparata cum Melle 1. (Daily dosage 27 g)	Engender blood, resolve stasis, warm the middle and dissipate cold.	Retention of the lochia after postpartum and lower abdomen pain.
		Fu Qingzhu's Gynecology and Obstetrics			
	生化湯	傅青主女科			
163	Yu-Cyuan-Wan (Yu-Quan-Wan) 《Wan》	Gu-Jin-Yi-Tong (Gu-Jin-Yi-Tong)	Trichosanthis Radix 4.5, Puerariae Radix 4.5, Ophiopogonis Radix 3, Ginseng Radix 3, Poria 3, Mume Fructus 3, Glycyrrhizae Radix et Rhizoma 3, Astragali Radix Recens 1.5, Astragali Radix Praeparata cum Melle 1.5. (Daily dosage 27 g)	Engender fluid to stop thirsting, tonify qi and yin.	Wasting-thirst and polydipsia, frequent urination, diarrhea and lassitude of essence-spirit.
		Complete Compendium of Medical Works, Ancient and Modern			
	玉泉丸《丸》	古今醫統	Add honey q.s. to make pills in traditional formula.		

No.	Formula Name	Reference	Ingredients	Effects	Indications
164	Huang-Lian-Shang-Cing-Wan (Huang-lian-Shang-Qing-Wan) 《Wan》	Jhong-Guo-Yi-Syue-Da-Cih-Dian (Zhong-Guo-Yi-Xue-Da-Ci-Dian)	Coptidis Rhizoma 3, Scutellariae Radix 3, Phellodendri Cortex 3, Gardeniae Fructus 3, Chrysanthemi Flos 1.5, Angelicae Sinensis Radix 1.5, Platycodi Radix 0.8, Puerariae Radix 0.8, Menthae Herba 0.8, Scrophulariae Radix 0.8, Trichosanthis Radix 0.8, Chuanxiong Rhizoma 0.8, Curcumae Longae Rhizoma 2.2, Forsythiae Fructus 2.2, Rhei Radix et Rhizoma 4.4. (Daily dosage 28.6 g)	Disperse wind to clear heat and detoxicate.	Heat accumulated in upper energizer, eye and throat pain, mouth and tongue sores, vexing heat in the heart and diaphragm, liver fire bearing upward, wind-heat and rhinitis.
		Chinese Medical Science Dictionary			
	黃連上清丸《丸》	中國醫學大辭典	Add honey q.s. to make pills in traditional formula.		
165	Jhih-Zih-Shih-Tang (Zhi-Zi-Shi-Tang)	Shang-Han-Lun (Shang-Han-Lun)	Gardeniae Fructus 10, Sojae Semen Preparatum 15. (Daily dosage 25 g)	Clear heat to relieve agitation.	After sweating and vomiting, pathogenic heat accumulating in the chest, anguish body, vexation of deficiency type and insomnia.
		Treatise on Febrile Diseases			
	梔子豉湯	傷寒論			
166	Jie-Geng-Tang (Jie-Geng-Tang)	Shang-Han-Lun (Shang-Han-Lun)	Platycodi Radix 8, Glycyrrhizae Radix et Rhizoma 16. (Daily dosage 24 g)	Expel pus and detoxicate.	Lung abscess, pus vomiting with stinky smell, swelling and painful throat.
		Treatise on Febrile Diseases			
	桔梗湯	傷寒論			
167	Cing-Fei-Yin (Qing-Fei-Yin)	Yi-Fang-Ji-Jie (Yi-Fang-Ji-Jie)	Armeniacae Amarum Semen praeparatum 5, Fritillariae Cirrhosae Bulbus 5, Poria 5, Platycodi Radix 2.5, Glycyrrhizae Radix et Rhizoma 2.5, Schisandrae Chinensis Fructus 2.5, Citri Exocarpium Rubrum 2.5, Zingiberis Rhizoma Recens 3. (Daily dosage 28 g)	Resolve phlegm and moisten dryness.	Cough induced by phlegm-dampness and qi counterflow.
		Collected Explanation on Prescriptions			
	清肺飲	醫方集解			

No.	Formula Name	Reference	Ingredients	Effects	Indications
168	Gua-Lou-Jhih-Shih-Tang (Gua-Lou-Zhi-Shi-Tang) 瓜蔞枳實湯	Wan-Bing-Huei-Chun (Wan-Bing-Hui-Chun) Recovery from All Ailments 萬病回春	Trichosanthis Fructus 3, Aurantii Immaturus Fructus 3, Platycodi Radix 3, Poria 3, Fritillariae Cirrhosae Bulbus 3, Citri Reticulatae Pericarpium 3, Scutellariae Radix 3, Gardeniae Fructus 3, Angelicae Sinensis Radix 2, Amomi Fructus 1.5, Aucklandiae Radix 1.5, Glycyrrhizae Radix et Rhizoma 1, Zingiberis Rhizoma Recens 3. (Daily dosage 33 g)	Clear the lung and resolve phlegm, move qi and soothe the diaphragm.	Chronic cough, phlegm accumulated in the chest and diaphragm, phlegm clouding the pericardium, sluggish speech.
169	Bu-Huan-Jin-Jheng-Ci-San (Bu-Huan-Jin-Zheng-Qi-San) 不換金正氣散	Tai-Ping-Huei-Min-He-Ji-Jyu-Fang (Tai-Ping-Hui-Min-He-Ji-Ju-Fang) Prescription of Peaceful Benevolent Dispensary 太平惠民和劑局方	Magnoliae Cortex 4, Pogostemonis Herba 4, Citri Reticulatae Pericarpium 4, Pinelliae Rhizoma Praeparatum 4, Atractylodis Rhizoma 4, Glycyrrhizae Radix et Rhizoma Praeparata cum Melle 4, Zingiberis Rhizoma Recens 3, Jujubae Fructus 2. (Daily dosage 29 g)	Move qi and resolve dampness, harmonize the stomach to stop vomiting.	Four seasons cold damage, miasma induced by seasonal qi, headache, alternating chills and fever, cholera, vomiting and diarrhea.
170	Jian-Pi-Wan (Jian-Pi-Wan)《Wan》 健脾丸《丸》	Jheng-Jhih-Jhun-Sheng (Zheng-Zhi-Zhun-Sheng) Standards for Diagnosis and Treatment 證治準繩	Atractylodis Macrocephalae Rhizoma 5, Aucklandiae Radix 1.5, Coptidis Rhizoma 1.5, Glycyrrhizae Radix et Rhizoma 1.5, Poria 4, Ginseng Radix 3, Fermentata Medicata Massa 2, Citri Reticulatae Pericarpium 2, Amomi Fructus 2, Hordei Germinatus Fructus 2, Crataegi Fructus 2, Dioscoreae Rhizoma 2, Myristicae Semen 2. (Daily dosage 30.5 g)	Replenish qi and fortify the spleen, harmonize the stomach to promote digestion.	Spleen-stomach weakness, poor appetite, distention and fullness in stomach duct and abdomen.
171	Lian-Ciao-Bai-Du-San (Lian-Qiao-Bai-Du-San)	Yi-Fang-Ji-Jie (Yi-Fang-Ji-Jie)	Notopterygii Rhizoma et Radix 2, Angelicae Pubescentis Radix 2, Bupleuri Radix 2, Peucedani Radix 2, Chuanxiong Rhizoma 2, Citri Immaturus	Clear heat to release the exterior, disperse swelling and detoxicate.	Cold damage and headache, the initial stage of sore and ulcer.

No.	Formula Name	Reference	Ingredients	Effects	Indications
		Collected Explanation on Prescriptions	Fructus 2, Platycodi Radix 2, Poria 2, Lonicerae Flos 2, Forsythiae Fructus 2, Glycyrrhizae Radix et Rhizoma 1, Zingiberis Rhizoma Recens 2, Menthae Herba 2. (Daily dosage 25 g)		
	連翹敗毒散	醫方集解			
172	Bu-Yin-Tang (Bu-Yin-Tang)	Wan-Bing-Huei-Chun (Wan-Bing-Hui-Chun)	Angelicae Sinensis Radix 2, Paeoniae Alba Radix 2, Rehmanniae Radix Recens 2, Rehmanniae Radix Praeparata 2, Citri Reticulatae Pericarpium 2, Foeniculi Fructus 2, Psoraleae Fructus 2, Achyranthis Bidentatae Radix 2, Eucommiae Cortex 2, Poria 2, Ginseng Radix 1, Phellodendri Cortex 1.5, Anemarrhenae Rhizoma 1.5, Glycyrrhizae Radix et Rhizoma Praeparata cum Melle 1, Jujubae Fructus 2. (Daily dosage 27 g)	Nourish yin to tonify the kidney.	Kidney deficiency and lumbago.
		Recovery from All Ailments			
	補陰湯	萬病回春			
173	Mai-Wei-Di-Huang-Wan (Mai-Wei-Di-Huang-Wan) 《Wan》	Yi-Fang-Ji-Jie (Yi-Fang-Ji-Jie)	Rehmanniae Radix Praeparata 8, Corni Sarcocarpium 4, Dioscoreae Rhizoma 4, Poria 3, Moutan Radicis Cortex 3, Alismatis Rhizoma 3, Schisandrae Chinensis Fructus 2, Ophiopogonis Radix 3. (Daily dosage 30 g)	Constrain the lung and nourish yin.	Lung-kidney yin deficiency, cough and dyspnea of deficiency type, tidal fever and night sweating.
		Collected Explanation on Prescriptions			
	麥味地黃丸《丸》	醫方集解	Add honey q.s. to make pills in traditional formula.		
174	Zih-Yin-Di-Huang-Wan (Zi-Yin-Di-Huang-Wan) Shou-Gan-Di-Huang-Wan (Shou-Gan-Di-Huang-Wan) 《Wan》	Lan-Shih-Mi-Cang (Lan-Shi-Mi-Cang)	Ginseng Radix 1, Glycyrrhizae Radix et Rhizoma Praeparata cum Melle 1, Asparagi Radix 1.5, Lycii Radicis Cortex 1.5, Schisandrae Chinensis Fructus 1.5, Citri Immaturus Fructus 1, Coptidis Rhizoma 1.5, Angelicae Sinensis Radix 2.5, Scutellariae Radix 2.5,	Nourish yin and clear heat, tonify the liver and improve vision.	Deficiency of the liver and kidney, yin deficiency heat, dizziness and blurred vision.
		Medical Works Secretly Kept in Imperial Library			

No.	Formula Name	Reference	Ingredients	Effects	Indications
	滋陰地黃丸 （熟乾地黃丸）《丸》	蘭室秘藏	Rehmanniae Radix Recens 4, Bupleuri Radix 4, Rehmanniae Radix Praeparata 5. (Daily dosage 27 g) Add honey q.s. to make pills in traditional formula.		
175	Dang-Guei-Bu-Sie-Tang (Dang-Gui-Bu-Xie-Tang) 當歸補血湯	Nei-Wai-Shang-Bian-Huo-Lun (Nei-Wai-Shang-Bian-Huo-Lun) Discourse on the Differentiation of Exogenous and Endogenous Diseases 內外傷辨惑論	Astragali Radix 25, Angelicae Sinensis Radix 5. (Daily dosage 30 g)	Tonify qi and engender blood.	Large and feeble pulse, qi weakness and blood deficiency, overexertion, fatigue and internal damage.
176	Da-Bu-Yin-Wan (Da-Bu-Yin-Wan) 《Wan》 大補陰丸《丸》	Dan-Si-Sin-Fa (Dan-Xi-Xin-Fa) Danxi`s Experiential Therapy 丹溪心法	Phellodendri Cortex 6, Anemarrhenae Rhizoma 6, Rehmanniae Radix Praeparata 9, Testudinis Carapax et Plastrum 9. (Daily dosage 30 g) Add honey q.s. to make pills in traditional formula.	Nourish yin to downbear fire.	Yin deficiency with fire effulgence, lung atrophy and hemoptysis, hiccup and heat vexation, steaming bone and night sweating, feet and knees pain and heat.
177	Ci-Bao-Mei-Ran-Dan (Qi-Bao-Mei-Ran-Dan) 《Wan》 七寶美髯丹《丸》	Yi-Fang-Ji-Jie (Yi-Fang-Ji-Jie) Collected Explanation on Prescriptions 醫方集解	Polygoni Multiflori Radix Praeparata 12, Poria 3, Achyranthis Bidentatae Radix 3, Angelicae Sinensis Radix 3, Lycii Fructus 3, Cuscutae Semen 3, Psoraleae Fructus 1.5. (Daily dosage 28.5 g) Add honey q.s. to make pills in traditional formula.	Tonify the kidney and nourish the blood.	Kidney yin deficiency, fatigued sinew and bone, premature graying hair.
178	Ban-Long-Wan (Ban-Long-Wan)	Gu-Jin-Yi-Tong (Gu-Jin-Yi-Tong)	Cervi Cornu Degelatinatum 5, Cervi Cornus Colla 5, Cuscutae Semen 5, Platycladi Semen 5, Rehmanniae	Nourish qi and blood, tonify sinew and bone.	Kidney yang deficiency, limp lumbar and knees, frequent

No.	Formula Name	Reference	Ingredients	Effects	Indications
	《Wan》	Complete Compendium of Medical Works, Ancient and Modern	Radix Praeparata 5, Poria 2.5, Psoraleae Fructus 2.5. (Daily dosage 30 g)		urination and cold limbs.
	斑龍丸《丸》	古今醫統			
179	Zai-Zao-San (Zai-Zao-San)	Shang-Han-Liou-Shu (Shang-Han-Liu-Shu)	Astragali Radix 3, Ginseng Radix 3, Cinnamomi Ramulus 3, Glycyrrhizae Radix et Rhizoma 3, Aconiti Lateralis Radix Preparatum 1.5, Asari Radix et Rhizoma 1.5, Notopterygii Rhizoma et Radix 2.5, Saposhnikoviae Radix 2.5, Chuanxiong Rhizoma 2.5, Zingiberis Rhizoma Tostum 3, Paeoniae Alba Radix 3, Jujubae Fructus 3. (Daily dosage 31.5 g)	Warm yang and tonify qi.	Wind-cold induced by exopathogen, light heat and heavy cold, absence of sweating and cold limbs.
		Six Febrile Books			
	再造散	傷寒六書			
180	Yang-Gan-Wan (Yang-Gan-Wan) 《Wan》	Ji-Sheng-Fang (Ji-Sheng-Fang)	Angelicae Sinensis Radix 3.5, Plantaginis Semen 3.5, Paeoniae Alba Radix 3.5, Saposhnikoviae Radix 3.5, Prinsepiae Nux 3.5, Rehmanniae Radix Praeparata 3.5, Chuanxiong Rhizoma 3.5, Broussonetiae Fructus 3.5. (Daily dosage 28 g)	Nourish blood and improve vision.	Liver blood deficiency, blurred vision, eye discharge and fatigued vision.
		Recipes for Saving Lives			
	養肝丸《丸》	濟生方	Add honey q.s. to make pills in traditional formula.		
181	Cing-Liang-San (Qing-Liang-San)	Wan-Bing-Huei-Chun (Wan-Bing-Hui-Chun)	Gardeniae Fructus 3, Forsythiae Fructus 3, Scutellariae Radix 3, Saposhnikoviae Radix 3, Citri Immaturus Fructus 3, Coptidis Rhizoma 3, Angelicae Sinensis Radix 3, Rehmanniae Radix Recens 3, Glycyrrhizae Radix et Rhizoma 3, Platycodi Radix 1.5, Menthae Herba 1.5 , Junci Medulla 1, Camelliae Sinensis Folium 1, Sophorae Tonkinensis Radix 1. (Daily	Clear heat and purge fire, disperse swelling to relieve pain.	All the excess fire syndrome, swelling and painful throat.
		Recovery from All Ailments			
	清涼散	萬病回春			

No.	Formula Name	Reference	Ingredients	Effects	Indications
			dosage 33 g)		
182	Gan-Mai-Da-Zao-Tang (Gan-Mai-Da-Zao-Tang) Gan-Cao-Siao-Mai-Da-Zao-Tang (Gan-Cao-Xiao-Mai-Da-Zao-Tang)	Jin-Kuei-Yao-Lyue (Jin-Kui-Yao-Lue)	Glycyrrhizae Radix et Rhizoma 6, Tritici Fructus 12, Jujubae Fructus 6. (Daily dosage 24 g)	Nourish the heart to tranquilize, harmonize the middle to relax tension.	Woman hysteria, rapid sorrow and crying, night crying in babies and insomnia.
		Synopsis of Golden Cabinet			
	甘麥大棗湯（甘草小麥大棗湯）	金匱要略			
183	Chai-Hu-Jia-Long-Gu-Mu-Li-Tang (Chai-Hu-Jia-Long-Gu-Mu-Li-Tang)	Shang-Han-Za-Bing-Lun (Shang-Han-Za-Bing-Lun)	Pinelliae Rhizoma Praeparatum 3, Jujubae Fructus 2, Bupleuri Radix 5, Zingiberis Rhizoma Recens 2, Ginseng Radix 2, Draconis Os Preparata 2, Cinnamomi Ramulus 2, Poria 2, Rhei Radix et Rhizoma 2.5, Ostreae Concha Preparata 2, Scutellariae Radix 2. (Daily dosage 26.5 g)	Harmonize and release the lesser yang, settle fright and tranquilize.	Cold damage with inappropriate purgation, fullness in the chest, vexation and fright, delirious speech, heaviness of the whole body, inability to turn sides.
		Treatise on Cold Damage and Miscellaneous Diseases			
	柴胡加龍骨牡蠣湯	傷寒雜病論			
184	Bao-Chan-Wu-You-Fang (Bao-Chan-Wu-You-Fang)	Yan-Fang-Sin-Bian (Yan-Fang-Xin-Bian)	Magnoliae Cortex 1.4, Artemisiae Argyi Folium 1.4, Angelicae Sinensis Radix 3, Chuanxiong Rhizoma 3, Schizonepetae Herba 1.6, Fritillariae Cirrhosae Bulbus 2, Cuscutae Semen 2, Notopterygii Rhizoma et Radix 1, Glycyrrhizae Radix et Rhizoma 1, Citri Immaturus Fructus 1.2, Paeoniae Alba Radix 4, Zingiberis Rhizoma Recens 3, Astragali Radix 1.6. (Daily dosage 26.2 g)	Tonify qi and blood, prevent abortion and stop flooding.	Threatened abortion.
		New Compilation of Experiential Prescriptions			
	保產無憂方	驗方新編			

No.	Formula Name	Reference	Ingredients	Effects	Indications
185	Dang-Guei-Yin-Zih (Dang-Gui-Yin-Zi)	Jheng-Jhih-Jhun- Sheng (Zheng-Zhi-Zhun-Sheng)	Angelicae Sinensis Radix 3, Paeoniae Alba Radix 3, Chuanxiong Rhizoma 3, Rehmanniae Radix Recens 3, Tribuli Fructus 3, Saposhnikoviae Radix 3, Schizonepetae Herba 3, Polygoni Multiflori Radix 1.5, Astragali Radix 1.5, Glycyrrhizae Radix et Rhizoma 1.5, Zingiberis Rhizoma Recens 4.5. (Daily dosage 30 g)	Tonify qi and replenish blood, dispel wind and eliminate dampness.	Scabies and urticaria, dampness toxin and itch.
		Standards for Diagnosis and Treatment			
	當歸飲子	證治準繩			
186	Ning-Sou-Wan (Ning-Sou-Wan) 《Wan》	Jhong-Guo-Yi-Syue-Da-Cih-Dian (Zhong-Guo-Yi-Xue-Da-Ci-Dian)	Platycodi Radix 3, Dendrobii Caulis 3, Pinelliae Rhizoma Praeparatum 3, Fritillariae Cirrhosae Bulbus 3, Perillae Fructus 3, Poria 3, Menthae Herba 2.3, Armeniacae Amarum Semen praeparatum 2.3, Mori Radicis Cortex 2.3, Citri Exocarpium Rubrum 1.5, Oryzae Germinatus Fructus 1.5, Glycyrrhizae Radix et Rhizoma 0.8. (Daily dosage 28.7 g)	Suppress and calm cough, clear the lung and resolve phlegm.	Cough with copious phlegm and rapid breathing, white and sticky phlegm or yellow phlegm.
		Chinese Medical Science Dictionary			
	寧嗽丸《丸》	中國醫學大辭典			
187	Er-Chen-Tang (Er-chen-Tang) (Wan)《Wan》	Tai-Ping-Huei-Min-He-Ji-Jyu-Fang (Tai-Ping-Hui-Min-He-Ji-Ju-Fang)	Pinelliae Rhizoma Praeparatum 8, Citri Reticulatae Pericarpium 8, Poria 5, Glycyrrhizae Radix et Rhizoma Praeparata cum Melle 2.5, Zingiberis Rhizoma Recens 2.5. (Daily dosage 26 g)	Dry dampness to resolve phlegm, regulate qi and harmonize the middle.	Phlegm-dampness and cough, copious and white phlegm, fullness and distention in the chest and diaphragm, nausea and vomiting, spleen-stomach disharmony.
		Prescription of Peaceful Benevolent Dispensary			
	二陳湯（丸）《丸》	太平惠民和劑局方			
188	Guei-Jhih-Shao-Yao-Jhih-Mu-Tang (Gui-Zhi-Shao-Yao-Zhi-Mu-Tang)	Jin-Kuei-Yao-Lyue (Jin-Kui-Yao-Lue)	Cinnamomi Ramulus 4, Paeoniae Alba Radix 3, Glycyrrhizae Radix et Rhizoma 2, Ephedrae Herba 2, Zingiberis Rhizoma Recens 5, Atractylodis Macrocephalae Rhizoma 5, Anemarrhenae Rhizoma 4,	Dispel wind and drain dampness, warm the meridian to relieve pain.	Wind-dampness arthralgia syndrome, painful limb joints, numbness of swollen feet, dizziness and shortness of
		Synopsis of Golden Cabinet			
	桂枝芍藥知母湯	金匱要略			

No.	Formula Name	Reference	Ingredients	Effects	Indications
			Saposhnikoviae Radix 4, Aconiti Lateralis Radix Preparata 2. (Daily dosage 31 g)		breath, vexation and feel vomiting.
189	Cang-Er-San (Cang-Er-San) 《San》	Jheng-Jhih-Jhun-Sheng (Zheng-Zhi-Zhun-Sheng)	Magnoliae Flos 8, Xanthii Fructus 4, Angelicae Dahuricae Radix 16, Menthae Herba 1, Allii Fistulosi Bulbus Recens 3, Camelliae Sinensis Folium 2. (Daily dosage 34 g)	Disperse wind to clear heat.	Sinusitis (persistent excessive flow of turbid nasal discharge).
		Standards for Diagnosis and Treatment			
	蒼耳散《散》	證治準繩	Add Allii Fistulosi Bulbus Recens and Camelliae Sinensis Folium q.s. to make pills in traditional formula.		
190	Chai-Hu-Cing-Gan-Tang (Chai-Hu-Qing-Gan-Tang)	Yi-Zong-Jin-Jian (Yi-Zong-Jin-Jian)	Bupleuri Radix 3, Rehmanniae Radix Recens 3, Angelicae Sinensis Radix 4, Paeoniae Rubra Radix 3, Chuanxiong Rhizoma 2, Forsythiae Fructus 2, Arctii Fructus 3, Scutellariae Radix 2, Gardeniae Fructus 2, Trichosanthis Radix 2, Glycyrrhizae Nudus or Glycyrrhizae Radix et Rhizoma 2, Saposhnikoviae Radix 2. (Daily dosage 30 g)	Clear the liver and disperse wind, purge fire and detoxicate.	The initial stage of carbuncle occurring on sideburns, wind-heat in liver-gallbladder and triple energizer, anger-fire syndrome.
		Golden Mirror of Medicine			
	柴胡清肝湯	醫宗金鑑			
191	Tuo-Li-Siao-Du-Yin (Tuo-Li-Xiao-Du-Yin)	Wai-Ke-Jheng-Zong (Wai-Ke-Zheng-Zong)	Ginseng Radix 3, Chuanxiong Rhizoma 3, Paeoniae Alba Radix 3, Astragali Radix 3, Angelicae Sinensis Radix 3, Atractylodis Macrocephalae Rhizoma 3, Lonicerae Flos 3, Poria 3, Angelicae Dahuricae Radix 1.5, Glycyrrhizae Radix et Rhizoma 1.5, Gleditsiae Spina 1.5, Platycodi Radix 1.5. (Daily dosage 30 g)	Tonify qi and replenish blood, expel the interior and disinfecting.	Sore and ulcer, dual deficiency of qi and blood, promote tissue regeneration and expel pus.
		Orthodox Manual of External Disease			
	托裏消毒飲	外科正宗			
192	Sang-Piao-Siao-San (Sang-Piao-Xiao-San)	Ben-Cao-Yan-Yi (Ben-Cao-Yan-Yi)	Mantidis Oötheca 3, Polygalae Radix 3, Acori Graminei Rhizoma 3, Draconis Os Preparata 3,	Harmonize and tonify the heart and kidney, secure essence to	Frequent urination, enuresis, spermatorrhea, absentminded

No.	Formula Name	Reference	Ingredients	Effects	Indications
	《San》 桑螵蛸散《散》	Amplification on Materia Medica 本草衍義	Ginseng Radix 3, Poria 3, Angelicae Sinensis Radix 3, Testudinis Carapax et Plastrum 3. (Daily dosage 24 g)	stop seminal emission.	essence-spirit and forgetfulness.
193	Wun-Cing-Yin (Wen-Qing-Yin) Jie-Du-Sih-Wu-Tang (Jie-Du-Si-Wu-Tang) 溫清飲(解毒四物湯)	Yi-Xue-Ru-Men (Yi-Xue-Ru-Men) Introduction to Medicine 醫學入門	Coptidis Rhizoma 3.5, Phellodendri Cortex 3.5, Scutellariae Radix 3.5, Gardeniae Fructus 3.5, Angelicae Sinensis Radix 3.5, Chuanxiong Rhizoma 3.5, Paeoniae Alba Radix 3.5, Rehmanniae Radix Praeparata 3.5. (Daily dosage 28 g)	Clear heat and resolve dampness, nourish blood and harmonize the nutrient.	Profuse menstruation, sallow complexion, stabbing pain of umbilicus and abdomen, flooding and spotting.
194	Jin-Suo-Gu-Jing-Wan (Jin-Suo-Gu-Jing-Wan) 《Wan》 金鎖固精丸《丸》	Yi-Fang-Ji-Jie (Yi-Fang-Ji-Jie) Collected Explanation on Prescriptions 醫方集解	Astragali Complanati Semen 6, Euryales Semen 6, Nelumbinis Stamen 6, Draconis Os Preparata 3, Ostreae Concha Preparata 3, Nelumbinis Semen 6. (Daily dosage 30 g)	Secure the kidney and astringe essence.	Kidney deficiency, seminal emission, night sweating, sore lumbar and tinnitus, fatigued limbs.
195	Bao-He-Wan (Bao-He-Wan) 《Wan》 保和丸《丸》	Dan-Si-Sin-Fa (Dan-Xi-Xin-Fa) Danxi`s Experiential Therapy 丹溪心法	Crataegi Fructus 12, Fermentata Medicata Massa 4, Pinelliae Rhizoma Praeparatum 4, Poria 4, Citri Reticulatae Pericarpium 2, Forsythiae Fructus 2, Raphani Semen 2. (Daily dosage 30 g)	Resolve accumulation and harmonize the stomach.	Food accumulation and stagnation, stuffiness and fullness in the chest and diaphragm, belching and acid regurgitation, abdominal pain and diarrhea.
196	Wei-Ling-Tang (Wei-Ling-Tang) 《San》	Jhong-Guo-Yi-Syue-Da-Cih-Dian (Zhong-Guo-Yi-Xue-Da-Ci-Dian) Chinese Medical Science Dictionary	Atractylodis Rhizoma 3, Magnoliae Cortex 3, Citri Reticulatae Pericarpium 3, Atractylodis Macrocephalae Rhizoma 3, Poria 3, Alismatis Rhizoma 2, Polyporus 2, Glycyrrhizae Radix et Rhizoma 1.2, Cinnamomi Cortex 1, Zingiberis	Dispel dampness to resolve stagnation, fortify the spleen and harmonize the middle.	Summerheat stroke and dampness damage, poor appetite, abdominal pain and diarrhea, vomiting and limb pain, inhibited urination.

No.	Formula Name	Reference	Ingredients	Effects	Indications
			Rhizoma Recens 3, Jujubae Fructus 2 (Daily dosage 26.2 g)		
	胃苓湯《散》	中國醫學大辭典	Without Zingiberis Rhizoma Recens and Jujubae Fructus in traditional formula.		
197	Ping-Wei-San (Ping-Wei-San) (Wan)《Wan》	Tai-Ping-Huei-Min-He-Ji-Jyu-Fang (Tai-Ping-Hui-Min-He-Ji-Ju-Fang)	Citri Reticulatae Pericarpium 5, Magnoliae Cortex 5, Glycyrrhizae Radix et Rhizoma Praeparata cum Melle 3, Atractylodis Rhizoma 8, Zingiberis Rhizoma Recens 3, Jujubae Fructus 2. (Daily dosage 26 g)	Dry dampness to fortify the spleen, regulate qi and harmonize the middle.	Spleen-stomach stagnation, distention and fullness in stomach duct and abdomen, nausea and vomiting, belching and acid regurgitation.
		Prescription of Peaceful Benevolent Dispensary			
	平胃散（丸）《丸》	太平惠民和劑局方			
198	Bai-Hu-Jia-Ren-Shen-Tang (Bai-Hu-Jia-Ren-Shen-Tang)	Shang-Han-Lun (Shang-Han-Lun)	Anemarrhenae Rhizoma 6, Gypsum Fibrosum 16, Glycyrrhizae Radix et Rhizoma Praeparata cum Melle 2, Oryzae Semen 8, Ginseng Radix 3. (Daily dosage 35 g)	Clear heat, replenish qi and engender fluid.	Dual damage of fluid and qi, polydipsia, summerheat stroke, fever and thirst, sweating and aversion to cold.
		Treatise on Febrile Diseases			
	白虎加人參湯	傷寒論			
199	Yi-Gan-San (Yi-Gan-San)	Jheng-Jhih-Jhun-Sheng (Zheng-Zhi-Zhun-Sheng)	Bupleuri Radix 2.5, Glycyrrhizae Radix et Rhizoma 2.5, Chuanxiong Rhizoma 4, Angelicae Sinensis Radix 5, Atractylodis Macrocephalae Rhizoma 5, Poria 5, Uncariae Ramulus cum Uncis 5. (Daily dosage 29 g)	Clear liver heat.	Dampness-heat in the liver meridian, fright palpitations and convulsions, vomiting and phlegm drool, distention and fullness in abdomen, poor appetite, insomnia.
		Standards for Diagnosis and Treatment			
	抑肝散	證治準繩			
200	Wun-Dan-Tang (Wen-Dan-Tang)	Jhong-Guo-Yi-Syue-Da-Cih-Dian (Zhong-Guo-Yi-Xue-Da-Ci-Dian)	Pinelliae Rhizoma 5, Bambusae Caulis In Taenia 5, Aurantii Immaturus Fructus 5, Citri Reticulatae Pericarpium 7.5, Zingiberis Rhizoma Recens 5, Glycyrrhizae Radix et Rhizoma 2.5, Poria 4, Jujubae	Warm the gallbladder and harmonize the stomach, dispel phlegm to stop vomiting.	Gallbladder deficiency and insomnia, phlegm-heat harassing upward, vexation of deficiency type and fright

No.	Formula Name	Reference	Ingredients	Effects	Indications
		Chinese Medical Science Dictionary	Fructus 1. (Daily dosage 35)		palpitations, bitter taste in the mouth and vomiting.
	溫膽湯	中國醫學大辭典			

◎The above formulas are mainly concentrated granules preparations, if《Wan》,《San》or《Dan》is given following the formulas names, it means the traditional pill, powder or pellet dosage formulas is also available.

Decoction (preparation) (湯劑 Tang): A liquid medicine prepared by boiling the ingredients in water, and taken after the dregs are removed.

Pill preparation (丸劑 Wan): A solid globular mass, coated or uncoated, made of finely powdered medicinals with a suitable excipient or binder.

Powder preparation (散劑 San): A medicated preparation in the form of discrete fine particles, for internal administration or topical application.

Paste preparation (膏劑 Gao): A general term for soft extract, ointment and adhesive plaster.

Pellet (丹劑 Dan): A medicated preparation in the form of small particles, usually made from minerals by sublimation for topical application, but some also for internal administration.

Monographs

Chinese Materia Medica

Official Names Lists

ABUTILI SEMEN 1
ACHYRANTHIS BIDENTATAE RADIX 1
ACONITI KUSNEZOFFII RADIX 2
ACONITI LATERALIS RADIX PREPARATUM 3
ACONITI RADIX 5
ACORI GRAMINEI RHIZOMA 6
ADENOPHORAE RADIX 7
AGASTACHIS HERBA 8
AGRIMONIAE HERBA 9
AILANTHI CORTEX 10
AKEBIAE CAULIS 10
ALBIZIAE CORTEX 11
ALISMATIS RHIZOMA 12
ALLII MACROSTEMONIS BULBUS 13
ALLII TUBEROSI SEMEN 14
ALPINIAE KATSUMADAI SEMEN 14
ALPINIAE OFFICINARI RHIZOMA 15
ALPINIAE OXYPHYLLAE FRUCTUS 17
AMOMI FRUCTUS 18
AMOMI ROTUNDUS FRUCTUS 19
AMPELOPSIS RADIX 20
ANEMARRHENAE RHIZOMA 21
ANGELICAE DAHURICAE RADIX 22
ANGELICAE PUBESCENTIS RADIX 23
ANGELICAE SINENSIS RADIX 24
ANISI STELLATI FRUCTUS 26
AQUILARIAE RESINATUM LIGNUM 26
ARCTII FRUCTUS 27
ARECAE PERICARPIUM 28
ARECAE SEMEN 29
ARISAEMATIS RHIZOMA 30
ARMENIACAE AMARUM SEMEN 31
ARNEBIAE RADIX 32
ARTEMISIAE ANNUAE HERBA 33
ARTEMISIAE ARGYI FOLIUM 34
ARTEMISIAE SCOPARIAE HERBA 35
ASARI RADIX ET RHIZOMA 36
ASPARAGI RADIX 37
ASTERIS RADIX ET RHIZOMA 38
ASTRAGALI COMPLANATI SEMEN 39
ASTRAGALI RADIX 39
ATRACTYLODIS MACROCEPHALAE RHIZOMA 41
ATRACTYLODIS RHIZOMA 42
AUCKLANDIAE RADIX 42
AURANTII IMMATURUS FRUCTUS 44
BAMBUSAE CAULIS IN TAENIA 45
BAMBUSAE CONCRETIO SILICEA 45
BAPHICACANTHI CUSIAE RHIZOMA ET RADIX 46
BELAMCANDAE RHIZOMA 46
BENINCASAE SEMEN 47
BLETILLAE RHIZOMA 48
BOMBYCIS FAECES 49
BOMBYX BATRYTICATUS 50
BORNEOLUM 50
BOVIS CALCULUS 51
BUDDLEJAE FLOS 52
BUPLEURI RADIX 52
CANNABIS FRUCTUS 54
CARTHAMI FLOS 55
CARYOPHYLLI FLOS 55
CASSIAE SEMEN 56
CATECHU 58
CELOSIAE SEMEN 59
CHAENOMELIS FRUCTUS 59
CHEBULAE FRUCTUS 60
CHINENSIS GALLA 61
CHRYSANTHEMI FLOS 62
CHUANXIONG RHIZOMA 63
CIBOTII RHIZOMA 64
CICADAE PERIOSTRACUM 65
CIMICIFUGAE RHIZOMA 66
CINNAMOMI CORTEX 67
CINNAMOMI RAMULUS 68
CIRSII HERBA 69
CIRSII JAPONICI HERBA ET RADIX 69
CISTANCHES HERBA 71
CITRI EXOCARPIUM RUBRUM 72
CITRI GRANDIS EXOCARPIUM 73

CITRI IMMATURUS FRUCTUS 74
CITRI RETICULATAE PERICARPIUM 75
CITRI RETICULATAE PERICARPIUM VIRIDE 76
CITRI SARCODACTYLIS FRUCTUS 78
CLEMATIDIS CAULIS 78
CLEMATIDIS RADIX ET RHIZOMA 79
CNIDII FRUCTUS 80
CODONOPSIS RADIX 82
COICIS SEMEN 83
COPTIDIS RHIZOMA 83
CORDYCEPS 84
CORNI SARCOCARPIUM 85
CORYDALIS RHIZOMA 86
CRATAEGI FRUCTUS 88
CROCI STIGMA 89
CROTONIS SEMEN 90
CURCULIGINIS RHIZOMA 91
CURCUMAE LONGAE RHIZOMA 92
CURCUMAE RADIX 93
CURCUMAE RHIZOMA 94
CUSCUTAE SEMEN 95
CYATHULAE RADIX 96
CYNANCHI ATRATI RADIX ET RHIZOMA 97
CYNANCHI STAUNTONII RHIZOMA ET RADIX 98
CYNOMORII HERBA 99
CYPERI RHIZOMA 99
DENDROBII CAULIS 100
DESMODII STYRACIFOLII HERBA 102
DIANTHI HERBA 104
DICTAMNI RADICIS CORTEX 105
DIOSCOREAE HYPOGLAUCAE RHIZOMA 105
DIOSCOREAE RHIZOMA 106
DIPSACI RADIX 107
DRACONIS SANGUIS 108
ECKLONIAE THALLUS 108
LAMINARIAE THALLUS 108
ECLIPTAE HERBA 109
EPHEDRAE HERBA 110
EPIMEDII FOLIUM 112
EQUISETI HIEMALIS HERBA 113
ERIOBOTRYAE FOLIUM 114
ERIOCAULI FLOS 115
EUCOMMIAE CORTEX 116
EUPATORII HERBA 116
EURYALES SEMEN 117
EVODIAE FRUCTUS 118
FARFARAE FLOS 119
FOENICULI FRUCTUS 120
FORSYTHIAE FRUCTUS 121
FRAXINI CORTEX 122
FRITILLARIAE THUNBERGII BULBUS 123
GALLI GIGERIAE ENDOTHELIUM CORNEUM 124
GARDENIAE FRUCTUS 124
GASTRODIAE RHIZOMA 126
GECKO 127
GENTIANAE MACROPHYLLAE RADIX 127
GENTIANAE RADIX ET RHIZOMA 130
GINKGO SEMEN 131
GINSENG RADIX 132
GLEDITSIAE ABNORMALIS FRUCTUS 134
GLEDITSIAE FRUCTUS 135
GLEDITSIAE SPINA 135
GLEHNIAE RADIX 136
GLYCYRRHIZAE RADIX ET RHIZOMA 136
GRANATI PERICARPIUM 138
GYPSUM FIBROSUM 139
HAEMATITUM 139
HALIOTIDIS CONCHA 139
HEDYOTIDIS DIFFUSAE HERBA 141
HEDYSARI RADIX 141
HIRUDO 142
HOMALOMENAE RHIZOMA 143
HORDEI GERMINATUS FRUCTUS 143
HOUTTUYNIAE HERBA 144
IMPERATAE RHIZOMA 145
INULAE FLOS 146
ISATIDIS FOLIUM 147
ISATIDIS RADIX 148
JUJUBAE FRUCTUS 148
JUNCI MEDULLA 149

KAEMPFERIAE RHIZOMA 149
KAKI CALYX 150
KANSUI RADIX 151
KOCHIAE FRUCTUS 152
LABLAB ALBUM SEMEN 153
LEONURI FRUCTUS 154
LEONURI HERBA 154
LEPIDII SEMEN 155
DESCURAINIAE SEMEN 155
LIGUSTICI RHIZOMA ET RADIX 156
LIGUSTRI LUCIDI FRUCTUS 158
LILII BULBUS 158
LINDERAE RADIX 159
LIQUIDAMBARIS FRUCTUS 160
LONICERAE FLOS 161
LONICERAE JAPONICAE CAULIS 163
LOPHATHERI CAULIS ET FOLIUM 164
LYCII FRUCTUS 165
LYCII RADICIS CORTEX 166
LYCOPI HERBA 167
LYCOPODII HERBA 168
LYGODII SPORA 168
LYSIMACHIAE HERBA 169
MAGNOLIAE CORTEX 170
MAGNOLIAE FLOS 172
MALVAE FRUCTUS 173
MANTIDIS OÖTHECA 174
MENTHAE HERBA 175
MERETRICIS ET CYCLINAE CONCHA 176
MOMORDICAE FRUCTUS 176
MORI FOLIUM 177
MORI RADICIS CORTEX 178
MORI RAMULUS 179
MORINDAE OFFICINALIS RADIX 180
MOSLAE HERBA 181
MOUTAN RADICIS CORTEX 181
MUME FRUCTUS 183
MYRISTICAE SEMEN 184
MYRRHA 185
NATRII SULFAS 185
NATURALIS INDIGO 186
NELUMBINIS FOLIUM 187
NELUMBINIS RHIZOMATIS NODUS 188
NELUMBINIS SEMEN 189
NOTOGINSENG RADIX 189
NOTOPTERYGII RHIZOMA ET RADIX 191
OLIBANUM 192
OPHIOPOGONIS RADIX 193
ORYZAE GERMINATUS FRUCTUS 193
OSTREAE CONCHA 194
PAEONIAE ALBA RADIX 195
PAEONIAE RUBRA RADIX 196
PANACIS QUINQUEFOLII RADIX 197
PERILLAE CAULIS 199
PERILLAE FOLIUM 200
PERILLAE FRUCTUS 200
PERSICAE SEMEN 201
PEUCEDANI RADIX 203
PHARBITIDIS SEMEN 204
PHELLODENDRI CORTEX 205
PHERETIMA 206
PHOTINIAE FOLIUM 207
PHRAGMITIS RHIZOMA 208
PINELLIAE RHIZOMA 208
PIPERIS FRUCTUS 209
PLANTAGINIS HERBA 210
PLANTAGINIS SEMEN 211
PLATYCLADI RAMULUS ET FOLIUM 213
PLATYCLADI SEMEN 213
PLATYCODI RADIX 214
POGOSTEMONIS HERBA 215
POLYGALAE RADIX 216
POLYGONATI ODORATI RHIZOMA 216
POLYGONATI RHIZOMA 217
POLYGONI CUSPIDATI RHIZOMA ET RADIX 218
POLYGONI MULTIFLORI CAULIS 219
POLYGONI MULTIFLORI RADIX 220
POLYPORUS 221
PORIA 222
PORTULACAE HERBA 223

PRUNELLAE SPICA 223
PSEUDOSTELLARIAE RADIX 224
PSORALEAE FRUCTUS 225
PUERARIAE RADIX 226
PULSATILLAE RADIX 227
PYRROSIAE FOLIUM 228
QUISQUALIS FRUCTUS 230
RAPHANI SEMEN 231
REHMANNIAE RADIX 231
RHAPONTICI RADIX 233
RHEI RADIX ET RHIZOMA 234
ROSAE LAEVIGATAE FRUCTUS 235
RUBI FRUCTUS 236
RUBIAE RADIX ET RHIZOMA 237
SALVIAE MILTIORRHIZAE RADIX ET RHIZOMA 238
SANGUISORBAE RADIX 239
SAPOSHNIKOVIAE RADIX 241
SAPPAN LIGNUM 241
SCHISANDRAE FRUCTUS 242
SCHIZONEPETAE HERBA 243
SCORPIO 244
SCROPHULARIAE RADIX 245
SCUTELLARIAE BARBATAE HERBA 246
SCUTELLARIAE RADIX 247
SELAGINELLAE HERBA 248
SENNAE FOLIUM 249
SEPIAE ENDOCONCHA 250
SESAMI NIGRUM SEMEN 251
SIEGESBECKIAE HERBA 251
SINAPIS ALBAE SEMEN 253
SMILACIS GLABRAE RHIZOMA 254
SOJAE SEMEN PREPARATUM 255
SOPHORAE FLAVESCENTIS RADIX 255
SOPHORAE IMMATURUS FLOS 256
SOPHORAE TONKINENSIS RADIX 257
SPARGANII RHIZOMA 259
SPATHOLOBI CAULIS 259
STEMONAE RADIX 260
STRYCHNI SEMEN 262
TALCUM 263
TARAXACI HERBA 263
TAXILLI HERBA 264
TETRAPANACIS MEDULLA 265
TOOSENDAN FRUCTUS 265
TRACHELOSPERMI CAULIS CUM FOLIUM 267
TRIBULI FRUCTUS 267
TRICHOSANTHIS RADIX 268
TRICHOSANTHIS SEMEN 269
TRIONYCIS CARAPAX 270
TRITICI LEVIS FRUCTUS 270
TROGOPTERORI FAECES 271
TSAOKO FRUCTUS 271
TYPHAE POLLEN 272
UNCARIAE RAMULUS CUM UNCIS 273
VACCARIAE SEMEN 274
VIGNAE SEMEN 275
VIOLAE HERBA 275
VISCI HERBA 276
VITICIS SIMPLICIFOLIAE FRUCTUS 277
VLADIMIRIAE RADIX 278
XANTHII FRUCTUS 279
ZANTHOXYLI PERICARPIUM 280
ZINGIBERIS RHIZOMA 281
ZIZIPHI SPINOSAE SEMEN 282

INDEXES

Official Names 285
Chinese Names 290
Names in Tongyong Pinyin Form 294
Names in Hanyu Pinyin Form 299
English Names 304
Scientific Names 309

ABUTILI SEMEN
苘麻子
Cing Ma Zih / Qing Ma Zi
Chingma Abutilon Seed

Chingma abutilon seed is the dried ripe seed of *Abutilon theophrasti* Medic. (Fam. Malvaceae).
It contains not less than 5.0% of dilute ethanol-soluble extractives and not less than 5.0% of water extractives.

Description: Triangular or flattened reniform, relatively acute at one edge, 3~5 mm in length, about 3 mm in width. Externally grayish-brown, with grayish-brown tomenta, a pale brown linear hilum at the dented part. Testa hard, with cylindrical radicle inside, cotyledons 2, folded into W-shaped, inserted into the endosperm. Odor, slight; taste, weak.

Microscopic identification:

1. **Transverse section:** Epidermis 1 layer, flattened-rectangular, occasionally differentiated to unicellular non-glandular hairs, wall slightly thickened and lignified. Hypodermis 1 layer, slightly elongated radially. Palisade cells cylindrical, 75~88 μm in length, heavily thick-walled, linear lumina visible at the upper part, the terminal end expended, containing small globular crystals. Pigment cells 4~5 layers, containing yellowish-brown or reddish-brown contents. Endosperm and cotyledon cells containing fatty oil droplets and aleurone grains, cotyledon cells also containing a few of fine clusters of calcium oxalate.

Thin layer chromatographic identification test (General rule 1010.3):

1. Sample solution: Add 0.1 g of powdered sample to 2 mL of ethanol, macerate with 70℃ warm water for 20 minutes then filter, evaporate the filtrate to dryness in a water bath, dissolve the residue in 0.5 mL of mixture of chloroform and ethanol (1:1).
2. Reference drug solution: Use 0.1 g of the reference drug as the same method described above.
3. Procedure: Use silica gel F_{254} as the coating substance and a solution of petroleum ether (30~60 ℃) and ethyl ether (7:4) as the developing solvent. Apply 5 μL of each of the above solutions to the plate. Once the top of the solvent rise to about 5~10 cm from the origin, dry in air and expose to iodine vapor until the spots become visible. The spots in the chromatogram obtained from the sample solution correspond in R_f values and color to the spots in the chromatogram obtained from the reference drug solution.

Impurities and other requirements:

1. Loss on drying: Not more than 12.0% under heating at 105℃ for 5 hours (General rule 5008).
2. Total ash: Not more than 7.0% (General rule 5004).
3. Acid-insoluble ash: Not more than 2.0% (General rule 5004).

Assay:

1. Water extractives: Carry out the method for determination of water extractives (General rule 5006).
2. Dilute ethanol extractives: Carry out the method for determination of dilute ethanol-soluble extractives (General rule 5006).

Storage: Refrigerate or store in a cool and dry place.
Usage: Dampness-draining diuretic medicinal.
Dosage: 3~10 g.

ACHYRANTHIS BIDENTATAE RADIX
牛膝
Niou Si / Niu Xi
Twotooth Achyranthes Root

Twotooth achyranthes root is the dried root of *Achyranthes bidentata* Blume (Fam. Amaranthaceae), commonly known as "Huai Niou Shi".
It contains not less than 55.0% of dilute ethanol-soluble extractives and not less than 57.0% of water extractives.

Description: Slender cylindrical, earth yellow or grayish-yellow, slightly smooth, straight or slightly curved, 15~90 cm in length, 0.2~1 cm in diameter. Externally with fine longitudinal wrinkles and protuberant transverse lenticels, obvious branch root and fine root traces. Texture hard and fragile, easily broken, fracture even, slightly translucent, pale brown, the center of wood fine and yellow-white, the outer scattered with many yellowish-white spotted vascular bundles arranged in 2~4 whorls. Odor, slight; taste, slightly sweet, slightly bitter and astringent.

Microscopic identification:

1. **Transverse section:** Cork composed of 3~7 rows of flat cork cells. Cortex composed of dozens of layers of flat-rectangular parenchymatous cells. The major portion of the root is occupied by stele, collateral vascular bundles arranged in 2~4 interrupted whorls; xylem composed of vessels and xylem fibers; vessels relatively small in the outermost whorl, but relatively large inward. Cambium nearly in a ring. Primary xylem located in the central root, usually fissured, mainly pitted and reticulate vessels. Parenchymatous cells contain sandy crystals of calcium oxalate.
2. **Powder:** Brownish-yellow. Vessels mainly pitted or reticulated, 80~110 μm in diameter. Parenchymatous cells contain some sandy crystals of calcium oxalate, triangle or subsquare, about 7 μm in diameter. Walls of xylem parenchymatous cells singly pitted or reticulate thickened.

Thin layer chromatographic identification test (General rule 1010.3):

1. Sample solution: Add 1.0 g of powdered sample to 10 mL of ethanol, ultrasonicate for 30 minutes, cool and filter, and make up to 10 mL.
2. Reference drug solution: Use 1.0 g of the reference drug as the same method described above.
3. Procedure: Use silica gel F_{254} as the coating substance and a solution of *n*-hexane, ethyl acetate (4:1) as the developing solvent. Apply 10 μL of each of the above solutions to the plate. Once the top of the solvent rise to about 5~10 cm from the origin, dry in air. Spray with a solution of sulfuric acid in ethanol (1:1) (H_2SO_4/EtOH TS) and heat until the spots become visible. Examine under visible light. The spots in the chromatogram obtained from the sample solution correspond in R_f values and color to the spots in the chromatogram obtained from the reference drug solution.

Impurities and other requirements:

1. Total ash: Not more than 6.0% (General rule 5004).
2. Acid-insoluble ash: Not more than 1.0% (General rule 5004).
3. Total heavy metals: Not more than 10.0 ppm (General rule 3005).
4. Arsenic (As): Not more than 5.0 ppm (General rule 3006, 3049, 3050).

Assay:

1. Water extractives: Carry out the method for determination of water extractives (General rule 5006).
2. Dilute ethanol extractives: Carry out the method for determination of dilute ethanol-soluble extractives (General rule 5006).

Storage: Store in a cool and dry place, and protect from moisture and oil seeping.
Usage: Blood-activating and stasis-dispelling medicinal.
Dosage: 5~12 g.

ACONITI KUSNEZOFFII RADIX
草烏
Cao Wu / Cao Wu
Kusnezoff Monkshood Root Tuber

Kusnezoff monkshood root tuber is the dried root tuber of *Aconitum kusnezoffii* Reichb. (Fam. Ranunculaceae). It contains not less than 2.0% of dilute ethanol-soluble extractives, not less than 4.0% of water extractives and among 0.10~0.50% of the total amount of aconitine, hypaconitine and mesaconitine.

Description: Irregularly long-conical, slightly curved, 2~7 cm in length, 1~3 cm in diameter. Apex usually remained with stem base or its scar. Externally grayish-brown or dark brown, crumpled and uneven, with dotted rootlet scars and several tubercular lateral roots. Texture hard, fracture grayish-white or dark gray, with fissures, cambium ring polygonal, pith relatively large or hollow. Odor, slight; taste, pungent and numb.

Microscopic identification:

1. **Transverse section:** Metaderm composed of 7~8 rows of yellowish-brown suberized cells. Cortex contains subrectangular or suboblong stone cells, singly scattered or 2~5 in a group, with large lumen. Endodermis distinct. Phloem broad, usually with irregular clefts, a few stone cells scattered near endodermis, sieve tube groups scattered. Cambium in a ring, cells irregularly polygonal or subrounded. Xylem vessels 1~4 rows or several in groups, located inside of cambium corners, some containing brownish-yellow contents, vessels mainly pitted and reticulate, a few spiral and scalariform vessels occasionally found. Pith relatively large, parenchymatous cells filled with starch granules.
2. **Powder:** Grayish to brown. Simple starch granules subrounded, 2~23 μm in diameter; compound granules composed of 2~16 components. Stone cells subrectangular or suboblong, 60~160 μm in length, 25~50 μm in width, walls varying in thickness, thick wall with distinct striations, some containing brown contents. Metaderm cells brown, subsquare or subpolygonal in surface view, wall unevenly thickened, some with protuberance inward the lumina. Vessels mainly pitted and reticulate, 25~130 μm in diameter, the terminal with round protuberance, vessel elements connected.

Thin layer chromatographic identification test (General rule 1010.3):

1. Sample solution: Add 2.0 g of powdered sample to 2 mL of ammonia solution, add 20 mL of ethyl ether, ultrasonicate for 30 minutes and filter, evaporate the filtrate to dryness, and dissolve the residue in 1 mL of dichloromethane.
2. Reference drug solution: Use 2.0 g of the reference drug as the same method described above.
3. Reference standard solution: Weigh accurately a quantity of aconitine and dissolve in a solution of isopropanol and chloroform (1:1) to produce a solution containing 1.0 mg per mL.
4. Procedure: Use silica gel F_{254} as the coating substance and a solution of *n*-hexane, ethyl acetate and methanol (6.4:3.6:1) as the developing solvent. Apply 10 μL of each of the above solutions to the plate, developing in a chamber pre-equilibrated with ammonia vapor for 20 minutes. Once the top of the solvent rise to about 5~10 cm from the origin, dry in air. Spray with modified Dragendorff's reagent, and examine under visible light. The spots in the chromatogram obtained from the sample solution correspond in R_f values and color to the spots in the chromatogram

obtained from the reference drug solution and the reference standard solution.

Impurities and other requirements:

1. Total ash: Not more than 7.0% (General rule 5004).
2. Acid-insoluble ash: Not more than 2.0% (General rule 5004).

Assay:

1. Aconitine, hypaconitine and mesaconitine:
   (1) Mobile phase: A solution of acetonitrile and tetrahydrofuran (25:15) as the mobile phase A, and solution of 0.1 mol/L ammonium acetate (add 0.5 mL of glacial acetic acid per 1,000 mL) as the mobile phase B.
   (2) Reference standard solution: Weigh accurately a quantity of aconitine, hypaconitine, and mesaconitine and dissolve in a solution of isopropanol and chloroform (1:1) to produce a solution containing 0.3 mg, 0.18 mg and 1.0 mg per mL of each.
   (3) Sample solution: Weigh accurately 2.0 g of powdered sample, transfer to a conical flask with stopper, add 3 mL of ammonia solution, add accurately 50 mL of a solution of isopropanol and ethyl acetate (1:1), weigh, ultrasonicate for 30 minutes, cool, weigh again, replenish the loss of the weight with a solution of isopropanol and ethyl acetate (1:1), mix well and filter. Measure accurately 25 mL of the successive filtrate and evaporate to dryness under reduced pressure below 40℃. Dissolve exactly the residue in 3 mL of the mixture of isopropanol and chloroform (1:1), stopper tightly, mix well, filter and use the successive filtrate.
   (4) Chromatographic system: The liquid chromatography is equipped with an ultraviolet absorption photometer (wavelength: 235 nm) and a column packed with octadecylsilanized silica gel. The number of theoretical plates of the peak of mesaconitine should not be less than 2,000. Program the chromatographic system as follows.

Time (min)	Mobile phase A (%)	Mobile phase B (%)
0~48	15→26	85→74
48~48.1	26→35	74→65
48.1~58	35	65
58~65	35→15	65→85

   (5) Procedure: Inject accurately 10 μL of each of the reference standard solution and the sample solution into the liquid chromatography apparatus, and calculate the content.
2. Water extractives: Carry out the method for determination of water extractives (General rule 5006).
3. Dilute ethanol extractives: Carry out the method for determination of dilute ethanol-soluble extractives (General rule 5006).

Storage: Store in a ventilated and dry place, and protect from insects.
Usage: Middle-warming and cold-dispelling medicinal.
Dosage: 1.5~3 g, generally processed before application.
Precaution and warning: Unprocessed one toxic, avoid using for oral administration. Forbidden during pregnancy. Incompatible with Fritillariae Thunbergii Bulbus, Pinelliae Rhizoma, Bletillae Rhizoma, Ampelopsis Radix, Trichosanthis Radix, Trichosanthis Semen and Trichosanthis Fructus.

ACONITI LATERALIS RADIX PREPARATUM
附子
Fu Zih / Fu Zi
Monkshood Daughter Root Tuber

Monkshood daughter root tuber is the dried lateral root tuber of *Aconitum carmichaeli* Debx. (Fam. Ranunculaceae). According to the different process methods, monkshood daughter root tuber separate into "Yan Fu Zi", "Hei Shun Pian" and "Bai Fu Pian", etc.
It contains not less than 0.010% of the total amount of benzoylmesaconine, benzoylaconine, and benzoylhypaconine and not more than 0.020% of diester-alkaloids, calculated with the total amount of mesaconitine, hypaconitine and aconitine.

Description: Conical, varying in sizes, about 1.5~5 cm in length, about 1.5~4 cm in diameter. Externally grayish-brown, with fine wrinkles, apex with dented bud scars, lateral with the scars of parent root, with numerous tubercle, commonly known as "Jiau Ding". Texture hard, fracture grayish-white, starchy, with an irregular cambium ring in transverse section, polygonal. Odor, slight; taste, pungent.

1. Yan Fu Zi (salted aconite daughter root tuber): Larger, about 4~7 cm in length, about 3~5 cm in diameter. Externally grayish-black, covered with fine powder of salt. Texture heavy in weight. Grayish-brown in transverse section, with irregular striations or hollow center filled in salt. Odorless; taste, salty, numb and pungent.
2. Hei Shun Pian (black slice): Irregular longitudinal slices, the upper portion board and the lower portion narrow, about 2~5 mm thick. The outer bark blackish-brown, fracture yellowish-brown, oily and lustrous, translucent, with longitudinal vascular bundles. Texture hard and fragile. Odor, slight; taste, weak.

3. Bai Fu Pian (white slice): Transverse slices, without outer bark, about 3~5 mm thick, yellowish-white, translucent, with vascular bundles.

Microscopic identification:

1. **Transverse section:** Metaderm composed of 1 row of sclerenchymatous cells, varying in shape, primary cortex composed of 8~13 rows of relatively thickened cells, suboblong, subtriangular or subpolygonal, with intercellular spaces. Endodermal cells relatively small, walls yellow and slightly lignified. Phloem relatively broad, parenchymatous cells filled with starch granules, scattered with small sieve tube groups. Cambium composed of 2~4 rows of flat cells. Xylem slightly arranged in V-shaped, arranged irregularly at the inner side of cambium; xylem cells polygonal, with intercellular spaces, containing starch granules. Pith in the center, cells filled with starch granules.
2. **Powder:** Yellowish-white. Starch granules extremely abundant, simple granules spheroidal, long-rounded or reniform, 3~22 μm in diameter; compound granules composed of 2~7 components. Metaderm cells subpolygonal in surface view, anticlinal walls irregularly thickened and some with tubercularly thickened walls and intruding into lumina. Stone cells relatively rare, subsquare or subrectangular. Vessels mainly scalariform, about 10~48 μm in diameter.

Thin layer chromatographic identification test (General rule 1010.3):

1. Sample solution: Add 5.0 g of powdered sample to 20 mL of ethanol, heat under reflux for 60 minutes, filter and evaporate the filtrate to 1.0 mL.
2. Reference drug solution: Use 5.0 g of the reference drug as the same method described above.
3. Procedure: Use silica gel F_{254} as the coating substance and a solution of *n*-butanol, glacial acetic acid and water (7:1:2) as the developing solvent. Apply 5 μL of each of the above solutions to the plate. Once the top of the solvent rise to about 5~10 cm from the origin, dry in air. Spray with a solution of *p*-anisaldehyde in sulfuric acid (*p*-Anisaldehyde/H_2SO_4 TS) and heat at 105℃ until the spots become visible. The spots in the chromatogram obtained from the sample solution correspond in R_f values and color to the spots in the chromatogram obtained from the reference drug solution.

Impurities and other requirements:

1. Diester-alkaloids (mesaconitine, hypaconitine, aconitine):
   (1) Mobile phase: A solution of acetonitrile and tetrahydrofuran (25:15) as the mobile phase A, and a solution of 0.1 mol/L ammonium acetate (0.5 mL glacial acetic acid per 1,000 mL) as the mobile phase B.
   (2) Reference standard solution: Weigh accurately a quantity of mesaconitine, hypaconitine and aconitine and dissolve in a solution of isopropanol and dichloromethane (1:1) to produce a solution containing 5 μg per mL of each.
   (3) Sample solution: Weigh accurately 2.0 g of powdered sample, transfer to a conical flask with stopper, add 3 mL of ammonia solution, accurately add 50 mL of a solution of isopropanol and ethyl acetate (1:1), weigh, ultrasonicate for 30 minutes, cool, weigh again, replenish the loss of the weight with a solution of isopropanol and ethyl acetate (1:1), mix well, filter, transfer 25 mL of successive filtrate, evaporate the filtrate to dryness on 40℃, dissolve the residue in a solution of isopropanol and dichloromethane (1:1) to 3 mL, filter and use the filtrate.
   (4) Chromatographic system: The liquid chromatography is equipped with an ultraviolet absorption photometer (wavelength: 235 nm) and a column packed with octadecylsilanized silica gel. Program the chromatographic system as follows. The number of theoretical plates of the peak of mesaconitine should not be less than 3,000.

Time (min)	Mobile phase A (%)	Mobile phase B (%)
0～48	15→26	85→74
48～49	26→35	74→65
49～58	35	65
58～65	35→15	65→85

   (5) Procedure: Inject accurately 10 μL of each of the reference standard solution and the sample solution into the liquid chromatography apparatus, and calculate the content.
2. Total heavy metals: Not more than 10.0 ppm (General rule 3005).
3. Arsenic (As): Not more than 5.0 ppm (General rule 3006, 3049, 3050).

Assay:

1. Benzoylmesaconine, benzoylaconine, and benzoylhypaconine:
   (1) Mobile phase: A solution of acetonitrile and tetrahydrofuran (25:15) as the mobile phase A, and a solution of 0.1 mol/L ammonium acetate (0.5 mL glacial acetic acid per 1,000 mL) as the mobile phase B.
   (2) Reference standard solution: Weigh accurately a quantity of benzoylmesaconine, benzoylaconine, benzoylhypaconine and dissolve in a solution of isopropanol and

dichloromethane (1:1) to produce a solution containing 10 μg per mL of each.

(3) Sample solution: Weigh accurately 2.0 g of powdered sample, transfer to a conical flask with stopper, add 3 mL of ammonia solution, accurately add 50 mL of a solution of isopropanol and ethyl acetate (1:1), weigh, ultrasonicate for 30 minutes, cool, weigh again, replenish the loss of the weight with a solution of isopropanol and ethyl acetate (1:1), mix well, filter, transfer 25 mL of successive filtrate, evaporate the filtrate to dryness on 40℃, dissolve the residue in a solution of isopropanol and dichloromethane (1:1) to 3 mL, filter and use the filtrate.

(4) Chromatographic system: The liquid chromatography is equipped with an ultraviolet absorption photometer (wavelength: 235 nm) and a column packed with octadecylsilanized silica gel. Program the chromatographic system as follows. The number of theoretical plates of the peak of benzoylmesaconine should not be less than 3,000.

Time (min)	Mobile phase A (%)	Mobile phase B (%)
0～48	15→26	85→74
48～49	26→35	74→65
49～58	35	65
58～65	35→15	65→85

(5) Procedure: Inject accurately 10 μL of each of the reference standard solution and the sample solution into the liquid chromatography apparatus, and calculate the content.

Storage: Yan Fu Zi should be stored in a dry place and preserved in a well-closed container; Hei Shun Pian and Bai Fu Pian should be stored in a cool and dry place, and protected from mold and insects.
Usage: Interior-warming medicinal.
Dosage: 3~15 g.
Precaution and warning: Unprocessed one toxic, using processed one for oral administration. Forbidden during pregnancy.

ACONITI RADIX
川烏
Chuan Wu / Chuan Wu
Common Monkshood Mother Root Tuber

Common monkshood mother root tuber is the dried main root tuber of *Aconitum carmichaeli* Debx. (Fam. Ranunculaceae).

It contains not less than 10.0% of dilute ethanol-soluble extractives, not less than 10.0% of water extractives and among 0.050~0.17% of the total amount of aconitine, hypaconitine and mesaconitine.

Description: Long conical, slightly curved, 2~7.5 cm in length, 1.5~3 cm in diameter. Externally grayish-brown, with coarse longitudinal wrinkles and conical protuberant rootlets (undeveloped monkshood daughter root tuber), apex occasionally remained with stem base. Texture compact, fracture grayish-white, starchy. Odor, slight; taste, pungent and numb.

Microscopic identification:

1. **Transverse section:** Metaderm composed of brown suberized cells; stone cells occasionally scattered in cortical parenchyma as individual or in groups, subrectangular, square, or oblong, each with a large lumen; endodermis indistinct. Sieve tube groups scattered in phloem; fiber bundles occasionally present in the inner part of phloem. Cambium ring subpolygonal, one or more abnormal vascular bundles occasional present inside or outside. Vessels in xylem composed of several rows, arranged radially or V-shape. Pith distinct. Parenchymatous cells filled with starch granules.
2. **Powder:** Grayish-yellow. Starch granules numerous, simple granules spheroidal, oblong or reniform, 3~22 μm in diameter; compound granules composed of 2~15 components. Metaderm cells subrectangular or long-polygonal in surface view, anticlinal walls slightly thickened, occasionally curved and sinuous in lateral wall, some with walls tubercularly thickened and intruding into lumina. Stone cells relatively less, subrectangular, subsquare, polygonal or with one side oblique, 49~117 μm in diameter, walls 4~13 μm thick; pits sparse. Bordered-pitted vessels 29~70 μm in diameter, some vessel cells thick and short; distorted and crisscrossed, pits dense. Fibers few, slat-shaped, some with short branches; pits cruciate, V-shaped or bordered-pitted.

Spectrophotometry (General rule 1008):

1. Take 0.5 g of powdered sample, add a 10 mL solution of ethyl ether and a 0.5 mL solution of ammonia, shake for 10 minutes and filter. Place the filtrate in a separating funnel, add 20 mL of sulfuric acid (0.23 mol/L), shake and elute, separately take a quantity of acid liquid, add water, measure the max absorption appear at 231 nm.

Thin layer chromatographic identification test (General rule 1010.3):

1. Sample solution: Add 2.0 g of powdered sample moisten with 2 mL of ammonia solution, add 20 mL of ethyl ether, ultrasonicate for 30 minutes and filter, evaporate the filtrate to dryness, dissolve the residue in 1 mL of dichloromethane.

2. Reference drug solution: Use 1.0 g of the reference drug as the same method described above.
3. Reference standard solution: Weigh accurately a quantity of aconitine, hypaconitine, and mesaconitine and dissolve in a solution of isopropanol and chloroform (1:1) to produce a solution containing 1.0 mg per mL of each.
4. Procedure: Use silica gel F_{254} as the coating substance and a solution of *n*-hexane, ethyl acetate and methanol (6.4:3.6:1) as the developing solvent. Apply 5 μL of each of the above solutions to the plate, developing in a chamber pre-equilibrated with the vapor of ammonia for 20 minutes. Once the top of the solvent rise to about 5~10 cm from the origin, dry in air. Spray with modified Dragendorff's reagent. The spots in the chromatogram obtained from the sample solution correspond in R_f values and color to the spots in the chromatogram obtained from the reference drug solution and the reference standard solution.

Impurities and other requirements:
1. Loss on drying: Not more than 12.0% under heating at 105℃ for 5 hours (General rule 5008).
2. Total ash: Not more than 8.0% (General rule 5004).
3. Acid-insoluble ash: Not more than 2.0% (General rule 5004).

Assay:
1. Aconitine, hypaconitine and mesaconitine:
   (1) Mobile phase: A solution of acetonitrile and tetrahydrofuran (25:15) as the mobile phase A, and a solution of 0.1 mol/L ammonium acetate (add 0.5 mL glacial acetic acid in each 1,000 mL solution) as the mobile phase B.
   (2) Reference standard solution: Weigh accurately a quantity of aconitine, hypaconitine, and mesaconitine and dissolve in a solution of isopropyl and chloroform (1:1) to produce a solution containing 50 μg per mL of each.
   (3) Sample solution: Weigh accurately 2.0 g of powdered sample, transfer to a conical flask with stopper, add 3 mL of ammonia, accurately add 50 mL of a mixture isopropanol and ethyl acetate (1:1) and weigh. Ultrasonicate for 30 minutes, cool, and weigh again, replenish the loss of the solvent with the above mixture, mix well and filter. Measure accurately 25 mL of the successive filtrate, recover the solvent to dryness in vacuum below 40℃, dissolve the residue in 3 mL of the above mixture, filter and use the successive filtrate.
   (4) Chromatographic system: The liquid chromatography is equipped with an ultraviolet absorption photometer (wavelength: 235 nm) and a column packed with octadecylsilanized silica gel. Program the chromatographic system as follows. The number of theoretical plates of the peak of mesaconitine should not be less than 2,000.

Time (min)	Mobile phase A (%)	Mobile phase B (%)
0~48	15→26	85→74
48~49	26→35	74→65
49~58	35	65
58~65	35→15	65→85

   (5) Procedure: Inject accurately 10 μL of each of the reference standard solution and the sample solution into the liquid chromatography apparatus, and calculate the content.
2. Water extractives: Carry out the method for determination of water extractives (General rule 5006).
3. Dilute ethanol extractives: Carry out the method for determination of dilute ethanol-soluble extractives (General rule 5006).

Storage: Store in a ventilated and dry place, and protect from insects.
Usage: Interior-warming medicinal.
Dosage: 1.5~3 g.
Precaution and warning: Unprocessed one highly toxic, store with caution, generally processed before application, decocted earlier and for a long time. Contraindicated in pregnancy for oral administration.

ACORI GRAMINEI RHIZOMA
石菖蒲
Shih Chang Pu / Shi Chang Pu
Acorus Rhizome

Acorus rhizome is the dried rhizome of *Acorus gramineus* Soland. (Fam. Araceae).
It contains not less than 12.0% of dilute ethanol-soluble extractives, not less than 11.0% of water extractives and not less than 1.0% (v/w) of volatile oil.

Description: Compressed-cylindrical, curved and branched, 3~20 cm in length, 0.5~1 cm in diameter. Externally brown or reddish-brown, annulations arranged closely, internodes with triangular leaf scar and fine longitudinal wrinkles, arranged alternately, with hairy and scaly remains, with rounded protuberant root scars below. Texture hard, easily broken, fracture fibrous, yellowish-white or grayish-white, an endodermis ring distinct. Odor, aromatic; taste, slightly pungent.

Microscopic identification:
1. **Transverse section:** Epidermis composed of brown cells with thickened outer wall, subsquare,

occasionally containing reddish-brown contents. Cortex broad, composed of many layers of parenchymatous cells, cells filled with starch granules; cortex scattered with numerous fiber bundles and leaf-trace vascular bundles; fiber bundles vary in size, 6~21 μm in diameter, surrounded by parenchymatous cells, containing crystals of calcium oxalate, forming crystal fibers in longitudinal view. Leaf-trace vascular bundles collateral; phloem cells small; xylem vessels in groups, 9~32 μm in diameter, mainly spiral and annular. Vascular bundles sheath composed of lignified fibers. Endodermis distinct. Stele occupy 1/3 portion of rhizome, scattered with numerous vascular bundles, densely arranged close to the endodermis, vascular bundles amphivasal, phloem cells small, vessels 9~32 μm in diameter, mainly spiral and reticulate. Fibers of vascular bundles sheath relatively less, surrounded by parenchymatous cells containing prisms of calcium oxalate, forming crystal fibers.

2. **Powder:** Pale yellowish-brown. Fibers in bundles, extremely lignified, 6~21 μm in diameter, up to 350~780 μm in length, the outer layer surrounded by parenchymatous cells, containing prisms, forming crystal fibers. Vessels spiral and reticulate, 9~32 μm in diameter. Starch granules vary in size, simple granules 3~9 μm in diameter, hilum dotted and V-shaped, with indistinct striations; compound granules also exist.

Thin layer chromatographic identification test (General rule 1010.3):

1. Sample solution: Add 1.0 g of powdered sample to 10 mL of methanol in an erlenmeyer flask, ultrasonicate for 30 minutes, filter and use the filtrate.
2. Reference drug solution: Use 1.0 g of the reference drug as the same method described above.
3. Procedure: Use silica gel F_{254} as the coating substance and a solution of *n*-hexane and ethyl acetate (4:1) as the developing solvent. Apply each 5 μL of each of the above solutions to the plate. Once the top of the solvent rise to about 5~10 cm from the origin, dry in air. Spray with a solution of *p*-anisaldehyde in sulfuric acid (*p*-Anisaldehyde/H_2SO_4 TS), heat at 105℃ until the spots become visible. The spots in the chromatogram obtained from the sample solution correspond in R_f values and color to the spots in the chromatogram obtained from the reference drug solution.

Impurities and other requirements:

1. Loss on drying: Not more than 15.0% under heating at 105℃ for 5 hours (General rule 5008).
2. Total ash: Not more than 10.0% (General rule 5004).
3. Acid-insoluble ash: Not more than 3.0% (General rule 5004).

Assay:

1. Water extractives: Carry out the method for determination of water extractives (General rule 5006).
2. Dilute ethanol extractives: Carry out the method for determination of dilute ethanol-soluble extractives (General rule 5006).
3. Volatile oil: Carry out the method for determination of volatile oil (General rule 5007).

Storage: Store in a dry place, and protect from mold.
Usage: Orifice-opening medicinal.
Dosage: 3~10 g.

ADENOPHORAE RADIX
南沙參
Nan Sha Shen / Nan Sha Shen
Ladybell Root

Ladybell root is the dried root of *Adenophora stricta* Miq., *Adenophora axilliflora* Borb. or *Adenophora tetraphylla* (Thunb.) Fisch. (Fam. Campanulaceae).
It contains not less than 10.0% of dilute ethanol-soluble extractives and not less than 10.0% of water extractives.

Description:

1. Root of *Adenophora stricta*: Long conical or cylindrical, slightly curved, less with 2~3 branched, 8~27 cm in length, 1~4.3 cm in diameter. Externally yellowish-white (peeled) or grayish-brown, with wax-like lustrous and irregularly twisted and longitudinal wrinkles, upper part with dense fine transverse striations. Cork fine squamous, squamous at the upper, smooth at the base. Rhizome single to 6, 2~7 cm in length, surrounded by numerous semilunar scars of stems, gathered. Texture light and loose, fracture whitish, uneven, with numerous irregular clefts. Odor, slight; taste, sweetish and bitter.
2. Root of *Adenophora tetraphylla*: 5.5~14 cm in length, 0.5~2.1 cm in diameter. Externally without longitudinal wrinkles, upper part with transverse annul striations. Cork wide strip.

Microscopic identification:

1. **Transverse section:**
   (1) Root of *Adenophora stricta*: Phelloderm 68~358 μm thick. Cork composed of thickened cork cells arranging into 1~3 rings, each ring 1 layer of cells thick, cells rectangular, outer walls 4~23 μm thick, the lateral wall usually thickened and forming inverted U-shaped, some outer walls ridge-like thickened and intruding into lumina; cork cells 2~4 rings, each ring composed of 2~7 layers, wall thin. Cortex narrow, with horizontal laticiferous tubes. Stele forming tertiary structure, slightly eccentric; tertiary vascular tissue arranged

alternately with secondary vascular tissue near center; cambium and tertiary cambium short-arciform, arranged in an interrupted ring, tertiary vascular tissue bundle-shaped or xylem bundles mostly branched outwards; rays distinct, usually pressed and broken. Laticiferous tubes mostly accompanied by sieve tube groups; cells containing inulin are extremely rare.

2. **Powder:**
   (1) Root of *Adenophora stricta*: Grayish-yellow. Reticulate, scalariform, reticular bordered-pitted and scalariform-reticulate vessels 18~90 μm in diameter; reticulate vessels with dents mostly slit-shaped, some dents dense and large. Thickened cork cells subrectangular, long strip-shaped, suboblong or subpolygonal in surface view, 18~170 μm in length, 18~150 μm in diameter, wall 2~7 μm thick, some with anticlinal walls moniliform thickened, some with warty protrusions and intruding into lumina; rectangular in sectional view, outer wall 5~7 μm thick, lateral wall slightly thickened. Cork cells subrectangular, long strip-shaped or irregular in shape in surface view, anticlinal walls straight or curved; subrectangular in sectional view, strip-shaped striations rare. Articulated laticiferous tubes usually reticulately linked, 12~56 μm in diameter. Inulin crystals fan-shaped, subrounded or irregular in shape.
   (2) Root of *Adenophora tetraphylla*: Grayish-yellow. Reticulate, pitted and scalariform vessels 12~88 μm in diameter. Thickened cork cells subrectangular in surface view, 93~240 μm in length, 21~59 μm in diameter, wall 1~27 μm thick, with dense clefts and pits; rectangular in sectional view, outer walls thickened, lateral walls slightly U-shaped thickened.

Thin layer chromatographic identification test (General rule 1010.3):

1. Sample solution: Add 2.0 g of powdered sample to 30 mL of methanol, heat under reflux for 1 hour then filter, evaporate to dryness, dissolve the residue in 1 mL of methanol.
2. Reference drug solution: Use 2.0 g of the reference drug as the same method described above.
3. Procedure: Use silica gel F_{254} as the coating substance and a solution of chloroform, methanol and formic acid (9:1:2) as the developing solvent. Apply 2~5 μL of the sample solution and 3 μL of reference drug solution to the plate. Once the top of the solvent rise to about 5~10 cm from the origin, dry in air. Spray with a solution of phosphomolybdic acid in ethanol (Phosphomolybdic Acid/EtOH TS) and heat at 105 ℃ until the spots become visible. The spots in the chromatogram obtained from the sample solution correspond in R_f values and color to the spots in the chromatogram obtained from the reference drug solution.

Impurities and other requirements:

1. Loss on drying: Not more than 15.0% under heating at 105℃ for 5 hours (General rule 5008).
2. Total ash: Not more than 5.0% (General rule 5004).
3. Acid-insoluble ash: Not more than 1.0% (General rule 5004).

Assay:

1. Water extractives: Carry out the method for determination of water extractives (General rule 5006).
2. Dilute ethanol extractives: Carry out the method for determination of dilute ethanol-soluble extractives (General rule 5006).

Storage: Refrigerate or store in a cool and dry place, and protect from mold and insects.
Usage: Tonifying and replenishing medicinal (Yin-tonifying medicinal).
Dosage: 9~15 g.

AGASTACHIS HERBA
藿香
Huo Siang / Huo Xiang
Agastache Herb

Agastache herb is the dried aerial part of *Agastache rugosa* (Fisch. et Mey.) O. Kuntze (Fam. Labiatae).
It contains not less than 5.0% of dilute ethanol-soluble extractives, not less than 5.0% of water extractives and not less than 0.5% (v/w) of volatile oil.

Description: Stem quadrangular, up to 5 mm in diameter, externally dark brown, with ridges on the four angles, four surfaces relatively even or depress into broad furrows, with longitudinal wrinkles, nodes distinct, internode 3~10 cm in length. The better character as dried, fresh, stem light green, leaf thick, with strongly aromatic.

Microscopic identification:

1. **Transverse section:**
   (1) Stem: Epidermis composed of 1 layer of rectangular cells, 6 x 10 μm; inside showing cortex, composed of 3~5 layers of irregular polygonal parenchymatous cells, 15~20 μm in diameter. Phloem surrounded inside cortex, sieve tubes composed of 2~3 layers of cells, 7~8 μm in diameter. Xylem composed of 10~15 layers of vessel cells, arranging neatly, 12~16 μm in diameter. Pith in the center, parenchyma tissue of pith gradually large inward, 30~120 μm in diameter, about 10

layers from xylem to the center.

2. **Powder:** Brownish-yellow. Non-glandular hairs 1- to 5-celled, slightly curved and leaned to one side, 17~303 μm in length, 12~28 μm in diameter, wall slightly thickened, with warty protuberance on the surface. Glandular scales 4- or 8-celled, 63~91 μm in diameter, containing pale yellow contents; the stalk unicellular, extremely short. Small glandular hairs with head 1- to 2-celled, 13~27 μm in diameter; the stalk unicellular. Raphides of calcium oxalate extremely fine, scattered in mesophyll and epidermal cells of stem, about to 8 μm in length. Stone cells singly scattered, pericyclic fibers, xylem fibers and vessels also visible.

Impurities and other requirements:

1. Total ash: Not more than 12.0% (General rule 5004).
2. Acid-insoluble ash: Not more than 5.0% (General rule 5004).

Assay:

1. Water extractives: Carry out the method for determination of water extractives (General rule 5006).
2. Dilute ethanol extractives: Carry out the method for determination of dilute ethanol-soluble extractives (General rule 5006).
3. Volatile oil: Carry out the method for determination of volatile oil (General rule 5007).

Storage: Store in a ventilated and dry place.
Usage: Dampness-resolving with aroma medicinal.
Dosage: 4.5~9 g.

AGRIMONIAE HERBA
仙鶴草
Sian He Cao / Xiao He Cao
Hairyvein Agrimonia Herb

Hairyvein agrimonia herb is the dried herb of *Agrimonia pilosa* Ledeb. (Fam. Rosaceae).
It contains not less than 8.0% of dilute ethanol-soluble extractives and not less than 7.0% of water extractives.

Description: 50~100 cm in length, with white hairs. The lower part of stem cylindrical, 4~6 mm in diameter, reddish-brown; the upper part of stem in square or flat-cylindrical, the four sides slightly depressed, greenish-brown, furrowed longitudinally and ridged, and distinctly nodose; texture light and hard, easily broken; fracture yellowish-white or hollow. Leaves odd-pinnate, alternate, dark green, crumpled and rolled; texture fragile and easily broken; two sizes of small leaflets, the small leaflets interposed between the large ones at the leaf axis, the ones at the apex relatively large, oblong to lanceolate as whole, base cuneate, margin serrate, the ones at the base with more hairs, stipules 2, amplexicaul, oblique-ovate. Raceme slender; the lower part of calyx tubular, with hairs and grooves, with hooked bristles at the upper part of calyx tube; petals yellow. Odor, slight; taste, slightly bitter.

Microscopic identification:

1. **Transverse section:**
   (1) Stem: Non-glandular hairs adhered to the epidermis, mostly unicellular, vary in length, usually 300~400 μm, thick-walled. Epidermal cells composed of 1 layer of subrectangular or suboblong cells, the outer wall slightly thickened; inner part composed of layers of large parenchymatous cells. Inner side of cortex composed of pericycle fiber layers, lignified, arranged as a ring. Fibers 5~18 μm in diameter. Collateral vascular bundles arranged as a ring. Rays distinct. Vessels mainly spiral and scalariform, 6~25 μm in diameter. Pith broad, composed of subrounded parenchymatous cells.
2. **Powder:** Dark green. Non-glandular hairs mostly unicellular, thick-walled, vary in length, 80~450 μm in length, commonly with 300~400 μm in length. Glandular hairs few, glandular head small and ovoid, composed of 1~4 cells; stalk 1~4 cells. Starch granules relatively numerous, simple granules oblong, 2~5 μm in diameter, compound granules composed of 2~4 components. Clusters of calcium oxalate 10~45 μm in diameter. Fibers 5~18 μm in diameter. Vessels mainly spiral or scalariform, 6~25 μm in diameter.

Thin layer chromatographic identification test (General rule 1010.3):

1. Sample solution: Add 2.0 g of powdered sample to 40 mL of petroleum ether (30~60℃), ultrasonicate for 30 minutes, filter and evaporate the filtrate to dryness, dissolve the residue in 10 mL of chloroform, extract by shaking with 10 mL of 5% solution of sodium hydroxide, discard the chloroform solution, adjust the pH value of sodium hydroxide solution to 1~2 with dilute hydrochloride acid and extract shaking twice with 10 mL of chloroform, combine the chloroform extracts, wash with 10 mL of water, discard the water solution, and evaporate the chloroform solution to 1 mL.
2. Reference drug solution: Use 2.0 g of the reference drug as the same method described above.
3. Reference standard solution: Weigh accurately a quantity of agrimophol B and dissolve in chloroform to produce a solution containing 0.5 mg per mL.
4. Procedure: Use silica gel F_{254} as the coating substance and the supernatant of petroleum ether (30~60℃), ethyl acetate and acetic acid (100:9:5) as the developing solvent. Apply 10 μL of each of the above solutions to the plate. Once the top of the solvent rise to about 5~10 cm from the origin, dry

in air. Spray with a 10% solution of sulfuric acid in ethanol (H_2SO_4/EtOH TS) and heat at 105℃ until the spots become visible. The spots in the chromatogram obtained from the sample solution correspond in R_f values and color to the spots in the chromatogram obtained from the reference drug solution and the reference standard solution.

Impurities and other requirements:

1. Loss on drying: Not more than 13.0% under heating at 105℃ for 5 hours (General rule 5008).
2. Total ash: Not more than 10.0% (General rule 5004).
3. Acid-insoluble ash: Not more than 3.0% (General rule 5004).

Assay:

1. Water extractives: Carry out the method for determination of water extractives (General rule 5006).
2. Dilute ethanol extractives: Carry out the method for determination of dilute ethanol-soluble extractives (General rule 5006).

Storage: Store in a ventilated and dry place, and protect from moisture and mold.
Usage: Blood-regulating medicinal (Hemostatic medicinal).
Dosage: 6~12 g.

AILANTHI CORTEX
臭椿皮
Chou Chun Pi / Chou Chun Pi
Ailanthus Bark

Ailanthus bark is the dried bark of root or trunk of *Ailanthus altissima* (Mill.) Swingle (Fam. Simarubaceae), commonly known as "Chun Pi".

Description:

1. Bark of root: Slat pieces or irregular quills, 2~10 mm thick. Outer surface grayish-yellow or yellowish-brown, with irregular longitudinal and transverse striations, rough, with numerous large and distinct fusiform protuberant lenticels, occasionally transverse lenticels connected. Yellowish-white when peeled, inner surface pale yellow, with densely fine fusiform dots spots or pores. Texture hard and fragile; fracture granular at the outer part, fibrous at the inner part, inner part easily exfoliated from outer part. Odor, slight; taste, bitter.
2. Bark of stem: Slat pieces, 0.5~2 cm thick. Outer surface grayish-black, very rough, with irregular longitudinal and transverse striations, lenticels large, occasionally transverse lenticels connected. Fracture granular. Odor, slight; taste, bitter.

Microscopic identification:

1. **Powder:** Pale grayish-yellow. Stone cells mostly in bundles or linked with fibers, subrounded, subsquare, subrectangular or irregular in shape, occasionally with margins acute and protrude, 24~96 μm in diameter and up to 150 μm in length, wall extremely thickened, occasionally walls vary in thickness or walls relatively thickened on three sides and thin on one side, lumen usually containing clusters of calcium oxalate, 11~48 μm in diameter. Fibers 20~40 μm in diameter, wall extremely thickened and lignified. Clusters of calcium oxalate 15~56 μm in diameter. Prisms of calcium oxalate, starch granules and cork cells also present.

Identification:

1. Take 10.0 g of powdered sample, add 50 mL of methanol, heat under reflux for 30 minutes, filter. Evaporate the filtrate to dryness, dissolve the residue in 1 mL of glacial acetic acid, add 1 mL of a solution of acetic anhydride and sulfuric acid (19:1), the yellowish-green color turns to dark green immediately.

Impurities and other requirements:

1. Loss on drying: Not more than 12.0% under heating at 105℃ for 5 hours (General rule 5008).
2. Total ash: Not more than 11.0% (General rule 5004).
3. Acid-insoluble ash: Not more than 3.0% (General rule 5004).

Storage: Store in a ventilated and dry place, and protect from insects.
Usage: Astringent medicinal.
Dosage: 6~9 g.

AKEBIAE CAULIS
木通
Mu Tong / Mu Tong
Akebia Lianoid Stem

Akebia lianoid stem is the dried lianoid stem of *Akebia quinata* (Thunb.) Decne., *Akebia trifoliata* (Thunb.) Koidz. or *Akebia trifoliata* (Thunb.) Koidz. var. *australis* (Diels) Rehd. (Fam. Lardizabalaceae).
It should not contain aristolochic acid I & aristolochic acid II.

Description:

1. Lianoid stem of *Akebia quinata*: Cylindrical and twisted, 30~60 cm in length, 1.2~1.8 cm in diameter. Externally grayish-brown, rough, with irregular cracks, nodes indistinct, with scars of later branches. Texture compact, fracture uneven, bark yellowish-brown, wood yellowish-white, rays arranged radially, pith small. Odor, slight; taste, slightly bitter and astringent.

Microscopic identification:

1. **Transverse section:**
   (1) Lianoid stem of *Akebia quinata*: Cork composed of several layers of cork cells. Cortex composed of several layers of tangentially elongated cells. Pericycle fibers are crystal fibers, crescent-shaped, almost scattered in an undulating ring; fiber walls thick and lignified. Collateral vascular bundles 12~28 in a ring; rays narrow, containing crystal-containing sclerenchyma cells, the wall lignified, mostly scattered among phloem rays. Pith cells gradually large from outer to inner, wall thickened and mostly lignified.
2. **Powder:** Dark yellow. Orange-yellow cork cells, fiber pieces, vessels and tracheid bordered pits are visible. Stone cells irregular in shape, 34~50 μm long, wall pits distinct. Crystals of calcium oxalate 40 μm in diameter.

Thin layer chromatographic identification test (General rule 1010.3):

1. Sample solution: Add 1.0 g of powdered sample to 50 mL of 70% methanol, ultrasonicate for 30 minutes, filter, evaporate the filtrate to dryness, dissolve the residue in 10 mL of water, extract shaking for three times, each time with 10 mL of ethyl acetate, combine the ethyl acetate extracts and evaporate to dryness, dissolve the residue in 1 mL of methanol.
2. Reference drug solution: Use 1.0 g of the reference drug as the same method described above.
3. Reference standard solution: Weigh accurately a quantity of calceolarioside B and dissolve in methanol to produce a solution containing 1.0 mg per mL.
4. Procedure: Use silica gel F_{254} as the coating substance and a solution of chloroform, methanol and water (30:10:1) as the developing solvent. Apply 5 μL of each of the above solutions to the plate. Once the top of the solvent rise to about 5~10 cm from the origin, dry in air. Spray with a 2% solution of vanillin in sulfuric acid (Vanillin/H_2SO_4 TS) and heat at 105℃ until the spots become visible. The spots in the chromatogram obtained from the sample solution correspond in R_f values and color to the spots in the chromatogram obtained from the reference drug solution and the reference standard solution.

Impurities and other requirements:

1. Loss on drying: Not more than 14.0% under heating at 105℃ for 5 hours (General rule 5008).
2. Total ash: Not more than 8.0% (General rule 5004).
3. Acid-insoluble ash: Not more than 1.0% (General rule 5004).
4. Should not contain aristolochic acid I & aristolochic acid II:
   (1) Sample solution: Add 3.0 g of powdered sample to 10 mL of ethanol, ultrasonicate for 30 minutes, filter.
   (2) Reference standard solution: Weigh accurately 2.0 mg of aristolochic acid and dissolve in 10 mL of ethanol to produce a solution containing 0.2 mg per mL.
   (3) Procedure: Carry out the method for thin layer chromatography (General rule 1010.3), use silica gel F_{254} as the coating substance and a solution of chloroform, ethanol and ethyl acetate (17:3:1) as the developing solvent. Apply 10 μL of each of the above solutions to the plate. Once the top of the solvent rise to about 5~10 cm from the origin, dry in air, and examine under ultraviolet light at 254 nm. Spray with a solution of vanillin in sulfuric acid (Vanillin/H_2SO_4 TS), dry in air, and examine under ultraviolet light at 365 nm. The spots in the chromatogram obtained from the sample solution should not correspond in R_f values and color to the spots in the chromatogram obtained from the reference standard solution.

Storage: Store in a cool and dry place.
Usage: Dampness-draining diuretic medicinal.
Dosage: 3~6 g.

ALBIZIAE CORTEX
合歡皮
He Huan Pi / He Huan Pi
Silktree Albizzia Bark

Silktree albizzia bark is the dried bark of trunk of *Albizzia julibrissin* Durazz. (Fam. Leguminosae).
It contains not less than 4.0% of dilute ethanol-soluble extractives and not less than 5.0% of water extractives.

Description: Quilled or channeled, 2~3.5 cm in diameter, 1~2 mm thick. Outer surface grayish-brown, slight rough, with dense transversal or elliptical lenticels, brown or reddish-brown, scattered or gathered. Inner surface pale yellowish-white, with fine longitudinal striations. Texture hard and fragile, fracture laminated, fiber layer stripped into pieces. Odor, slightly aromatic; taste, weak, slightly astringent and slightly irritating, with a disagreeable sensation in the throat afterwards.

Microscopic identification:

1. **Transverse section:** Cork composed of several layers of cork cells, containing brown contents. Cortex composed of tangentially elongated cells, some cells containing prisms of calcium oxalate, mostly located near cork. Pericycle mainly stone cell groups and few fiber bundles, arranged in a ring. Phloem contains numerous fiber bundles, arranged elongated in layers, occasionally containing some stone cell groups, fiber bundles

surrounded by cells, containing prisms of calcium oxalate, forming crystal fibers; stone cell groups also surrounded by crystal-containing cells; rays 2 layers of cells wide.

2. **Powder:** Pale yellow. Fibers slender, 7~22 μm in diameter, walls extremely thickened and lignified, some primary walls separated from epigenetic and secondary walls. Fiber bundles surrounded by sclerenchyma cells which containing prisms of calcium oxalate, forming crystal fibers. Stone cells subsquare, subrectangular or subpolygonal, 11~56 μm in diameter, walls extremely thickened, striations and pit canals distinct, some branched, relatively thin walls and extremely large lumen less. Stone cells surrounded by sclerenchyma cells which usually contain prisms. Crystal-containing sclerenchyma cells relatively small, subsquare or suboblong, 16~24 μm in diameter, walls thickened unevenly, slightly lignified or some part lignified, lumen contains prisms. Prisms of calcium oxalate polygonal, a few cube-shaped or flat-square, up to 16 μm in diameter. Parenchymatous cells of phloem occasionally round-bordered pits visible in radial view or cell walls moniliform thickened in tangential view. Cork cells, sieve tube elements and starch granules also present.

Thin layer chromatographic identification test (General rule 1010.3):

1. Sample solution: Add 1.0 g of powdered sample to 10 mL of 50% of methanol, macerate for 1 hour, ultrasonicate for 30 minutes, filter and evaporate the filtrate to dryness, dissolve the residue in 5 mL of water, extract shaking twice each with 5 mL of *n*-butanol, combine the *n*-butanol extracts, evaporate to dryness, dissolve the residue in 0.5 mL of methanol.
2. Reference drug solution: Use 1.0 g of the reference drug as the same method described above.
3. Procedure: Use silica gel F_{254} as the coating substance and the lower layer of a solution of chloroform, methanol and water (13:5:2) added 0.1 mL formic acid per 10 mL as the developing solvent. Apply 3 μL of each of the above solutions to the plate. Once the top of the solvent rise to about 5~10 cm from the origin, dry in air. Spray with a 5% solution of phosphomolybdic acid in ethanol (Phosphomolybdic Acid/EtOH TS), heat at 90℃ until the spots become visible. The spots in the chromatogram obtained from the sample solution correspond in R_f values and color to the spots in the chromatogram obtained from the reference drug solution.

Impurities and other requirements:

1. Loss on drying: Not more than 12.0% under heating at 105℃ for 5 hours (General rule 5008).
2. Total ash: Not more than 7.0% (General rule 5004).
3. Acid-insoluble ash: Not more than 1.0% (General rule 5004).

Assay:

1. Water extractives: Carry out the method for determination of water extractives (General rule 5006).
2. Dilute ethanol extractives: Carry out the method for determination of dilute ethanol-soluble extractives (General rule 5006).

Storage: Store in a ventilated and dry place.
Usage: Tranquillizing medicinal (Heart-nourishing tranquillizing medicinal).
Dosage: 6~12 g.

ALISMATIS RHIZOMA
澤瀉
Ze Sie / Ze Xie
Alisma Tuber

Alisma tuber is the dried tuber of *Alisma orientale* (Sam.) Juz. (Fam. Alismataceae).
It contains not less than 8.0% of dilute ethanol-soluble extractives, not less than 10.0% of water extractives and not less than 0.03% of alisol B monoacetate.

Description: Subspheroidal, oblong or obovate, 4~7 cm in length, 3~5 cm in diameter. Externally yellowish-white or pale brown with remained coarse bark, with irregular transverse-annular shallow furrows and scattered with numerous small protuberant fibrous root scars, relatively dense in the bottom. Texture compact, fracture yellowish-white, granular, with numerous small pores. Odor, slight; taste, slightly bitter.

Microscopic identification:

1. **Transverse section:** The outer tissue mostly removed, cortex aerenchyma remained, composed of parenchymatous cells, with extremely large intercellular spaces, inside showing 1 layer of endodermal cells, wall thickened and lignified with pits. Stele aerenchyma scattered with amphivasal vascular bundles and pale yellow secretory cavities. Parenchymatous cells filled with starch granules.
2. **Powder:** Pale yellow or slightly brown. Starch granules abundant, simple granules long-ovoid, subspheroidal or ellipsoid, 3~14 μm in diameter, hilum V-shaped, slit-shaped, cross-shaped or Y-shaped, located at the center or at the larger end of the granule; compound granules composed of 2~3 components. Parenchymatous cells polygonal, lateral walls moniliform thickened, with distinct pits; some contain elliptical pits crowded into pitted areas. Endodermal cells large, anticlinal walls sinuous, walls thickened and lignified, with distinct pit canals. Vessels mainly spiral, scalariform, reticulate, single-pitted and bordered-pitted, 10~24 μm in diameter. Fibers rare,

16~24 μm in diameter, walls relatively thickened and lignified. Secretory cavities and its fragments are also visible.

Thin layer chromatographic identification test (General rule 1010.3):

1. Sample solution: Add 2.0 g of powdered sample to 20 mL of ethyl acetate, ultrasonicate for 30 minutes. Apply the filtrate to an alumina column (200～300 mesh, 5 g, 1 cm in inner diameter, packed by dry method) elute with 10 mL of ethyl acetate, collect the eluates, evaporate to dryness, dissolve the residue in 1 mL of ethyl acetate.
2. Reference drug solution: Use 2.0 g of the reference drug as the same method described above.
3. Procedure: Use silica gel F_{254} as the coating substance and a solution of *n*-hexane and ethyl acetate (1:1) as the developing solvent. Apply 5 μL of each of the above solutions to the plate. Once the top of the solvent rise to about 5~10 cm from the origin, dry in air. Spray with a solution of *p*-anisaldehyde in sulfuric acid (*p*-Anisaldehyde/ H_2SO_4 TS) and heat at 105℃ until the spots become visible. The spots in the chromatogram obtained from the sample solution correspond in R_f values and color to the spots in the chromatogram obtained from the reference drug solution.

Impurities and other requirements:

1. Total ash: Not more than 6.0% (General rule 5004).
2. Acid-insoluble ash: Not more than 1.0% (General rule 5004).
3. Total heavy metals: Not more than 20.0 ppm (General rule 3005).
4. Arsenic (As): Not more than 5.0 ppm (General rule 3006, 3049, 3050).

Assay:

1. Alisol B monoacetate:
   (1) Mobile phase: A solution of water and acetonitrile (40:60). The ratio varies as required.
   (2) Reference standard solution: Place in silica gel for 24 hour, weigh accurately 2.0 mg of alisol B monoacetate and dissolve in methanol to produce a solution containing 0.04 mg per mL.
   (3) Sample solution: Add 0.5 g of powdered sample to 20 mL of methanol, ultrasonicate for 20 minutes, filter, and make up the filtrate to 20 mL.
   (4) Chromatographic system: The liquid chromatography is equipped with an ultraviolet absorption photometer (wavelength: 208 nm) and a column (3.9 mm × 5 cm) packed with octadecylsilanized silica gel (5 μm in particle diameter). The column temperature is maintained at 35℃. The flow rate is about 0.8 mL/min. Inject reference standard solution into the liquid chromatography apparatus for five times, and record the peak areas. The relative standard deviation of the peak area of alisol B monoacetate should not be more than 1.5%.
   (5) Procedure: Inject accurately 5 μL of each of the reference standard solution and the sample solution into the liquid chromatography apparatus, and calculate the content.
2. Water extractives: Carry out the method for determination of water extractives (General rule 5006).
3. Dilute ethanol extractives: Carry out the method for determination of dilute ethanol-soluble extractives (General rule 5006).

Storage: Refrigerate or store in a cool and dry place, and protect from insects.
Usage: Dampness-draining diuretic medicinal.
Dosage: 6~10 g.

ALLII MACROSTEMONIS BULBUS
薤白
Sie Bai / Xie Bai
Longstamen Onion Bulb

Longstamen onion bulb is the dried bulb of *Allium macrostemon* Bge. or *Allium chinensis* G. Don (Fam. Liliaceae).
It contains not less than 64.0% of dilute ethanol-soluble extractives and not less than 64.0% of water extractives.

Description:

1. Bulb of *Allium macrostemon*: Irregularly oval, 0.5~2.0 cm in height, 0.7~1.8 cm in diameter. Externally yellowish-white or pale yellowish-brown, crumpled, translucent, covered with whitish membranous scales, apex with remained stem bases or stem scars, base with bulged plateau. Texture hard, horny, uneasily broken, fracture yellowish-white. Odor, alliaceous; taste, slightly pungent.
2. Bulb of *Allium chinensis*: Long-oval, 1~3 cm in height, 0.3~1.5 cm in diameter. Externally pale yellowish-brown or brown, with shallowly longitudinal wrinkles. Texture soft, cut fracture showing 2~3 layers of scale leaves, sticky on chewing.

Microscopic identification:

1. **Powder:**
   (1) Bulb of *Allium macrostemon*: Yellowish-brown. Epidermal cells of scale leaf subrectangular, 60~260 μm in length, 20~60 μm in width, a few polygonal, without intercellular spaces. Stomata occasionally scattered, rounded, 10~16 μm in diameter, with 5~6 subsidiary cells. Epidermal cells of

old scale leaf contain prisms of calcium oxalate, 5~10 μm in length, each cell contains 2~4 prism crystals. Vessels mostly spiral, 6~16 μm in diameter.

Thin layer chromatographic identification test (General rule 1010.3):

1. Sample solution: Add 1.0 g of powdered sample to 10 mL of methanol, ultrasonicate for 30 minutes, cool, filter, and make up the filtrate to 10 mL.
2. Reference drug solution: Use 1.0 g of the reference drug as the same method described above.
3. Procedure: Use silica gel F_{254} as the coating substance and a solution of *n*-hexane and ethyl acetate (10:1) as the developing solvent. Apply 10 μL of each of the above solutions to the plate. Once the top of the solvent rise to about 5~10 cm from the origin, dry in air. Expose to iodine vapor until the spots become visible. Examine under the visible light. The spots in the chromatogram obtained from the sample solution correspond in R_f values and color to the spots in the chromatogram obtained from the reference drug solution.

Impurities and other requirements:

1. Loss on drying: Not more than 17.0% under heating at 105℃ for 5 hours (General rule 5008).
2. Total ash: Not more than 3.0% (General rule 5004).
3. Acid-insoluble ash: Not more than 1.0% (General rule 5004).

Assay:

1. Water extractives: Carry out the method for determination of water extractives (General rule 5006).
2. Dilute ethanol extractives: Carry out the method for determination of dilute ethanol-soluble extractives (General rule 5006).

Storage: Store in a ventilated and dry place, and protect from insects.
Usage: Qi-regulating medicinal.
Dosage: 5~9 g.

ALLII TUBEROSI SEMEN
韭菜子
Jiou Cai Zih / Jiu Cai Zi
Tuber Onion Seed

Tuber onion seed is the dried ripe seed of *Allium tuberosum* Rottl. ex Spreng. (Fam. Liliaceae).
It contains not less than 7.0% of dilute ethanol-soluble extractives and not less than 10.0% of water extractives.

Description: Flattened ovate, 0.2~0.4 cm in length, 0.15~0.3 cm in width. Externally black, with distinct reticulate striations at the protuberant side, the dented side with indistinct wrinkles, apex obtuse, base slightly acute, hilum dotted and protuberant. Testa thin at the longitudinal section, endosperm grayish-white, embryo white and curved, cotyledon 1. Fracture grayish-yellow, oily. Texture hard. Odor, characteristic; taste, leek flavor on chewing.

Microscopic identification:

1. **Transverse section:** Epidermis of testa relatively smooth, wall thick, outer walls covered with thin cuticle, cells containing dark brown contents, inside showing several rows of brownish-yellow parenchymatous cells. Endosperm cells large, wall extremely thickened with large pits, lumen containing aleurone grains and fatty oil.
2. **Powder:** Grayish-black. Epidermal cells of testa black or brownish-black, long strip-shaped, subrounded, polygonal or irregular in shape, 37~200 μm in diameter, with reticular striations on the surface. Endosperm cells abundant, mostly broken, with large subrounded or elongated-rounded pits.

Impurities and other requirements:

1. Loss on drying: Not more than 11.0% under heating at 105℃ for 5 hours (General rule 5008).
2. Total ash: Not more than 7.0% (General rule 5004).
3. Acid-insoluble ash: Not more than 1.0% (General rule 5004).

Assay:

1. Water extractives: Carry out the method for determination of water extractives (General rule 5006).
2. Dilute ethanol extractives: Carry out the method for determination of dilute ethanol-soluble extractives (General rule 5006).

Storage: Store in a ventilated and dry place.
Usage: Deficiency-tonifying medicinal.
Dosage: 3~9 g.

ALPINIAE KATSUMADAI SEMEN
草豆蔻
Cao Dou Kou / Cao Dou Kou
Katsumada Galangal Seed

Katsumada galangal seed is the dried and almost ripe seed of *Alpinia katsumadai* Hayata (Fam. Zingiberaceae). It contains not less than 5.0% of dilute ethanol-soluble extractives and not less than 2.0% of water extractives.

Description: Masses of seeds subspheroidal and flattened or elliptical-spheroidal, with relatively distinct 3 obtuse ridged and 3 shallow furrows, 1.5~2.5 cm in length, 1.5~3 cm in diameter. Externally grayish-brown or yellowish-brown, with yellowish-white or pale brown septa in central part dividing the masses into 3 groups, each containing 25~110 seeds, agglutinated closely. Seed

ax-shaped oval or cylindrical polyhedral, thicker at one end, the other end relatively flat, dorsal slightly protuberant, 3~5 mm in length, 2.5~3 mm in diameter, covered with grayish-white membranous aril. The thicker end with a round hilum, chalaza occurring at the dented center of relatively flat end, raphe of the lateral side occurring as a longitudinal furrow connected with two ends, the other furrow of the dorsal side occurring at the chalaza disconnected with hilum. Texture hard, fracture milky-white. Odor, aromatic; taste, pungent.

Microscopic identification:

1. **Transverse section:** Aril occasionally found, cells elongated tangentially, subrectangular, suboblong or irregularly long strip-shaped. Epidermis of testa composed of 1 layer of cells, mostly elongated radially, cells subrectangular, subsquare or oblong, arranged in order, 11~28 μm in length, 9~18 μm in diameter, wall slightly thickened. Hypodermis composed of 2 layers of tangentially elongated cells, without pigments. Pigment layer composed of 3~5 layers of cells, containing reddish-brown or pale yellow pigments. Oil cells arranged interruptedly in pigment layer, 1~2 layers, elongated tangentially, containing oil droplets. Endotesta composed of 1 layer of sclerenchymatous cells, reddish-brown, elongated tangentially, cylindrical, protuberant inward in raphe and crease, 24~39 μm in length, 11~29 μm in diameter, outer wall thin, inner wall about 18 μm thick, unlignified, lumen located at the upper part, subrounded or subovate, containing subrounded silica bodies, 10~18 μm in diameter. Perisperm cells oblong, subrectangular, subsquare or subrounded, 11~164 μm in length, 10~57 μm in diameter, the inner and outer side cells relatively small, the cells large in the center; cells filled with masses of tiny starch granules; some cells containing fine prisms of calcium oxalate. Endosperm cells subsquare, filled with aleurone grains. Embryo cells subrounded, containing aleurone grains and oil droplets.
2. **Powder:** Grayish-brown. Epidermal cells of testa long strip-shaped in surface view, the terminal gradually acute, 9~31 μm in diameter, wall 2~5 μm thick, unlignified. Hypodermal cells 1~3 layers overlapped, usually vertically arranged with epidermal cells of testa in an upper and lower layered pattern; long-polygonal or subrectangular, 14~31 μm in diameter, up to 150 μm in length, wall thin, lumen without dark pigments. Pigment cells reddish-brown, shrunken, with indistinct boundaries, containing reddish-brown pigments. Oil cells colorless or pale yellow, scattered among pigment cells; subrounded, oblong or rounded-polygonal, 18~54 μm in diameter, containing yellowish-green oil contents. Sclerenchymatous cells of endotesta yellowish-brown or reddish-brown, polygonal in surface view, 14~25 μm in diameter, wall thick and unlignified, lumen containing silica bodies, 8~15 μm in diameter; cells 1 layer in sectional view, arranged in palisade-shaped. Perisperm cells, prisms or clusters of calcium oxalate, endosperm cells, parenchymatous cells of embryo, pigment masses and aril cells present occasionally.

Thin layer chromatographic identification test (General rule 1010.3):

1. Sample solution: Add 1.0 g of powdered sample to 10 mL of methanol, ultrasonicate for 30 minutes, filter and make up the filtrate to 10 mL.
2. Reference drug solution: Use 1.0 g of the reference drug as the same method described above.
3. Procedure: Use silica gel F_{254} as the coating substance and a solution of *n*-hexane and acetone (2:1) as the developing solvent. Apply 5 μL of each of the above solutions to the plate. Once the top of the solvent rise to about 5~10 cm from the origin, dry in air. Examine under the ultraviolet light at 365 nm. The spots in the chromatogram obtained from the sample solution correspond in R_f values and color to the spots in the chromatogram obtained from the reference drug solution.

Impurities and other requirements:

1. Loss on drying: Not more than 15.0% under heating at 105℃ for 5 hours (General rule 5008).
2. Total ash: Not more than 6.0% (General rule 5004).
3. Acid-insoluble ash: Not more than 3.0% (General rule 5004).

Assay:

1. Water extractives: Carry out the method for determination of water extractives (General rule 5006).
2. Dilute ethanol extractives: Carry out the method for determination of dilute ethanol-soluble extractives (General rule 5006).

Storage: Refrigerate or store in a cool and dry place, and protect from moisture and color changing.
Usage: Dampness-resolving with aroma medicinal.
Dosage: 3~7 g.

ALPINIAE OFFICINARI RHIZOMA
高良薑
Gao Liang Jiang / Gao Liang Jiang
Galangal Rhizome

Galangal rhizome is the dried rhizome of *Alpinia officinarum* Hance (Fam. Zingiberaceae).
It contains not less than 7.0% of dilute ethanol-soluble extractives, not less than 6.0% of water extractives and not less than 0.70% of galangin.

Description: Cylindrical, often branched, 4~9 cm in length, 1~1.5 cm in diameter. Externally dark

reddish-brown, with grayish-brown undulate annular nodes, internode about 5 mm in length, with longitudinal wrinkles, lower part with round scars of root. Texture hard and tenacious, uneasily broken, fracture grayish-brown or reddish-brown, fibrous, endodermis distinct, scattered with dots of vascular bundles. Odor, aromatic; taste, pungent.

Microscopic identification:

1. **Transverse section:** Epidermis with thickened outer walls. Cortex scattered with abundant leaf-trace vascular bundles, collateral, relatively large than vascular bundles in stele. Endodermis distinct. Collateral vascular bundles in stele extremely numerous, the vascular bundles relatively small and dense near endodermis, arranged in a ring; vascular bundle sheath fibers arranged in a ring, wall thick, unlignified or slightly lignified. Secretory cells numerous, containing orange-red or brownish-red resinous contents; parenchymatous cells contain starch granules.
2. **Powder:** Purplish-brown. Simple starch granules rod-shaped, reniform, oblong, rhombic or long-ovate, 24~90 μm in length, 8~27 μm in diameter, hilum dotted, short cleft-shaped or Y-shaped, oblique at one end or located in the center, striations faintly visible; compound granules composed of 2~8 components. Secretory cells mostly broken, intact ones subrounded or oblong, 40~48 μm in diameter, wall slightly thickened with pits, lumen containing orange-red or brownish-red resinous contents. Parenchymatous cells with walls slightly thickened, subrounded pits distinct; fine prisms of calcium oxalate occasionally found. Endodermal cells (roots) usually singly scattered, slender, the terminal truncate or slightly acute, 120~200 μm in length, 22~27 μm in diameter, walls extremely thickened on three sides and thin on one side, four sides evenly thickened occasionally found, unlignified, with distinct pit canals. Fibers slender, 22~37 μm in diameter, wall slightly thickened and unlignified, some lumina contain reddish-brown contents. Scalariform, reticulate or spiral vessels present, 18~56 μm in diameter; epidermal cells of scale leaf long-polygonal, wall slightly thickened, some parts moniliform.

Thin layer chromatographic identification test (General rule 1010.3):

1. Sample solution: Take 5.0 g of powdered sample to a round-bottom flask, add 200 mL of water, connect with a volatile oil determination tube, add water from the top of determination tube until the graduated part filled and overflowing into the flask, add 3 mL of *n*-hexane and connect with reflux condenser, heat to slightly boil for 2 hours, cool and use the *n*-hexane solution.
2. Reference drug solution: Use 5.0 g of the reference drug as the same method described above.
3. Procedure: Use silica gel F_{254} as the coating substance and a solution of toluene and ethyl acetate (19:1) as the developing solvent. Apply 10 μL of each of the above solutions to the plate. Once the top of the solvent rise to about 5~10 cm from the origin, dry in air. Spray with a 5% solution of vanillin in sulfuric acid (Vanillin/H_2SO_4 TS) and heat at 105℃ until the spots become visible. The spots in the chromatogram obtained from the sample solution correspond in R_f values and color to the spots in the chromatogram obtained from the reference drug solution.

Impurities and other requirements:

1. Loss on drying: Not more than 15.0% under heating at 105℃ for 5 hours (General rule 5008).
2. Total ash: Not more than 4.0% (General rule 5004).
3. Acid-insoluble ash: Not more than 2.0% (General rule 5004).
4. Total heavy metals: Not more than 10.0 ppm (General rule 3005).
5. Arsenic (As): Not more than 5.0 ppm (General rule 3006, 3049, 3050).

Assay:

1. Galangin:
   (1) Mobile phase: A solution of methanol and 0.2% phosphoric acid (55:45). The ratio varies as required.
   (2) Reference standard solution: Weigh accurately a quantity of galangin and dissolve in methanol to produce a solution containing 40 μg per mL.
   (3) Sample solution: Weigh accurately 0.2 g of powdered sample, transfer to a conical flask with stopper, add accurately 50 mL of methanol then weigh, stopper tightly, heat and reflux for 1 hour, cool, weigh again, replenish the loss of the weight with methanol, mix well, filter and use the successive filtrate.
   (4) Chromatographic system: The liquid chromatography is equipped with an ultraviolet absorption photometer (wavelength: 266 nm) and a column packed with octadecylsilanized silica gel. The number of theoretical plates of the peak of galangin should not be less than 6,000
   (5) Procedure: Inject accurately 10 μL of each of the reference standard solution and the sample solution into the liquid chromatography apparatus, and calculate the content.
2. Water extractives: Carry out the method for determination of water extractives (General rule 5006).

3. Dilute ethanol extractives: Carry out the method for determination of dilute ethanol-soluble extractives (General rule 5006).

Storage: Store in a ventilated and dry place, and protect from insects.
Usage: Interior-warming medicinal.
Dosage: 3~6 g.

ALPINIAE OXYPHYLLAE FRUCTUS
益智
Yi Jhih / Yi Zhi
Sharpleaf Galangal Fruit

Sharpleaf galangal fruit is the dried ripe fruit of *Alpinia oxyphylla* Miq. (Fam. Zingiberaceae).
It contains not less than 8.0% of dilute ethanol-soluble extractives, not less than 10.0% of water extractives and not less than 1.0% (v/w) of volatile oil.

Description: Ellipsoidal, both ends slightly acute, 1~2 cm in length, 0.8~1.2 cm in diameter. Externally brown or dark brown, with 13~20 longitudinal, uneven and protuberant lines, apex with a protuberant scar of perianth, base with fruit stalk or its scar. Pericarp thin and slightly tenacious, adhering closely to seeds. Seeds gathered in masses and divided to three valves by brown septum with 6~11 seeds in each valve. Seed irregularly oblate, about 0.3 cm in diameter, brown, covered with yellow membranous aril, dorsal side slightly dented, and center of ventral side with dented hilum. Odor, characteristically aromatic; taste, pungent and slightly bitter.

Microscopic identification:

1. **Transverse section:**
   (1) Pericarp: Exocarp composed of 1 row of subsquare cells, covered with cuticle. Mesocarp composed of parenchymatous cells, scattered with oil cells and vascular bundles; oil cells 16~20 μm in diameter, with a fiber bundle outside the phloem, some cells containing prisms of calcium oxalate. Endocarp composed of 1 row of tangentially elongated parenchymatous cells.
   (2) Seed: Aril occasionally found, composed of several layers of parenchymatous cells. Epidermis of testa composed of 1 row of cells, subsquare or subrounded, with walls relatively thickened. Hypodermis composed of 1 row of parenchymatous cells, containing yellowish-brown contents. Oil cells 1 row, varying in shape and size, containing yellow oil droplets. Pigment layer composed of several layers of yellowish-brown cells, containing reddish-brown or yellowish-brown contents, oil cells arranged interruptedly. Endotesta composed of 1 row of sclerenchymatous cells, yellowish-brown or reddish-brown, wall extremely thickened, lumen small, containing silica bodies, about 10~15 μm in diameter. Perisperm relatively large and thick, containing starch granules, occasionally containing fine prisms or clusters of calcium oxalate. Endosperm cells relatively small, containing aleurone grains and fatty oil droplets.
2. **Powder:** Yellowish-brown. Epidermal cells of testa long strip-shaped, walls slightly thickened. Cells of pigment layer wrinkled, yellowish-brown, border indistinct, most cells broken into irregular fragments of pigment. Oil cells vary in shape and size, subsquare or suboblong, 20~50 μm in diameter, usually linked with cells of pigment layer, or occasionally scattered among cells of pigment layer. Sclerenchymatous cells of endotesta yellowish-brown or reddish-brown, subpolygonal, walls extremely thickened, containing silica bodies, about 10~15 μm in diameter. Perisperm cells contain starch granules, occasionally containing fine prisms or clusters of calcium oxalate. Endosperm cells contain aleurone grains and fatty oil droplets.

Thin layer chromatographic identification test (General rule 1010.3):

1. Sample solution: Add 1.0 g of powdered sample to 10 mL of methanol, ultrasonicate for 30 minutes, filter and use the filtrate.
2. Reference drug solution: Use 1.0 g of the reference drug as the same method described above.
3. Reference standard solution: Weigh accurately a quantity of nootkatone and dissolve in methanol to produce a solution containing 1.0 mg per mL.
4. Procedure: Use silica gel F_{254} as the coating substance and a solution of petroleum ether (30~60 ℃) and ethyl acetate (3:2) as the developing solvent. Apply 10 μL of each of the sample solution and reference drug solution and 5 μL of the reference standard solution to the plate. Once the top of the solvent rise to about 5~10 cm from the origin, dry in air. Spray with a 10% solution of sulfuric acid in ethanol (H_2SO_4/EtOH TS), heat at 105℃ until the spots become visible, and examine under the ultraviolet light at 365 nm. The spots in the chromatogram obtained from the sample solution correspond in R_f values and color to the spots in the chromatogram obtained from the reference drug solution and the reference standard solution.

Impurities and other requirements:

1. Loss on drying: Not more than 15.0% under heating at 105℃ for 5 hours (General rule 5008).
2. Total ash: Not more than 9.0% (General rule 5004).
3. Acid-insoluble ash: Not more than 3.0% (General rule 5004).

Assay:
1. Water extractives: Carry out the method for determination of water extractives (General rule 5006).
2. Dilute ethanol extractives: Carry out the method for determination of dilute ethanol-soluble extractives (General rule 5006).
3. Volatile oil: Carry out the method for determination of volatile oil (General rule 5007).

Storage: Refrigerate or store in a cool and dry place, and protect from mold and insects.
Usage: Tonifying and replenishing medicinal (Yang-tonifying medicinal).
Dosage: 3~6 g.

AMOMI FRUCTUS
砂仁
Sha Ren / Sha Ren
Villous Amomum Fruit

Villous amomum fruit is the dried ripe fruit of *Amomum villosum* Lour., *Amomum villosum* Lour. var. *xanthioides* (Wall. ex Bak.) T. L. Wu et Senjen or *Amomum longiligulare* T. L. Wu (Fam. Zingiberaceae).
It contains not less than 8.0% of dilute ethanol-soluble extractives, not less than 12.0% of water extractives and not less than 0.7% (v/w) of volatile oil.

Description:
1. Fruit of *Amomum villosum*: Ellipsoidal or ovate, indistinctly obtuse 3-ridged, 1.2~2.5 cm in length, 0.8~1.8 cm in diameter. Outer surface reddish-brown or brown, densely with soft, fragile and curved spiny protrudance, with reticulations, the dorsal site with indistinct longitudinal striations, apex with protuberant scars of perianth, base with a fruit stalk or its scars. Pericarp thin, loculicidal dehiscence. Inner surface pale brown, with distinct longitudinal vascular bundles and thin diaphragms, axile placenta, 3-locular. Seeds agglutinated into a mass, ellipsoidal or oval, seed irregular polygonal, 2~5 mm in length, 1.5~4 mm in diameter, 6~20 in each loculus. Externally mostly reddish-brown, with irregular wrinkles, covered with pale brownish-yellow membranous aril, hilum disc-shaped dent at the smaller end, chalaza at the broad end, raphe longitudinally furrowed. Texture hard, fracture of perisperm creamy white, starchy, fracture of endosperm and embryo pale yellow or brownish-yellow, oily. Odor, strongly aromatic; taste, pungent, cool and slightly bitter.
2. Fruit of *Amomum villosum* var. *xanthioides*: Ovate or oval, with indistinct obtuse 3-ridged, 1.2~2.2 cm in length, 1~1.6 cm in diameter. Outer surface yellowish-brown or brown, with densely slightly flattened spiny protrudance. Inner surface pale yellow or yellowish-brown. Seeds agglutinated into a mass, subspheroidal, 8~22 in each loculus. Externally pale brown or brown, with regular wrinkles, covered with pale yellowish-white membranous aril. Odor, strongly aromatic; taste, pungent, cool and slightly bitter, slight lower than fruit of *Amomum villosum*.
3. Fruit of *Amomum longiligulare*: Oval, ellipsoidal, fusiform-ellipsoidal or pyriform, with indistinct obtuse 3-ridged, 1~1.7 cm in length, 0.7~1.7 cm in diameter. Externally grayish-brown, with flaky and branched soft spines. Seeds agglutinated into a mass, oval, ellipsoidal or spheroidal, 4~15 in each loculus, 2~4 mm in diameter. Odor, slight; taste, weak.

Microscopic identification:
1. **Transverse section:**
   (1) Seed of *Amomum villosum*: Aril occasionally remained. Epidermal cells of testa 1 layered, elongated radially, with slightly thick walls; hypodermis 1 layered, containing brown or reddish-brown contents. Oil cells layer composed of 1 layer of oil cells, 76~106 μm in length and 16~25 μm in width, containing yellow oil droplets. Pigment layer composed of several rows of brown cells, cells polygonal and irregularly arranged. Endotesta composed of 1 layer of palisade sclerenchymatous cells, yellowish-brown, with extremely thickened inner and lateral walls, cells small and containing silica masses. Perisperm containing starch granules in cells, a few of fine prisms of calcium oxalate occasionally present. Endosperm containing fine aleurone grains and fatty oil droplets in cells.
2. **Powder:**
   (1) Seed of *Amomum villosum*: Reddish-gray. Epidermal cells of testa pale or light yellow, long strip-shaped in surface view, terminal gradually acute or obtuse-rounded, 9~54 μm in diameter and up to 346 μm in length, wall slightly thickened and unlignified. Hypodermal cells rectangular, 11~34 μm in diameter, usually vertically arranged with epidermal cells in an upper and lower layered pattern, filled with brown or brownish-red contents, easily broken and forming pigment masses. Clusters of calcium oxalate occasionally found. Oil cells colorless or pale yellow, 1 layered in sectional view, subrectangular or irregularly long strip-shaped, 11~36 μm in diameter and 40~90 μm in length; subsquare or subrounded in surface view, some lumina containing oil droplets. Sclerenchymatous cells of endotesta flaky, yellowish-brown or brown, subpolygonal in surface view, 13~23 μm in diameter, wall about 2 μm thick, unlignified, lumen containing silica masses, 9~18 μm in diameter; cells palisade-shaped

in sectional view, 11~23 μm in diameter and 15~40 μm in length, with thin outer wall and extremely thick inner wall, lumina inclined to the upper side and containing silica masses. Clusters and prisms of calcium oxalate, endosperm and perisperm cells, aril cells and pigment cells also present; perisperm cells filled with masses of starch granules.

(2) Seed of *Amomum villosum* var. *xanthioides*: Reddish-gray or dark gray. Epidermal cells of testa 17~38 μm in diameter and up to 320 μm in length. Hypodermal cells subrectangular or irregular in shape in surface view, 9~44 μm in diameter. Oil cells rectangular in sectional view, 20~36 μm in diameter and 33~102 μm in length. Sclerenchymatous cells of endotesta polygonal in surface view, 9~18 μm in diameter, wall about 3 μm thick, lumina containing silica masses, 5~16 μm in diameter; 12~22 μm in diameter and 14~35 μm in length in sectional view.

(3) Seed of *Amomum longiligulare*: Grayish-brown. Epidermal cells of testa light or pale yellow, long strip-shaped in surface view, terminal gradually acute or slightly obtuse-rounded, 34~54 μm in diameter and up to about 405 μm in length. Hypodermal cells long strip-shaped, long-rounded or rectangular in surface view, 13~38 μm in diameter, wall relatively curved, containing reddish-brown or yellow pigments. Oil cells long strip-shaped, long-rounded or subrectangular in sectional view, 18~26 μm in diameter and 40~110 μm in length. Sclerenchymatous cells of endotesta polygonal or subovate in surface view, 9~23 μm in diameter, wall about 1.5 μm thick, lumina containing silica masses, 8~25 μm in diameter; 10~20 μm in diameter and 19~30 μm in length in sectional view.

Thin layer chromatographic identification test (General rule 1010.3):

1. Sample solution: Add a quantity of powdered sample, extract with water, and dissolve the volatile oil in ethanol to produce a solution containing 20 μL per mL.
2. Reference drug solution: Use a quantity of the reference drug as the same method described above.
3. Reference standard solution: Weigh accurately a quantity of bornyl acetate and dissolve in ethanol to produce a solution containing 10 μL per mL.
4. Procedure: Use silica gel F_{254} as the coating substance and a solution of cyclohexane and ethyl acetate (22:1) as the developing solvent. Apply 1 μL of each of the above solutions to the plate. Once the top of the solvent rise to about 5~10 cm from the origin, dry in air. Spray with a 5% solution of vanillin in sulfuric acid (Vanillin/H_2SO_4 TS), heat until the spots become visible, and examine under visible light. The purplish-red spots in the chromatogram obtained from the sample solution corresponds in R_f values and color to the spots in the chromatogram obtained from the reference drug solution and the reference standard solution.

Impurities and other requirements:

1. Loss on drying: Not more than 14.0% under heating at 105℃ for 5 hours (General rule 5008).
2. Total ash: Not more than 13.0% (General rule 5004).
3. Acid-insoluble ash: Not more than 4.0% (General rule 5004).

Assay:

1. Water extractives: Carry out the method for determination of water extractives (General rule 5006).
2. Dilute ethanol extractives: Carry out the method for determination of dilute ethanol-soluble extractives (General rule 5006).
3. Volatile oil: Carry out the method for determination of volatile oil (General rule 5007).

Storage: Refrigerate or store in a cool and dry place.
Usage: Dampness-resolving with aroma medicinal.
Dosage: 3~6 g.

AMOMI ROTUNDUS FRUCTUS
豆蔻
Dou Kou / Dou Kou
Cardamom Fruit

Cardamom fruit is the dried ripe fruit of *Amomum cardamomum* L. (Fam. Zingiberaceae).
It contains not less than 4.0% (v/w) of cardamom oil. The fruit should be kept in capsule, removed the peel when use.

Description: Capsule subspheroidal, pale yellow, 15 mm in diameter. Externally smooth, with 3 longitudinally blunt edges and 3 longitudinal furrows arranging alternative, apex possessing a protuberant, 1~2 mm in length. Ovary 3-celled, each containing about 10~13 seeds, arranging in masses. Seed irregularly triangular or quadrilateral, about 4 mm in length, about 3 mm thick, externally pale reddish-brown to blackish-brown, with fine reticulations, showing deeply longitudinal furrows at one surface. Testa membranous, brown. Perisperm starchy, white. Endosperm yellow, surrounding pale yellow embryo. Odor, aromatic; taste, pungent, with a cooling sensation, slightly camphor-like.

Microscopic identification:

1. **Transverse section:** Aril composed of obliterate parenchymatous tissue. The outermost layer of testa is thick-walled epidermal cells; secondary layer showing 1 row of fine pigment cells, containing red to orange contents; third layer showing 1 row of large cells, the walls lignified, and containing volatile oil. The innermost layer of testa is formed of 1 row of elongated stone cells, the walls U-shaped thickened, lumina extremely small, containing crystals of silicon dioxide. Perisperm composed of polygonal parenchymatous cells, containing starch granules, small prisms of calcium oxalate occasionally found. Endosperm contains oil droplets and aleurone granules.
2. **Powder:** Brown to pale yellow. The major portion of powder is occupied by perisperm and fragments of testa. Perisperm cells contain starch granules, small prisms of calcium oxalate occasionally found; simple starch granules 1~4 μm in diameter. Endosperm cells contain aleurone granules and oil droplets. Testa cells long-polygonal, containing fragments of orange-red pigment cells and blackish-brown lignified and thick-walled stone cell groups.

Thin layer chromatographic identification test (General rule 1010.3):

1. Sample solution: Add 2.0 g of powdered sample to 10 mL of methanol, ultrasonicate for 1 hour, filter and use the filtrate.
2. Reference drug solution: Use 2.0 g of the reference drug as the same method described above.
3. Procedure: Use silica gel F_{254} as the coating substance and a solution of toluene and ethyl acetate (95:5) as the developing solvent. Apply 5 μL of each of the above solutions to the plate. Once the top of the solvent rise to about 5~10 cm from the origin, dry in air. Spray with a 1% solution of vanillin in sulfuric acid (Vanillin/H_2SO_4 TS) and examine under visible light. The spots in the chromatogram obtained from the sample solution correspond in R_f values and color to the spots in the chromatogram obtained from the reference drug solution.

Impurities and other requirements:

1. Acid-insoluble ash: Not more than 4.0% (General rule 5004).

Assay:

1. Volatile oil: Carry out the method for determination of volatile oil (General rule 5007).

Storage: Preserve in a well-closed container, and protect from insects.
Usage: Wind-dispelling with aroma medicinal, flavoring agent.
Dosage: 500 mg for the usual dose.

AMPELOPSIS RADIX
白蘞
Bai Lian / Bai Lian
Japanese Ampelopsis Root Tuber

Japanese ampelopsis root tuber is the dried root tuber of *Ampelopsis japonica* (Thunb.) Makino (Fam. Vitaceae). It contains not less than 13.0% of dilute ethanol-soluble extractives and not less than 12.0% of water extractives.

Description: Oblong or fusiform, cutting into 2 or 4 longitudinal segments or oblique slices. As whole, 5~12 cm in length, 1.5~3.5 cm in diameter. The outer bark reddish-brown or blackish-brown, with longitudinal wrinkles, transverse fine striations and whitish elongated transverse lenticels, cork easily exfoliated to scaly, the exposed layer whitish or reddish-brown, crumpled, a protuberant ridge occurring at the edges. Texture hard and fragile, starchy. Odor, slight; taste, sweetish.

Microscopic identification:

1. **Transverse section:** Cork composed of several layers of cells, occasionally fallen off. Phloem bundles narrow; rays broad; cambium in a ring; xylem vessels arranged sparsely, surrounded by xylem fibers. Parenchymatous tissue contains mucilage cells containing raphides of calcium oxalate; parenchymatous cells contain starch granules or clusters of calcium oxalate.
2. **Powder:** Pale reddish-brown. Simple starch granules clavate, oblong, ovate, reniform, flat-triangular or rhombic, small spheroidal granules, occasionally both ends acute, 3~26 μm in diameter, 25~43 μm in length, with indistinct hilum and striations; compound granules few, 2 particles arranged in parallel. Mucilage cells subrounded or oblong, containing pale yellow mucilage contents, scattered with raphides of calcium oxalate, 86~169 μm in length, occasionally in bundles. 4 Clusters of calcium oxalate 25~78 μm in diameter, angles broad, some prisms like or some clusters and prisms accrete. Bordered-pitted vessels 356~383 μm in diameter, bordered pits arranged scalariform or reticulate, pit apertures linear. Stone cells subrounded or oblong, 18~30 μm in diameter, walls 2~12 μm thick, pit canals sparse, lumen contains yellowish-brown contents. Cork cells, xylem parenchymatous cells and xylem fibers also present.

Thin layer chromatographic identification test (General rule 1010.3):

1. Sample solution: Add 2.0 g of powdered sample to 30 mL of ethanol, heat under reflux for 1 hour, filter, evaporate the filtrate to dryness, and dissolve the residue in 2 mL of ethanol.
2. Reference drug solution: Use 2.0 g of the reference drug as the same method described above.
3. Procedure: Use silica gel F_{254} as the coating substance and a solution of chloroform and

methanol (6:1) as the developing solvent. Apply 5 μL of each of the above solutions to the plate. Once the top of the solvent rise to about 5~10 cm from the origin, dry in air. Spray with a 10% solution of sulfuric acid in ethanol (H_2SO_4/EtOH TS), heat at 105℃ until the spots become visible. The spots in the chromatogram obtained from the sample solution correspond in R_f values and color to the spots in the chromatogram obtained from the reference drug solution.

Impurities and other requirements:

1. Total ash: Not more than 7.0% (General rule 5004).
2. Acid-insoluble ash: Not more than 3.0% (General rule 5004).

Assay:

1. Water extractives: Carry out the method for determination of water extractives (General rule 5006).
2. Dilute ethanol extractives: Carry out the method for determination of dilute ethanol-soluble extractives (General rule 5006).

Storage: Store in a ventilated and dry place, and protect from insects.
Usage: Heat-clearing medicinal (Heat-clearing and detoxcating medicinal).
Dosage: 3~10 g.

ANEMARRHENAE RHIZOMA
知母
Jhih Mu / Zhi Mu
Anemarrhena Rhizome

Anemarrhena rhizome is the dried rhizome of *Anemarrhena asphodeloides* Bunge (Fam. Liliaceae).
It contains not less than 30% of dilute ethanol-soluble extractives, not less than 40% of water extractives, not less than 0.70% of mangiferin and not less than 3.0% of timosaponin B_{II}.

Description: Flattened cylindrical, slightly curved, different thickness at the both ends, branched occasionally, 3~17 cm in length, 0.8~2.0 cm in diameter, with pale yellow leaf scars and root scars, commonly known as "Jin Se Tou". The upper part exhibiting a concave groove and closely arranged annular nodes with dense and flat yellowish-brown tomenta, growing upward bilaterally; the lower part crumpled, with depressed or protruding dotted root scars. Texture hard, easily broken, fracture yellowish-white, even. Odorless; taste, sweetish and bitterish, viscous on chewing.

Microscopic identification:

1. **Transverse section:** Cork composed of several layers of polygonal or flat-rectangular cells. Cortex scattered with some leaf-trace vascular bundles; endodermis indistinct. Stele scattered with numerous collateral vascular bundles surrounded by cells containing raphides of calcium oxalate. Root-trace vascular bundles tangentially arranged along the pericycle. Mucilage cells found everywhere, mostly distributed in cortex, containing raphides of calcium oxalate.
2. **Powder:** Pale yellow. Mucilage cells contain raphides of calcium oxalate. Mounting with glycerin-acetic acid TS, showing swollen cells, raphides of calcium oxalate surrounded by mucilage contents; while mounting with absolute ethanol TS, showing subrounded or oblong mucilage cells, 56~160 μm in diameter, up to about 340 μm in length, translucent, walls indistinct or relatively distinct, lumen containing raphides of calcium oxalate, 36~110 μm in length, relatively fine, some up to 7 μm thick, fine prism-like when broken. Fibers (leaf base) relatively slender, 8~14 μm in diameter, walls slightly thickened and lignified, pits sparsely, lumen broad. Bordered-pitted, reticulate and spiral vessels 8~14 μm in diameter. Lignified sclerenchymatous cells (scales) subrectangular, long-polygonal or short fiber-like elongated, arranged alternately,16~48 μm in diameter, walls slightly thickened and lignified, pit canals relatively dense, lumen containing brownish-yellow contents. Cork cells varying in size, walls thin and usually overlapped. Epidermal cells of scales present.

Thin layer chromatographic identification test (General rule 1010.3):

1. Sample solution: Add 1.0 g of powdered sample to 10 mL of methanol, ultrasonicate for 30 minutes then filter, make up the filtrate to 10 mL and use the filtrate.
2. Reference drug solution: Use 1.0 g of the reference drug as the same method described above.
3. Procedure: Use silica gel F_{254} as the coating substance and the supernatant of *n*-butanol, glacial acetic acid and water (4:1:5) as the developing solvent. Apply 5 μL of each of the above solutions to the plate. Once the top of the solvent rise to about 5~10 cm from the origin, dry in air. Spray with a solution of vanillin in sulfuric acid (Vanillin/H_2SO_4 TS) and heat at 105℃ until the spots become visible. The spots in the chromatogram obtained from the sample solution correspond in R_f values and color to the spots in the chromatogram obtained from the reference drug solution.

Impurities and other requirements:

1. Loss on drying: Not more than 12.0% under heating at 105℃ for 5 hours (General rule 5008).
2. Total ash: Not more than 6.0% (General rule 5004).
3. Acid-insoluble ash: Not more than 2.0% (General rule 5004).

4. Total heavy metals: Not more than 10.0 ppm (General rule 3005).
5. Arsenic (As): Not more than 5.0 ppm (General rule 3006, 3049, 3050).

Assay:

1. Mangiferin:
   (1) Mobile phase: A solution of acetonitrile and 0.2% glacial acetic acid (15:85). The ratio varies as required.
   (2) Reference standard solution: Weigh accurately a quantity of mangiferin and dissolve in dilute ethanol to produce a solution containing 50 μg per mL.
   (3) Sample solution: Weigh accurately 0.1 g of powdered sample, transfer to a conical flask with stopper, add accurately 25 mL of dilute ethanol then weigh, ultrasonicate for 30 minutes, cool, weigh again, replenish the loss of the weight with dilute ethanol, mix well, filter and use the successive filtrate.
   (4) Chromatographic system: The liquid chromatography is equipped with an ultraviolet absorption photometer (wavelength: 258 nm) and a column packed with octadecylsilanized silica gel. The number of theoretical plates of the peak of mangiferin should not be less than 6,000.
   (5) Procedure: Inject accurately 10 μL of each of the reference standard solution and the sample solution into the liquid chromatography apparatus, and calculate the content.
2. Timosaponin B_{II}:
   (1) Mobile phase: A solution of acetonitrile and water (25:75). The ratio varies as required.
   (2) Reference standard solution: Weigh accurately a quantity of timosaponin B_{II} and dissolve in 30% acetone to produce a solution containing 0.50 mg per mL.
   (3) Sample solution: Weigh accurately 0.15 g of powdered sample, transfer to a conical flask with stopper, add accurately 25 mL of 30% acetone then weigh, ultrasonicate for 30 minutes, cool, weigh again, replenish the loss of the weight with 30% acetone, mix well, filter and use the successive filtrate.
   (4) Chromatographic system: It is equipped with an evaporative light-scattering detector (ELSD) and a column packed with octylsilanized silica gel. The number of theoretical plates of the peak of timosaponin B_{II} should not be less than 10,000.
   (5) Procedure: Inject accurately 5 and 10 μL of the reference standard solution and 5~10 μL of the sample solution into the apparatus, and use a calibration equation of logarithm alteration of two external standards calculate the content.
3. Water extractives: Carry out the method for determination of water extractives (General rule 5006).
4. Dilute ethanol extractives: Carry out the method for determination of dilute ethanol-soluble extractives (General rule 5006).

Storage: Refrigerate or store in a cool and dry place, and protect from insects.
Usage: Heat-clearing medicinal (Heat-clearing and fire-purging medicinal).
Dosage: 9~15 g.

ANGELICAE DAHURICAE RADIX
白芷
Bai Jhih / Bai Zhi
Dahurian Angelica Root

Dahurian angelica root is the dried root of *Angelica dahurica* (Fisch. ex Hoffm.) Benth. et Hook. f. or *Angelica dahurica* (Fisch.) Benth. et Hook. var. *formosana* (H. Boissieu) Yen (Fam. Umbelliferae).
It contains not less than 13.0% of dilute ethanol-soluble extractives, not less than 13.0% of water extractives and not less than 0.08% of imperatorin.

Description:

1. Root of *Angelica dahurica*: Long-conical, thick at the upper part and thin at the lower part, 10~25 cm in length, 1.5~2.5 cm in diameter, apex with dented stem scars, stem scars with concentric-ring reticulated. Externally grayish-brown or yellowish-brown, slightly glossy, with longitudinal wrinkles, scattered with transverse lenticel-like protruded and rootlet scars, commonly known as "Ge Da Ding". Texture compact, fracture grayish-white, starchy, scattered with numerous brown oil dots (secretory cavities) in bark, cambium ring rounded, wood occupying a third of cross section. Odor, aromatic; taste, pungent and slightly bitter.
2. Root of *Angelica dahurica* var. *formosana*: Subconical, transverse lenticel-like protruded arranged in 4 longitudinal rows, cambium ring slight square, wood occupying a half of cross section.

Microscopic identification:

1. **Transverse section:**
   (1) Root of *Angelica dahurica*: Cork composed of 5~10 or more layers of cells. Cortex and phloem scattered with secretory canals, parenchymatous cells contain starch granules, rays distinct. Xylem slightly round, vessels arranged radially.
   (2) Root of *Angelica dahurica* var. *formosana*: Similar to root of *Angelica dahurica* in sectional view, but xylem slightly squared, rays more, vessels arranged sparsely.

2. **Powder:** Pale grayish-white. Starch granules numerous, simple granules subspheroidal or polygonal, 3~16 μm in diameter; compound granules relatively large, mostly composed of more than 10 components. Reticulate vessels mostly 13~18 μm in diameter, occasionally spiral vessels also present. Commonly with secretory canals fragments, contain yellowish-brown secretions. Cork cells subpolygonal, brownish-yellow. Clusters of calcium oxalate existed in parenchymatous cells.

Thin layer chromatographic identification test (General rule 1010.3):

1. Sample solution: Add 2.0 g of powdered sample to 10 mL of methanol, ultrasonicate for 30 minutes, filter, and use the filtrate.
2. Reference drug solution: Use 2.0 g of the reference drug as the same method described above.
3. Reference standard solution: Weigh accurately a quantity of imperatorin and isoimperatorin and dissolve in ethyl acetate to produce a solution containing 1.0 mg per mL of each.
4. Procedure: Use silica gel F_{254} as the coating substance and a solution of petroleum ether (30~60 ℃) and ethyl ether (3:2) as the developing solvent. Apply 4 μL of each of the above solutions to the plate. Once the top of the solvent rise to about 5~10 cm from the origin, dry in air. Examine under the ultraviolet light at 365 nm. The spots in the chromatogram obtained from the sample solution correspond in R_f values and color to the spots in the chromatogram obtained from the reference drug solution and the reference standard solution.

Impurities and other requirements:

1. Loss on drying: Not more than 14.0% under heating at 105℃ for 5 hours (General rule 5008).
2. Total ash: Not more than 7.0% (General rule 5004).
3. Acid-insoluble ash: Not more than 2.0% (General rule 5004).
4. Total heavy metals: Not more than 10.0 ppm (General rule 3005).
5. Arsenic (As): Not more than 5.0 ppm (General rule 3006, 3049, 3050).

Assay:

1. Imperatorin:
   (1) Mobile phase: A solution of methanol and water (55:45). The ratio varies as required.
   (2) Reference standard solution: Weigh accurately a quantity of imperatorin and dissolve in methanol to produce a solution containing 10 μg per mL.
   (3) Sample solution: Weigh accurately 0.4 g of powdered sample in a 50-mL volumetric flask, add 45 mL of methanol, ultrasonicate for 1 hour, cool, add methanol to volume, mix well, filter and use the successive filtrate.
   (4) Chromatographic system: The liquid chromatography is equipped with an ultraviolet absorption photometer (wavelength: 300 nm) and a column packed with octadecylsilanized silica gel. The number of theoretical plates of the peak of imperatorin should not be less than 3,000.
   (5) Procedure: Inject accurately 20 μL of each of the reference standard solution and the sample solution into the liquid chromatography apparatus, and calculate the content.
2. Water extractives: Carry out the method for determination of water extractives (General rule 5006).
3. Dilute ethanol extractives: Carry out the method for determination of dilute ethanol-soluble extractives (General rule 5006).

Storage: Refrigerate or store in a cool and dry place, and protect from insects.
Usage: Exterior-releasing medicinal (Wind-cold dispersing medicinal).
Dosage: 3~10 g.

ANGELICAE PUBESCENTIS RADIX
獨活
Du Huo / Du Huo
Pubescent Angelica Root

Pubescent angelica root is the dried root of *Angelica pubescens* Maxim. f. *biserrata* Shan et Yuan (Fam. Umbelliferae).
It contains not less than 30.0% of dilute ethanol-soluble extractives, not less than 30.0% of water extractives and not less than 0.5% of osthole.

Description: Root stock and main root stout, slightly cylindrical, 1.5~4 cm in length, 1.5~3.5 cm in diameter, the lower part branched and curved, 12~30 cm in length, 0.5~1.5 cm in diameter. Externally grayish-brown, with irregularly longitudinal wrinkles, transverse fissures, transverse elliptic lenticels and slightly protuberant scars of rootlets. Root stock with annulations, apex truncated, with numerous annular scars of petioles and dented scars of stems in the center. Texture hard, fracture grayish-white, cambium ring brown, bark scattered with numerous brown oil cavities, pith ray arranged densely; the fracture of root stock with larger pith and oil cavities. Odor, characteristic and aromatic; taste, bitter and pungent, numb.

Microscopic identification:

1. **Transverse section:** Cork with cell walls slightly lignified. Cortex narrow, scattered with a few of oblong oil ducts, 32~72 μm in length, up to 120 μm in width, surrounded by 6~8 secretory cells.

Phloem occupied about 1/2 portion of the radius of root, oil ducts 3~8 arranged in a ring, round or oblong, 24~80 μm in diameter, oil ducts at the outer part up to about 160 μm in width, extremely small near the cambium, surrounded by 6~10 secretory cells; phloem rays relatively straight, 3~6 layers of cells wide. Cambium in a ring. Xylem vessels few, polygonal, 10~64 μm in diameter, singly scattered or 2~3 in groups, arranged sparsely and radially. Parenchymatous cells contain starch granules, 2~10 μm in diameter.

2. **Powder:** Pale yellow or pale brown. Simple starch granules subrounded or oblong, hilum and striations indistinct; compound granules composed of several dozens of components, easily discrete. Oil ducts mostly broken, in transverse view, surrounded by the secretory cells appear oblong, 9~22 μm in diameter, lumens mostly contain yellowish-green or pale yellowish-brown secretions and oil droplets; secretory cells slender in longitudinal view. Reticulate and spiral vessels 14~81 μm in diameter. Cork cells polygonal or elongated-polygonal in surface view, wall slightly thickened, sinuous and lignified, some lumens contain brown contents; subrectangular in sectional view. Phelloderm cells scattered in cork tissue. Subrounded or subrectangular parenchymatous cells also visible.

Thin layer chromatographic identification test (General rule 1010.3):

1. Sample solution: Add 1.0 g of powdered sample to 10 mL of methanol, ultrasonicate for 15 minutes, filter and use the filtrate.
2. Reference drug solution: Use 1.0 g of the reference drug as the same method described above.
3. Procedure: Use silica gel F_{254} as the coating substance and a solution of *n*-hexane and ethyl acetate (2:1) as the developing solvent. Apply 5 μL of each of the above solutions to the plate. Once the top of the solvent rise to about 5~10 cm from the origin, dry in air. Examine under the ultraviolet light at 365 nm and 254 nm. The spots in the chromatogram obtained from the sample solution correspond in R_f values and color to the spots in the chromatogram obtained from the reference drug solution.

Impurities and other requirements:

1. Total ash: Not more than 10.0% (General rule 5004).
2. Acid-insoluble ash: Not more than 4.0% (General rule 5004).

Assay:

1. Osthole:
   (1) Mobile phase: A solution of methanol and water (2:1). The ratio varies as required.
   (2) Reference standard solution: Weigh accurately a quantity of osthole and dissolve in methanol to produce a solution containing 0.2 mg per mL.
   (3) Sample solution: Weigh accurately 0.5 g of the powdered sample, accurately add 10 mL of ethyl ether, stand for 12 hours, filter, extract with 5 mL of ethyl ether, combine the ethyl ether solution, transfer the solution to a flask, evaporate to dryness, and dissolve the residue in 5 mL of methanol.
   (4) Chromatographic system: The liquid chromatography is equipped with an ultraviolet absorption photometer (wavelength: 330 nm) and a column (4.6 mm × 15 cm) packed with octadecylsilanized silica gel. The column temperature is maintained at room temperature. The retention time of osthole is about 4 minute. Inject reference standard solution into the liquid chromatography apparatus for five times, and record the peak areas. The relative standard deviation of the peak area of osthole should not be more than 1.5%.
   (5) Procedure: Inject accurately 10 μL of each of the reference standard solution and the sample solution into the liquid chromatography apparatus, and calculate the content.
2. Water extractives: Carry out the method for determination of water extractives (General rule 5006).
3. Dilute ethanol extractives: Carry out the method for determination of dilute ethanol-soluble extractives (General rule 5006).

Storage: Refrigerate or store in a cool and dry place, and protect from mold, insects and oil seeping.
Usage: Wind-dampness-dispelling medicinal.
Dosage: 3~10 g.

ANGELICAE SINENSIS RADIX
當歸
Dang Guei / Dang Gui
Chinese Angelica Root

Chinese angelica root is the dried root of *Angelica sinensis* (Oliv.) Diels (Fam. Umbelliferae).
It contains not less than 35.0% of dilute ethanol-soluble extractives, not less than 30.0% of water extractives and not less than 0.03% of ferulic acid.

Description: Root stocks, main roots, branching roots and whole commonly known as “Guei Tou”, “Guei Shen”, “Guei Wei” and “Cyuan Guei”. Slightly cylindrical, 15~25 cm in length. Externally yellowish-brown to dark brown, with longitudinally wrinkles and transverse lenticels. The upper part swollen, 1.5~4 cm in diameter, obtuse, remained with leaf sheaths and stem base; main roots stout, 1~3 cm in length, 1.5~3 cm in diameter; the lower part with 3~5 or more

branched, the upper portion thick and the lower portion thin, mostly twisted, with a few rootlet scars. Texture hard, softened when moistened, fracture yellowish-white or pale yellowish-brown, bark thick, scattered with brown spotted secretory cavities, cambium ring yellowish-brown, wood paler in color. The center fracture of root stocks usually with pith and cavities. Odor, strongly aromatic; taste, sweet, pungent, slightly bitter and numb.

Microscopic identification:

1. **Transverse section:**
   (1) Lateral roots: Cork composed of 4~7 layers of cells. Cortex narrow, composed of several rows of tangentially elongated cells. Phloem relatively broad, scattered with numerous subrounded oil cavities (secretory cavities), 25~160 μm in diameter, surrounded by 6~9 secretory cells, oil cavities relatively small near cambium. Cambium in a ring. Xylem rays broad, up to 10 layers of cells wide, vessels singly scattered or 2~3 in groups. Parenchymatous cells contain starch granules.
2. **Powder**: Pale yellow. Phloem parenchymatous cells fusiform, single cell elongated-fusiform, with 1~2 thin septa, walls usually with obliquely trellis striations. Oil cavities or its fragments visible, containing volatile oil droplets. Scalariform and reticulate vessels 13~80 μm in diameter, bordered-pitted and spiral vessels also found. Cork cells and starch granules visible, xylem fibers occasionally found.

Thin layer chromatographic identification test (General rule 1010.3):

1. Sample solution: Add 1.0 g of powdered sample to 15 mL of methanol, ultrasonicate for 30 minutes, filter and use the filtrate.
2. Reference drug solution: Use 1.0 g of the reference drug as the same method described above.
3. Reference standard solution: Weigh accurately a quantity of *n*-butylidene phthalide and dissolve in ethyl acetate to produce a solution containing 1.0 mg per mL.
4. Procedure: Use silica gel F_{254} as the coating substance and a solution of ethyl acetate and petroleum ether (30~60 ℃) (15:85) as the developing solvent. Apply 5 μL of each of the above solutions to the plate. Once the top of the solvent rise to about 5~10 cm from the origin, dry in air. Examine under the ultraviolet light at 254 nm. The spots in the chromatogram obtained from the sample solution correspond in R_f values and color to the spots in the chromatogram obtained from the reference drug solution and the reference standard solution.

Impurities and other requirements:

1. Total ash: Not more than 8.0% (General rule 5004).
2. Acid-insoluble ash: Not more than 2.0% (General rule 5004).
3. Total heavy metals: Not more than 10.0 ppm (General rule 3005).
4. Arsenic (As): Not more than 5.0 ppm (General rule 3006, 3049, 3050).

Assay:

1. Ferulic acid:
   (1) Mobile phase: A solution of acetonitrile and 0.05% phosphoric acid (15:85). The ratio varies as required.
   (2) Reference standard solution: Weigh accurately a quantity of ferulic acid, transfer to an amber volumetric flask, and dissolve in 70% methanol to produce a solution containing 0.01 mg per mL.
   (3) Sample solution: Weigh accurately 0.2 g of the powdered sample, transfer to a conical flask with stopper, accurately add 20 mL of 70% methanol, stopper tightly and weigh, heat under reflux for 30 minutes, cool, weigh again, replenish the loss of the weight with 70% methanol, stand, filter and use the supernatant.
   (4) Chromatographic system: The liquid chromatography is equipped with an ultraviolet absorption photometer (wavelength: 320 nm) and a column (4~6 mm × 15~25 cm) packed with octadecylsilanized silica gel (5~10 μm in particle diameter). The column temperature is maintained at room temperature. Inject reference standard solution into the liquid chromatography apparatus for five times, and record the peak areas. The relative standard deviation of the peak area of ferulic acid should not be more than 1.5%.
   (5) Procedure: Inject accurately 20 μL of each of the reference standard solution and the sample solution into the liquid chromatography apparatus, and calculate the content.
2. Water extractives: Carry out the method for determination of water extractives (General rule 5006).
3. Dilute ethanol extractives: Carry out the method for determination of dilute ethanol-soluble extractives (General rule 5006).

Storage: Refrigerate or store in a cool and dry place, and protect from mold and insects.
Usage: Tonifying and replenishing medicinal (Blood-tonifying medicinal).
Dosage: 3~10 g.

ANISI STELLATI FRUCTUS
八角茴香
Ba Jiao Huei Siang / Ba Jiao Hui Xiang
Star Anise Fruit

Star anise fruit is the dried ripe fruit of *Illicium verum* Hook. f. (Fam. Magnoliaceae).
It contains not less than 18.0% of dilute ethanol-soluble extractives, not less than 16.0%of water extractives and not less than 4.0% (v/w) of volatile oil.

Description: Mostly aggregate fruit composed of 8 follicles radiated arranged from the central axis, the pedicel curved as hook like, 3~4 cm in length. Follicles boats shaped, 5~15 mm in length, about 5 mm in width, 5~10 mm in height, the upper part mostly dehiscent, apex blunt, outer surface reddish-brown, irregularly wrinkled, inner surface brown, lustrous. Each follicle containing a compressed-ovate seed, 7 mm in length, 4 mm in width, 2 mm thick, reddish-brown, lustrous, one end with a sunken hilum and obvious micropyle, the other end with chalaza, raphe in the center. Endosperm white, oily. Odor, aromatic; taste, pungent and sweet.

Microscopic identification:

1. **Transverse section:** Exocarp composed of 1 row of epidermal cells covered with cuticle. Mesocarp composed of collenchymatous cells, inside showing parenchymatous cells with vascular bundles and oil cells. Endocarp composed of 1 row of palisade cells. The outer layer of testa composed of 1 row of rectangular stone cells, arranged densely, inside showing several layers of parenchymatous cells. Endosperm contains aleurone grains and fatty oil.
2. **Powder:** Reddish-brown. Epidermal cells of exocarp polygonal. Stone cells of endocarp subsquare or polygonal, 90~400 μm in length, 40~120 μm in diameter, wall thickened with striations and pit canals. Palisade cells of endocarp 120~450 μm in length, 50~80 μm in width, walls thin and lignified, with pits. Stone cells of testa square or polygonal, pale yellow, 120~200 μm in length, 50~80 μm in width, containing brown contents. Fibers fusiform, lignified, with pits. Endosperm cells polygonal, containing aleurone grains and fatty oil.

Thin layer chromatographic identification test (General rule 1010.3):

1. Sample solution: Add 1.0 g of powdered sample to 15 mL of petroleum ether (30~60℃) and ethyl ether (1:1), stopper tightly, shake for 15 minutes and filter. Evaporate the filtrate to dryness, and dissolve the residue in 2 mL of absolute ethanol.
2. Reference drug solution: Use 1.0 g of the reference drug as the same method described above.
3. Reference standard solution: Weigh accurately a quantity of anisaldehyde and dissolve in 1 mL of absolute ethanol to produce a solution containing 10 μL per mL.
4. Procedure: Use silica gel F_{254} as the coating substance and a solution of petroleum ether (30~60 ℃), acetone and ethyl acetate (19:1:1). Apply 5~10 μL of each of the above solutions to the plate. Once the top of the solvent rise to about 5~10 cm from the origin, dry in air, spray with phloroglucinol in hydrochloric acid. The spots in the chromatogram obtained from the sample solution correspond in R_f values and color to the spots in the chromatogram obtained from the reference drug solution and the reference standard solution.

Impurities and other requirements:

1. Total ash: Not more than 9.0% (General rule 5004).
2. Acid-insoluble ash: Not more than 1.0% (General rule 5004).
3. Aflatoxins: Not more than 15.0 ppb (General rule 3053).

Assay:

1. Water extractives: Carry out the method for determination of water extractives (General rule 5006).
2. Dilute ethanol extractives: Carry out the method for determination of dilute ethanol-soluble extractives (General rule 5006).
3. Volatile oil: Carry out the method for determination of volatile oil (General rule 5007).

Storage: Store in a cool and dry place, and protect from moisture.
Usage: Interior-warming and cold-dispelling medicinal.
Dosage: 3~6 g.

AQUILARIAE RESINATUM LIGNUM
沉香
Chen Siang / Chen Xiang
Chinese Eaglewood

Chinese eaglewood is the resin containing wood of *Aquilaria sinensis* (Lour.) Gilg (Fam. Thymelaeaceae).
It contains not less than 10.0% of the ethanol-soluble extractives.

Description: Irregular lumps, flakes, slices or helmet-shaped, varying in size, 5~20 cm in length, 2~5 cm in width, about 1 cm thick. Externally lumpy, pale yellowish-white, scattered with blackish-brown alternating with yellow striations, with scars of knife cutting, showing a few of holes. Surface of holes and depressions mostly rotten wood-like. Texture relatively compact, uneasily broken, fracture splintery, brown. Odor, aromatic; taste, bitter. Oil leaking, smoke and extreme aromatic when burned.

Microscopic identification:

1. **Transverse section:** Vessels subpolygonal, some containing brown resins. Xylem fibers with walls slightly thickened and lignified. Interxylary phloem usually intersect with rays, elongated-elliptical or strip-shaped, cell walls thin and unlignified, lumen filled with brown resins, scattered with few fibers, some parenchymatous cells contain prisms of calcium oxalate. Rays 1~2 cells wide, containing resins.
2. **Powder:** Blackish-brown. Fiber tracheids mostly in bundles, long-fusiform. Xylem rays 1~2 rows of cells wide; parenchymatous cells of interxylary phloem contain yellowish-brown contents, walls unlignified. Prisms of calcium oxalate rare, tetrahedral. Resin masses also present.

Thin layer chromatographic identification test (General rule 1010.3):

1. Sample solution: Add 0.5 g of powdered sample to 30 mL of ethyl ether, ultrasonicate for 1 hour, evaporate the filtrate to dryness, and dissolve the residue in 2 mL of chloroform.
2. Reference drug solution: Use 0.5 g of the reference drug as the same method described above.
3. Procedure: Use silica gel F_{254} as the coating substance and a solution of chloroform and ethyl ether (10:1) as the developing solvent. Apply 10 μL of each of the above solutions to the plate. Once the top of the solvent rise to about 5~10 cm from the origin, dry in air. Examine under the ultraviolet light at 365 nm. The spots in the chromatogram obtained from the sample solution correspond in R_f values and color to the spots in the chromatogram obtained from the reference drug solution.

Impurities and other requirements:

1. Loss on drying: Not more than 10.0% under heating at 105℃ for 5 hours (General rule 5008).
2. Total ash: Not more than 9.0% (General rule 5004).
3. Acid-insoluble ash: Not more than 2.0% (General rule 5004).

Assay:

1. Ethanol-soluble extractives: Carry out the method for determination of hot extraction method (General rule 5006).

Storage: Store in a cool and dry place, and protect from moisture.
Usage: Qi-regulating medicinal.
Dosage: 1.5~4.5 g.

ARCTII FRUCTUS
牛蒡子
Niou Bang Zih / Niu Bang Zi
Great Burdock Achene

Great burdock achene is the dried ripe fruit of *Arctium lappa* L. (Fam. Compositae).
It contains not less than 10.0% of dilute ethanol-soluble extractives, not less than 6.0% of water extractives and not less than 5.0% of arctiin.

Description: Achenes, flattened and long-ovate, slightly curved, 6~7 mm in length, 2~3 mm in width. Externally grayish-brown, with several longitudinal ribs and black spots. One side obtuse-rounded, slightly broad, apex with a circular protuberant stylopodium; the other side slightly narrowed and curved, apex with a pale color spots. Pericarp hard, endosperm 2, grayish-white or yellowish-white, oily. Odor, slight; taste, slightly pungent and bitter.

Microscopic identification:

1. **Transverse section:** Exocarp composed of irregular parenchymatous cells, covered with cuticle. Mesocarp varies in thickness, walls thickened and slightly lignified, brownish-yellow, with small collateral vascular bundles. Endocarp narrow, composed of yellowish-brown colored decadent cell layer, fill with a row of prisms of calcium oxalate, cell boundary instinct. Outermost layer of testa composed of palisade cells, 75~120 μm in length, 10~30 μm in diameter, walls thickened and with distinct striations. Nutritive layer consists of several layers of parenchymatous cells decadently instinct, innermost layer with 5 μm thick cuticles. Endosperm cells contain fatty oil. Cotyledon cells filled with aleurone grains and fatty oil, clusters and prism of calcium oxalate also present.
2. **Powder:** Grayish-white to grayish-brown. Exocarp cells composed of dense parenchymatous cells, containing brown contents. Mesocarp cells fusiform, reticulate cell walls distinct, 10~20 μm in diameter. Endocarp cells brownish-yellow, 5~20 μm in diameter, containing abundant prisms of calcium oxalate. Palisade cells of testa arranged densely, thick-walled, 50~120 μm in length, 10~30 μm wide. Parenchymatous cells of cotyledon filled with clusters of calcium oxalate, 5~10 μm in diameter, containing fatty oil droplets.

Thin layer chromatographic identification test (General rule 1010.3):

1. Sample solution: Add 1.0 g of powdered sample to 10 mL of methanol, ultrasonicate for 30 minutes, filter and use the filtrate.
2. Reference drug solution: Use 0.5 g of the reference drug as the same method described above.

3. Reference standard solution: Weigh accurately 1.0 mg of arctiin and dissolve in 0.2 mL of ethanol to produce a solution containing 5.0 mg per mL.
4. Procedure: Use silica gel F_{254} as the coating substance and a solution of ethyl acetate, ethanol and water (8:2:1) as the developing solvent. Apply 5 μL of each of the sample solution and reference drug solution and 2 μL of the reference standard solution to the plate. Once the top of the solvent rise to about 5~10 cm from the origin, dry in air. Spray with a 10% solution of sulfuric acid in ethanol (H_2SO_4/EtOH TS) and heat until the spots become visible. Examine under visible light. The spots in the chromatogram obtained from the sample solution correspond in R_f values and color to the spots in the chromatogram obtained from the reference drug solution and reference standard solution.

Impurities and other requirements:
1. Loss on drying: Not more than 10.0% under heating at 105℃ for 5 hours (General rule 5008).
2. Total ash: Not more than 7.0% (General rule 5004).
3. Acid-insoluble ash: Not more than 2.0% (General rule 5004).

Assay:
1. Arctiin:
   (1) Mobile phase: A solution of methanol and water (1:1.1). The ratio varies as required.
   (2) Reference standard solution: Weigh accurately a quantity of arctiin and dissolve in methanol to produce a solution containing 0.5 mg per mL.
   (3) Sample solution: Weigh accurately 0.5 g of powdered sample in a 50-mL volumetric flask, add accurately 45 mL of methanol, ultrasonicate for 20 minutes, cool, add methanol to volume, shake and filter, and use the filtrate.
   (4) Chromatographic system: The liquid chromatography is equipped with an ultraviolet absorption photometer (wavelength: 280 nm) and a column packed with octadecylsilanized silica gel. The number of theoretical plates of the peak of arctiin should not be less than 1,500.
   (5) Procedure: Inject accurately 10 μL of each of the reference standard solution and the sample solution into the liquid chromatography apparatus, and calculate the content.
2. Water extractives: Carry out the method for determination of water extractives (General rule 5006).
3. Dilute ethanol extractives: Carry out the method for determination of dilute ethanol-soluble extractives (General rule 5006).

Storage: Store in a cool and dry place, and protect from moisture.
Usage: Pungent-cold exterior-releasing medicinal.
Dosage: 5~10 g.

ARECAE PERICARPIUM
大腹皮
Da Fu Pi / Da Fu Pi
Areca Husk

Areca husk is the dried ripe pericarp of *Areca catechu* L. (Fam. Palmae).
It contains not less than 11.0% of dilute ethanol-soluble extractives and not less than 11.0% of water extractives.

Description: Ellipsoidal or gourd-shaped, 5~6.5 cm in length, 3 cm in width, 0.8~1 cm thick. Externally yellowish-white to grayish-yellow, with loose fiber longitudinally arranged. Exocarp fibers loose. Mesocarp fibers maned-like. Endocarp dented, brown or dark brown, smooth and hard shell-shaped. Texture light in weight and tenacious, easily tore longitudinally. Odorless; taste, weak.

Microscopic identification:
1. **Powder:** Grayish-yellow. Exocarp cells polygonal or elongated-polygonal in surface view, 9~15 μm in diameter, up to 52.8 μm in length, walls slightly moniliform thickened. Fibers of mesocarp mostly in bundles, fine long strip-shaped, straight or slightly curved, occasionally wavy at one side, the terminal slightly blunt, about 10 μm in diameter, walls thickened and lignified, with distinct pit canals; fiber bundles surrounded by cells containing silica bodies, silica bodies 6~9 μm in diameter, the cells containing silica bodies with thickened and lignified walls. Stone cells of mesocarp subrounded, subrectangular or elongated-oval, 22~50 μm in diameter, wall slightly thickened, lignified or slightly lignified, with distinct pits and pit canals, occasionally with distinct striations. Endocarp cells subpolygonal, subrounded or elongated-polygonal, 9~24 μm in diameter, walls thickened and lignified, with distinct pit canals.

Identification:
1. Take 1.0 g of powdered sample, add 10 mL of a mixture with acetone and water (1:1), shake for 10 minutes, and filter. Take 2 mL of the filtrate, add 1 drop of ferric chloride ($FeCl_3$/H_2O TS), and a green or dark green color is produced; take 2 mL of the filtrate, add 1 drop of bromine, and a yellow-brown color or precipitate is produced.

Impurities and other requirements:
1. Loss on drying: Not more than 11.0% under heating at 105℃ for 5 hours (General rule 5008).

2. Total ash: Not more than 6.0% (General rule 5004).
3. Acid-insoluble ash: Not more than 2.5 % (General rule 5004).
4. Aflatoxins: Not more than 15.0 ppb (General rule 3053).

Assay:
1. Water extractives: Carry out the method for determination of water extractives (General rule 5006).
2. Dilute ethanol extractives: Carry out the method for determination of dilute ethanol-soluble extractives (General rule 5006).

Storage: Store in a cool and dry place.
Usage: Qi-regulating medicinal.
Dosage: 4.5~9 g.

ARECAE SEMEN
檳榔
Bin Lang / Bin Lang
Betel Nut

Betel nut is the dried ripe seed of *Areca catechu* L. (Fam. Palmae).
It contains not less than 5.0% of dilute ethanol-soluble extractives, not less than 5.0% of water extractives and not less than 0.20% of arecoline.

Description: Flattened conical, apex obtuse, base flattened and broad, 1.5~3.5 cm in height, base 1.5~3 cm in diameter. Externally pale yellowish-brown or dark brown, with slightly dented reticulate furrows, occasionally with silvery endocarp patches or fibrous mesocarp, and a round concave (micropyle) in the center of the base, by side with a large and pale hilum. Texture hard, uneasily broken; fracture showing marble-like striations, forming from reddish-brown testa and perisperm insert into whitish endosperm; in transverse section, a small and shrunken embryo within micropyle. Odor, slight; taste, slightly bitter and astringent.

Microscopic identification:
1. **Transverse section:** Outer layers of testa composed of several layers of flattened stone cells, elongated tangentially, stone cells vary in shape and size, containing reddish-brown contents, usually with intercellular spaces; inner layers of testa composed of rectangular or irregular cells, containing reddish-brown contents, wall slightly thickened, scattered with few vascular bundles, cells arranged densely, without intercellular spaces. The inner layers of testa and perisperm usually inserted into the endosperm, forming a crisscross tissue. Endosperm composed of white and polygonal cells, with thickened walls, pits large and distinct, moniliform, containing abundant oil droplets and aleurone grains.
2. **Powder:** Brownish-purple. Fragments of endosperm cells abundant, colorless, intact cells irregular polygonal or subsquare, wall 6~11 μm thick, with large subrounded pits, 8~19 μm in diameter. Perisperm cells subrectangular or subpolygonal, wall relatively thickened, with few fine pits, lumen mostly filled with reddish-brown or dark brown contents. Stone cells of testa paramecium-shaped or fusiform, 24~64 μm in diameter. Vessels spiral or reticulate, occasionally visible, 5~20 μm in diameter.

Thin layer chromatographic identification test (General rule 1010.3):
1. Sample solution: Add 3.0 g of powdered sample to 30 mL of ethyl ether and 5 mL of sodium hydroxide, shake for 5 minutes, centrifuge, evaporate the supernatant to dryness, dissolve the residue in 1.5 mL of methanol, filter and use the filtrate.
2. Reference drug solution: Use 3.0 g of the reference drug as the same method described above.
3. Reference standard solution: Weigh accurately a quantity of arecoline hydrobromide and dissolve in methanol to produce a solution containing 5.0 mg per mL.
4. Procedure: Use silica gel F_{254} as the coating substance and a solution of acetone, water and glacial acetic acid (10:6:1) as the developing solvent. Apply 5 μL of each of the above solutions to the plate. Once the top of the solvent rise to about 5~10 cm from the origin, dry in air. Examine under the visible light. The spots in the chromatogram obtained from the sample solution correspond in R_f values and color to the spots in the chromatogram obtained from the reference drug solution and the reference standard solution.

Impurities and other requirements:
1. Loss on drying: Not more than 10.0% under heating at 105℃ for 5 hours (General rule 5008).
2. Total ash: Not more than 3.0% (General rule 5004).
3. Acid-insoluble ash: Not more than 1.0% (General rule 5004).

Assay:
1. Arecoline:
   (1) Mobile phase: A solution of acetonitrile and 0.2% phosphoric acid solution (2 in 1,000) (adjust pH value to 3.8 with concentrated ammonia solution) (55:45). The ratio varies as required.
   (2) Reference standard solution: Weigh accurately a quantity of arecoline hydrobromide and dissolve in mobile phase to produce a solution containing 0.1 mg per mL (the weight of arecoline is equivalent to 1/1.5214 of the weight of arecoline hydrobromide).

(3) Sample solution: Weigh accurately 0.5 g of the powdered sample, transfer to a conical flask with stopper, accurately add 25 mL of 50% methanol, seal, ultrasonicate for 30 minutes, cool, filter through a 0.45-µm filter, transfer the solution to 50-mL volumetric flask, add 25 mL of 50% methanol, ultrasonicate for 30 minutes, cool, filter through a 0.45-µm filter, add 50% methanol to volume.

(4) Chromatographic system: The liquid chromatography is equipped with an ultraviolet absorption photometer (wavelength: 210 nm) and a column packed with strong cation exchange gel (SCX-strong cation exchange resin). The number of theoretical plates of the peak of arecoline should not be less than 3,000.

(5) Procedure: Inject accurately 10 µL of each of the reference standard solution and the sample solution into the liquid chromatography apparatus, and calculate the content.

2. Water extractives: Carry out the method for determination of water extractives (General rule 5006).
3. Dilute ethanol extractives: Carry out the method for determination of dilute ethanol-soluble extractives (General rule 5006).

Storage: Store in a ventilated and dry place, and protect from insects.
Usage: Worm-expelling medicinal.
Dosage: 3~10 g.

ARISAEMATIS RHIZOMA
天南星
Tian Nan Sing / Tian Nan Xing
Jackinthepulpit Tuber

Jackinthepulpit tuber is the dried tuber of *Arisaema heterophyllum* Blume, *Arisaema erubescens* (Wall.) Schott or *Arisaema amurens*e Maxim. (Fam. Araceae).
It contains not less than 2.5% of dilute ethanol-soluble extractives and not less than 5.0% of water extractives.

Description:
1. Tuber of *Arisaema heterophyllum*: Slightly compressed-globose, 1.5~4.5 cm in diameter. Center with dented stem scars, encircled with 1~2 rows of sparse and coarse root scars, some surrounded by small lateral buds or has been grind.
2. Tuber of *Arisaema erubescens*: Oblate, 2~7 cm in diameter, externally pale yellow to pale brown, milky to pale yellow milky when peeled. Apex relatively flat, center with a round dented stem scars and brown bud scales, encircled with numerous pitted fibrous root scars. Bottom round and obtuse. Texture hard, fracture whitish, starchy. Odor, slight; taste, numb and pungent on chewing.
3. Tuber of *Arisaema amurens*e: Oblate, 1.5~4 cm in diameter, center with large and relatively flat stem scars, encircled with numerous irregular pitted fibrous root scars, some surrounded by small lateral buds.

Microscopic identification:
1. **Transverse section:**
   (1) Tuber of *Arisaema heterophyllum*: The outermost layer composed of brownish-yellow cork cells, some cork covered with brownish-black and indistinct cell form of dead layers. Cork composed of several layers of cells, flat-rectangular shaped, thin-walled, arranged dense and neat, with curved undulation. Cortex composed of parenchymatous cells, with raphides of calcium oxalate; parenchymatous cells of outer part of cortex, irregularly flat-rectangular, and the inner part of cortex irregularly round. Secretory cavities enclosed in circle in the center of cortex, containing secretory oil droplets. Vascular bundles scattered among parenchymatous cells of cortex. Xylem mainly composed of vessels and xylem parenchymatous cells; vessels mainly annular and spiral, 3~32 µm in diameter, lignified. Starch granules scattered in parenchymatous cells, mainly individual, 3~12 µm in diameter, mostly subrounded, hilum rare; commonly with compound granules composed of 2~12 components are usually visible.
   (2) Tuber of *Arisaema erubescens*: Cork composed of 6~20 layers of cork cells, cells tangentially elongated, arranged densely, cells containing brown mucilage contents scattered interruptedly near parenchyma; inner parenchymatous cells (some cells extruded) filled with starch granules, 20~92 µm in diameter. Secretory canals exist in parenchyma near cork with brown mucilage contents. Mucilage cells scattered in parenchymatous cells, or aggregated in group, subrounded or oblong, 60~280 µm in diameter, containing raphides of calcium oxalate, usually in bundles, 10~75 µm in length, distinct in length variations. Parenchymatous cells among vascular bundles contain brown granules aggregated in masses. Vascular bundles amphivasal, varying in direction or only few vessels. Vessels annular or spiral, 8~50 µm in diameter. Parenchymatous cells near vessels contain crystals of tiny-square calcium oxalate, polygonal or triangle.
   (3) Tuber of *Arisaema amurens*e: Cork composed of 6~15 layers of cells.

Parenchymatous cells near cortex contain less starch granules, between cells scattered with relative density of raphides of calcium oxalate contained mucilage cells. Parenchyma near vascular bundles usually scattered with mucilage cells containing brown granules.

2. **Powder:**
   (1) Tuber of *Arisaema heterophyllum*: Pale yellowish-white. Starch granules mostly compound; simple granules round, subtriangle or irregular, 2~20 μm in diameter, occasionally up to 22 μm; compound granules composed of 2~12 components, mostly composed of 2~4 or 5~7 components; hilum dotted, stellated, cleft-shaped or Y-shaped. More existence of raphides of calcium oxalate than Tiananxing, annular vessels and brown mucilage masses also present.
   (2) Tuber of *Arisaema erubescens*: Pale yellowish-white. The major portion of the powder is occupied by starch granules, mostly in individual with rare compound; simple granules subrounded or oblong, 2~20 μm in diameter; compound granules mostly composed of 2~3 components, uncommonly composed of 4~5 components, 15~25 μm in diameter; hilum asteroidal, dotted, cleft-shaped, V-shaped or cruciate, large granules with faint striations and scattered raphides of calcium oxalate. Annular and spiral vessels, brown mucilage contents, brown granules and prisms of calcium oxalate also present.
   (3) Tuber of *Arisaema amurense*: Pale yellowish-white. Starch granules mostly compound; simple granules spheroid, oblong or irregular, 2~28 μm in diameter; compound granules composed of 2~10 components, mostly composed of 2~4 components; hilum dotted, stellated or cleft-shaped. Raphides of calcium oxalate relatively numerous, annular vessels and brown granules also present.

Thin layer chromatographic identification test (General rule 1010.3):

1. Sample solution: Take 3.0 g of powdered sample to a beaker, add 10 mL of ethanol, ultrasonicate for 30 minutes, filter and make up to 10 mL.
2. Reference drug solution: Use 3.0 g of the reference drug as the same method described above.
3. Procedure: Use silica gel F_{254} as the coating substance and a solution of *n*-butanol, water and glacial acetic acid (7:2:1) as the developing solvent. Apply 5 μL of each of the above solutions to the plate. Once the top of the solvent rise to about 5~10 cm from the origin, dry in air. Spray with a solution of *p*-anisaldehyde in sulfuric acid (*p*-Anisaldehyde/H_2SO_4 TS) and heat at 105℃. Examine under visible light. The spots in the chromatogram obtained from the sample solution correspond in R_f values and color to the spots in the chromatogram obtained from the reference drug solution.

Impurities and other requirements:

1. Loss on drying: Not more than 15.0% under heating at 105℃ for 5 hours (General rule 5008).
2. Total ash: Not more than 4.0% (General rule 5004).
3. Acid-insoluble ash: Not more than 0.5% (General rule 5004).

Assay:

1. Water extractives: Carry out the method for determination of water extractives (General rule 5006).
2. Dilute ethanol extractives: Carry out the method for determination of dilute ethanol-soluble extractives (General rule 5006).

Storage: Refrigerate or store in a cool and dry place, and protect from mold and insects.
Usage: Phlegm-dispelling medicinal (Cold-phlegm warming and resolving medicinal).
Dosage: 3~10 g, generally processed before application.
Precaution and warning: Unprocessed one toxic, used with caution in pregnancy.

ARMENIACAE AMARUM SEMEN
苦杏仁
Ku Sing Ren / Ku Xing Ren
Bitter Apricot Seed

Bitter apricot seed is the dried ripe seed of *Prunus armeniaca* L. var. *ansu* Maxim., *Prunus sibirica* L., *Prunus mandshurica* (Maxim.) Koehne or *Prunus armeniaca* L. (Fam. Rosaceae).
It contains not less than 7.0% of water extractives and not less than 3.0% of amygdalin.

Description: Different species with similar appearance. Flattened-cordate, 10~19 mm in length, 7~15 mm in width, 5~7 mm thick. Apex slightly acute, base obtuse, unsymmetrical. Testa thin, brown to dark brown, with irregular wrinkles, nearly apex with a short-liner hilum, base with elliptical chalaza, raphe dark color, slightly furrowed, connecting with hilum and chalaza, with numerous dark brown veins. Testa peeled by using warm water, showing cotyledons 2, white, oily, with smaller radicle and embryo at the apex. Odorless; taste, bitter.

Microscopic identification:

1. **Transverse section:** Epidermis of testa composed of 1 layer of thin cells, scattered with subrounded orange-yellow stone cells, inside showing several layers of parenchymatous cell, scattered with fine vascular bundles. Perisperm composed of 1 layer

of fallen parenchymatous cells. Endosperm composed of 1 to several layers of square cells, containing aleurone grains and fatty oil. Cotyledon composed of polygonal parenchymatous cells, containing aleurone grains and fatty oil.

2. **Powder:** Yellowish-white. Stone cells of testa singly scattered or in a group, mostly conchoidal in lateral view; subrounded or subpolygonal in surface view. Parenchymatous cells of outer epidermis of testa yellowish-brown, mostly shrunken and connected with stone cells, with indistinct cell boundaries. Cotyledon cells contain aleurone grains and oil droplets, fine clusters of calcium oxalate also visible. Endosperm cells subpolygonal, containing aleurone grains.

Thin layer chromatographic identification test (General rule 1010.3):

1. Sample solution: Add 1.0 g of powdered sample to 10 mL of methanol, ultrasonicate for 30 minutes, filter and use the filtrate.
2. Reference drug solution: Use 1.0 g of the reference drug as the same method described above.
3. Reference standard solution: Weigh accurately a quantity of amygdalin and dissolve in methanol to produce a solution containing 2.0 mg per mL.
4. Procedure: Use silica gel F_{254} as the coating substance and a solution of ethyl acetate, methanol and water (7:3:1) as the developing solvent. Apply 10 μL of each of the above solutions to the plate. Once the top of the solvent rise to about 5~10 cm from the origin, dry in air. Spray with a 10% solution of sulfuric acid in ethanol (H_2SO_4/EtOH TS), heat at 105℃ until the spots become visible, examine under the visible light. The spots in the chromatogram obtained from the sample solution correspond in R_f values and color to the spots in the chromatogram obtained from the reference drug solution and the reference standard solution.

Impurities and other requirements:

1. Loss on drying: Not more than 10.0% under heating at 105℃ for 5 hours (General rule 5008).
2. Total ash: Not more than 5.0% (General rule 5004).
3. Acid-insoluble ash: Not more than 2.0% (General rule 5004).

Assay:

1. Amygdalin:
   (1) Mobile phase: A solution of acetonitrile and 0.1% phosphoric acid (8:92). The ratio varies as required.
   (2) Reference standard solution: Weigh accurately a quantity of amygdalin and dissolve in methanol to produce a solution containing 40 μg per mL.
   (3) Sample solution: Weigh accurately 0.25 g of powdered sample, transfer to a conical flask with stopper, add accurately 25 mL of methanol, stopper tightly and weigh, ultrasonicate for 30 minutes, cool, weigh again, replenish the loss of the weight with methanol, mix well and filter. Take 5 mL of the successive filtrate in a 50-mL volumetric flask, add 50% methanol to volume, mix well, filter and use the successive filtrate.
   (4) Chromatographic system: The liquid chromatography is equipped with an ultraviolet absorption photometer (wavelength: 207 nm) and a column packed with octadecylsilanized silica gel. The number of theoretical plates of the peak of amygdalin should not be less than 7,000.
   (5) Procedure: Inject accurately 10~20 μL of each of the reference standard solution and the sample solution into the liquid chromatography apparatus, and calculate the content.
2. Water extractives: Carry out the method for determination of water extractives (General rule 5006).

Storage: Refrigerate or store in a cool and dry place, and protect from insects.
Usage: Phlegm-dispelling medicinal (Cough-suppressing and panting-calming medicinal).
Dosage: 3~10 g, decocted with water.
Precaution and warning: Unprocessed one toxic, ingestion of 60 unprocessed almonds may result in hydrocyanism or even death.

ARNEBIAE RADIX
紫草
Zih Cao / Zi Cao
Arnebia Root

Arnebia root is the dried root of *Arnebia euchroma* (Royle) Johnst. or *Arnebia guttata* Bunge (Fam. Boraginaceae).
It contains not less than 2.0% of dilute ethanol-soluble extractives and not less than 3.0% of water extractives.

Description:

1. Root of *Arnebia euchroma* (Soft Arnebia Root): Conical or cylindrical, twisted, 6~15 cm in length, 1~2 cm in diameter. Externally purplish-red or purplish-black, with longitudinal wrinkles. Bark easily exfoliated and exposed yellowish-white wood. Apex bearing with scars or base of stem. Texture lax and soft, easily broken, fracture purple, with several layers overlapped, scattered with yellowish-white dots of vessels and fibers. Odor, slightly stinking; taste, slightly bitter and astringent.
2. Root of *Arnebia guttata*: Conical or cylindrical, twisted, 4~12 cm in length, 0.5~2.5 cm in diameter. Externally purplish-brown, starchy, with irregular longitudinal wrinkles. Bark thin and easily

exfoliated. Root stock swollen, bearing with remained stem, strigose and white glandular-punctate. Texture hard and fragile, easily broken, fracture uneven, bark purplish-red; wood yellowish-white, vascular bundle arranged radially. Odor, aromatic; taste, slightly sweet and astringent.

Microscopic identification:

1. **Transverse section:**
   (1) Root of *Arnebia euchroma*: Cork several layered, tissue in the center mostly broken. Phloem narrow, xylem arranged radially, vessels 2~4 rows. Cork cells and parenchymatous cells contain purple pigments, cells became red in color after treatment with a solution of chloral hydrate.
   (2) Root of *Arnebia guttata*: Cork composed of 2~10 rows of cork cells. Cortex narrow, parenchymatous cells small. Stele irregular in shape. Xylem broad, usually with xylem fiber groups in the center, vessels singly scattered or in bundles, rays narrow.
2. **Powder:**
   (1) Root of *Arnebia euchroma*: Purplish-red. Cork cells polygonal or subsquare, filled with purplish-red pigments, strip-shaped or lumpy. Cells became yellowish-brown in color after treatment with a solution of chloral hydrate. Reticulate, bordered-pitted and spiral vessels visible, 7~100 μm in diameter. Non-glandular hairs unicellular, 10~50 μm in diameter, usually with longitudinal striations, purplish-red contents occasionally visible.
   (2) Root of *Arnebia guttata*: Purplish-red. Cork cells polygonal or square, containing purplish-red granular pigments. Parenchymatous cells square or fusiform. Fibers singly scattered or in bundles, long-fusiform, yellowish-green, 10~20 μm in diameter. Reticulate, bordered-pitted and spiral vessels visible. Non-glandular hairs unicellular, 10~30 μm in diameter, wall thick, mostly broken.

Thin layer chromatographic identification test (General rule 1010.3):

1. Sample solution: Add 0.5 g of powdered sample to 20 mL of petroleum ether (30~60℃), ultrasonicate for 20 minutes, filter and evaporate the filtrate to 1 mL.
2. Reference drug solution: Use 0.5 g of the reference drug as the same method described above.
3. Procedure: Use silica gel F_{254} as the coating substance and a solution of *n*-hexane, toluene, ethyl acetate and formic acid (5:5:0.5:0.1) as the developing solvent. Apply 5 μL of each of the above solutions to the plate. Once the top of the solvent rise to about 5~10 cm from the origin, dry in air. Heat at 105℃ for 2 minutes, examine under the visible light, and the purplish-red spots in the chromatogram obtained from the sample solution corresponds in R_f values and color to the spots in the chromatogram obtained from the reference drug solution; spray with a 10% solution of potassium hydroxide in methanol, and show blue spots.

Impurities and other requirements:

1. Total ash: Not more than 16.0% (General rule 5004).
2. Acid-insoluble ash: Not more than 7.0% (General rule 5004).

Assay:

1. Water extractives: Carry out the method for determination of water extractives (General rule 5006).
2. Dilute ethanol extractives: Carry out the method for determination of dilute ethanol-soluble extractives (General rule 5006).

Storage: Store in a cool and dry place, and protect from moisture.
Usage: Heat-clearing and blood-cooling medicinal.
Dosage: 5~9 g.

ARTEMISIAE ANNUAE HERBA
青蒿
Cing Hao / Qing Hao
Sweet Wormwood Herb

Sweet wormwood herb is the dried aeiral part of *Artemisia annua* L. (Fam. Compositae).
It contains not less than 6.0% of dilute ethanol-soluble extractives and not less than 6.0% of water extractives.

Description: Stems cylindrical, frequently branched at the upper part, 30~80 cm in length, 0.2~0.6 cm in diameter. Externally yellowish-green or brownish-yellow, with longitudinal ridges. Texture slightly hard, fracture yellowish-white, with pith in the center, white. Leaves alternate, dark green or brownish-green, mostly crumpled or broken, 3-pinnatiparted as whole, the segments and smaller segments short round or oblong, both surfaces pubescent. Odor, characteristically aromatic; taste, slightly bitter, with a cooling sensation.

Microscopic identification:

1. **Transverse section:**
   (1) Stem: Subrounded, with approximately 10 subrounded-acute ridges. Epidermal cells rectangular in shape, 1~2 layers, covered with cuticle. Ridge area with irregular or subrounded collenchymatous cells up to 12 layers. Cortex narrow, composed of 2~3 layers of subrounded to oblong parenchymatous cells. Approximately 13~20 collateral vascular bundles; phloem

relatively narrow, with lignified phloem fibers on the outer layer; cambium 1~2 layers; xylem relatively broad. Pith large, comprising about 2/3 of the stem.

2. **Powder:** Yellowish-green to yellowish-brown. Bract cells rectangular in shape, cell wall slightly sinuous. Anther cells largely dismembered, polygonal, cell wall thick, colorless. Fibrous layer of anther cells villiform on one side, slightly sinuous on the other. Vessel elements mainly spiral, 3~17 μm in diameter, or bordered-pitted, 8~50 μm in diameter. Style epidermal cells short, villiform, pale brown to reddish-brown, mostly dismembered. Clusters of calcium oxalate small, 2~7 μm in diameter; polychromatic under the polarized microscope. Pollen grains numerous, subglobose to ellipsoid in shape, 14~21 μm in diameter, with 3 apertures. Glandular hair with multiple cell stalk. Stomata of anomocytic type, 15~27 μm in length and 13~21 μm in width. Fibers bundled or scattered, 6~20 μm in diameter, thick-walled, cell cavity narrow; polychromatic under the polarized microscope.

Thin layer chromatographic identification test (General rule 1010.3):

1. Sample solution: Add 1.0 g of powdered sample to 10 mL of methanol, heat under reflux for 30 minutes, cool then filter and make up the filtrate to the 10 mL.
2. Reference drug solution: Use 1.0 g of the reference drug as the same method described above.
3. Procedure: Use silica gel F_{254} as the coating substance and a solution of ethyl acetate, methanol and water (10:2:1) as the developing solvent. Apply 5 μL of each of the above solutions to the plate. Once the top of the solvent rise to about 5~10 cm from the origin, dry in air. Examine under the ultraviolet light at 365 nm. The spots in the chromatogram obtained from the sample solution correspond in R_f values and color to the spots in the chromatogram obtained from the reference drug solution.

Impurities and other requirements:

1. Loss on drying: Not more than 15.0% under heating at 105℃ for 5 hours (General rule 5008).
2. Total ash: Not more than 10.0% (General rule 5004).
3. Acid-insoluble ash: Not more than 3.0% (General rule 5004).

Assay:

1. Water extractives: Carry out the method for determination of water extractives (General rule 5006).
2. Dilute ethanol extractives: Carry out the method for determination of dilute ethanol-soluble extractives (General rule 5006).

Storage: Store in a ventilated and dry place.
Usage: Heat-clearing medicinal (Deficiency heat-clearing medicinal).
Dosage: 6~12 g, not decocted for a long time.
Precaution and warning: It should be decocted later and not for a long time.

ARTEMISIAE ARGYI FOLIUM
艾葉
Ai Ye / Ai Ye
Argy Wormwood Leaf

Argy wormwood leaf is the dried leaf of *Artemisia argyi* Levl. et Vant. (Fam. Compositae).
It contains not less than 15.0% of dilute ethanol-soluble extractives and not less than 14.0% of water extractives.

Description: Crumpled or broken, with short petiole, ovate-ellipsoidal as whole, pinnatiparted, segments ellipsoidal-lanceolate, margin irregularly dentate; upper surface grayish-green or dark yellowish-green, sparsely pubescent and glandular-punctate, lower surface densely grayish-white tomenta. Texture soft. Odor, delicately aromatic; taste, bitter.

Microscopic identification:

1. **Transverse section:** Epidermis composed of 1 layer of cells, covered with cuticles. Non-glandular hairs and glandular hairs present on the upper and lower surface of epidermis, non-glandular hairs especially abundant on the lower epidermis. Non-glandular hairs 2 types: T-shaped and uniseriate, both often broken. Palisade tissue and spongy tissue each comprises half of the mesophyll, some cells containing clusters of calcium oxalate; palisade tissue composed of 1~2 layers of rectangular cells, arranged radially. Midvein 1 distinctly protruded, collenchyma tissue existed in the inner side of both upper and lower epidermis. Vascular bundles collateral, with sclerenchymatous cells on the upper and lower parts of the vascular bundle; phloem cells relatively small, varing in shape; xylem subrounded or oblong, 3~7 arranged in line, lignified to extremely lignified. Parenchymatous cells usually contain pale yellow or light yellow contents.
2. **Powder:** Greenish-brown. Non-glandular hairs in 2 types, first type T-shaped, with elongated and bent apical cell and 2~4 celled stalk, unequal arms 2; second type uniseriate, 3~5 celled, with very long and twisted apical cell, frequently broken. Glandular hairs composed of 4~6 oppositely overlapped cells, without stalk, paramecium-like in surface view. Clusters of calcium oxalate 3~7 μm in diameter, existing in mesophyll.

Thin layer chromatographic identification test (General rule 1010.3):

1. Sample solution: Add 1.0 g of powdered sample to 25 mL of petroleum ether (30~60℃), heat under reflux for 30 minutes, filter, evaporate the filtrate to dryness, dissolve the residue in 1 mL of *n*-hexane.
2. Reference drug solution: Use 1.0 g of the reference drug as the same method described above.
3. Procedure: Use silica gel F_{254} as the coating substance and a solution of petroleum ether (30~60 ℃), toluene and acetone (10:8:0.5) as the developing solvent. Apply 2~5 μL of each of the above solutions to the plate. Once the top of the solvent rise to about 5~10 cm from the origin, dry in air. Spray with a 1% solution of vanillin in sulfuric acid (Vanillin/H_2SO_4 TS), heat at 105℃ until the spots become visible. The spots in the chromatogram obtained from the sample solution correspond in R_f values and color to the spots in the chromatogram obtained from the reference drug solution.

Impurities and other requirements:

1. Loss on drying: Not more than 12.0% under heating at 105℃ for 5 hours (General rule 5008).
2. Total ash: Not more than 12.0% (General rule 5004).
3. Acid-insoluble ash: Not more than 4.0% (General rule 5004).

Assay:

1. Water extractives: Carry out the method for determination of water extractives (General rule 5006).
2. Dilute ethanol extractives: Carry out the method for determination of dilute ethanol-soluble extractives (General rule 5006).

Storage: Store in a ventilated and dry place, and protect from moisture.
Usage: Blood-regulating medicinal (Hemostatic medicinal).
Dosage: 3~10 g.

ARTEMISIAE SCOPARIAE HERBA
茵陳
Yin Chen / Yin Chen
Oriental Wormwood Herb

Oriental wormwood herb is the dried aerial part of *Artemisia scoparia* Waldst. et Kit. or *Artemisia capillaris* Thunb. (Fam. Compositae). The drug collected in spring is commonly known as "Mian Yin Chen" and that collected in autumn with flower buds is commonly known as "Yin Chen Hau".
It contains not less than 7.0% of dilute ethanol-soluble extractives and not less than 8.0% of water extractives.

Description:

1. Mian Yin Chen: Mostly crumpled into masses, grayish-white or grayish-green, densely covered with white pubescences throughout, soft like nap. Stems thin and small, generally 1.5~2.5 cm in length, 1.5~3 mm in diameter, the upper or lower part with petioled leaves. Leaves soft, crumpled and curved, lamina 0.5~2 cm in length, 2~3 pinnatiparted, lobes liner-shaped, entire. Texture fragile, easily broken. Odor, slightly aromatic; taste, slightly bitter.
2. Yin Chen Hau: Stem cylindrical, frequently branched, 30~100 cm in length, 2~8 mm in diameter. Externally pale purple or purple, striated longitudinally, pubescent; texture light in weight and fragile, fracture whitish. Leaves densely gathered, or mostly fallen off. Basal leaves 2~3 pinnatiparted, lobes stripe-shaped or finely stripe-shaped, densely covered with white pubescences on both surfaces; cauline leaves 1~2 pinnatiparted, amplexicaul at the base, lobes filamentous. Heads ovate, mostly gathered in conical, 1.2~1.5 mm in length, 1~1.2 mm in diameter, short petioled; involucres 3~4 layers, ovate, phyllaries 3-lobed; the outer pistillate flowers 6~10, up to 15, the inner bisexual flowers 2~10. Achenes oblong, yellowish-brown. Odor, aromatic; taste, slightly bitter.

Microscopic identification:

1. **Powder:**
   (1) Leaf of Yin Chen Hau: Grayish-green. Walls of upper epidermal cells relatively straight, walls of lower epidermal cells undulately curved; both the upper and lower epidermis with anomocytic stomata. Leaf lobes obtuse or slightly narrow at the apex, epidermal cells relatively small, stomata rare. Glandular hairs rare, the apex sole-shaped, composed of 6~8 pairly overlapped cells, 5~26 μm in diameter, with unequal arms, wall thick and lignified, the base 1~3 cells, extremely flat and short. T-shaped non-glandular hairs abundant, mostly broken in fiber-shaped, intact ones with extremely long apex cells, up to 2 mm in length, 5~6 μm in diameter.

Thin layer chromatographic identification test (General rule 1010.3):

1. Sample solution: Add 0.5 g of powdered sample to 10 mL of methanol, shake for 3 minutes, stand, filter and use the filtrate.
2. Reference drug solution: Use 0.5 g of the reference drug as the same method described above.
3. Procedure: Use silica gel F_{254} as the coating substance and a solution of acetone and *n*-hexane (1:1) as the developing solvent. Apply appropriate amount of each of the above solutions to the plate. Once the top of the solvent rise to about 5~10 cm from the origin, dry in air. Examine under the

ultraviolet light at 365 nm. The spots in the chromatogram obtained from the sample solution correspond in R_f values and color to the spots in the chromatogram obtained from the reference drug solution.

Impurities and other requirements:

1. Loss on drying: Not more than 13.0% under heating at 105℃ for 5 hours (General rule 5008).
2. Total ash: Not more than 30.0% (General rule 5004).
3. Acid-insoluble ash: Not more than 15.0% (General rule 5004).

Assay:

1. Water extractives: Carry out the method for determination of water extractives (General rule 5006).
2. Dilute ethanol extractives: Carry out the method for determination of dilute ethanol-soluble extractives (General rule 5006).

Storage: Store in a ventilated and dry place, and protect from mold and insects.
Usage: Dampness-draining diuretic medicinal.
Dosage: 6~30 g.

ASARI RADIX ET RHIZOMA
細辛
Si Sin / Xi Xin
Asarum Root and Rhizome

Asarum root and rhizome is the dried root and rhizome of *Asarum heterotropoides* Fr. Schmidt var. *mandshuricum* Kitag., *Asarum sieboldii* Miq. or *Asarum sieboldii* Miq. var. *seoulense* Nakai (Fam. Aristolochiaceae).
It contains not less than 8.0% of dilute ethanol-soluble extractives, not less than 8.0% of water extractives, not less than 1.0% of volatile oil and should not contain aristolochic acid.

Description:

1. Root and rhizome of *Asarum heterotropoides* var. *mandshuricum*: Usually rolled a mass. Rhizomes irregular cylindrical, short-branched, 1~10 cm in length, 2~4 mm in diameter; externally grayish-yellow, with ringed nodes, internodes 2~3 mm in length, with dish-like stem scars at the top of branches. Roots densely occurring at nodes, 5~20 cm in length, up to 1 mm in diameter; externally brownish-yellow, smooth or longitudinally wrinkled, with fibrous roots or root scars at the lower part. Odor, pungent and aromatic; taste, pungent with tongue-numbing feeling.
2. Rhizome of *Asarum sieboldii*: Rhizomes 5~20 cm in length, 1~2 mm in diameter, internodes 0.2~1 cm in length. Odor and taste relatively weak.
3. Rhizome of *Asarum sieboldii* var. *seoulense*: Rhizomes 1~5 mm in diameter, internodes 0.1~1 cm in length.

Microscopic identification:

1. **Transverse section:**
   (1) Root*:* Epidermis composed of 1 layer of cells, partially remained. Cortex broad, scattering numerous oil cells; exodermis composed of 1 layer of cells, cells subrectangular, walls suberized and slightly lignified; endodermis obvious, Casparian dots visible. Pericycle composed of 1~2 layers of cells. Primary xylem diarch to tetrarch. Phloem bundles each with 1~3 larger parenchymatous cells in the center but whose long diameter much shorter than that of the largest vessel; alternately, no large cells in phloem bundles. Parenchymatous cells containing starch granules.
2. **Powder:** Pale yellow. Epidermal cells of root subrectangular or subrectangular-polygonal, wall thin and undulating. Epidermal cells of root in longitudinal view, pale yellow secretory cells occasionally visible in tissue, cells subrectangular, subsquare or subpolygonal. Parenchymatous cells of cortex in longitudinal view with distinct intercellular spaces, sandy crystals of calcium oxalate visible, filled with abundant starch granules. Vessels 20~100 μm in diameter, mainly reticulate, spiral, scalariform or annular, bordered-pitted vessels occasionally visible. Starch granules extremely numerous, simple granules subrounded, 2~14 μm in diameter, hilum dotted, V-shaped, cleft-shaped or Y-shaped, striations indistinct; compound granules varying in size, composed of 2~6 components. Stone cells rare in rhizome tissue, subrectangular, subsquare or elongated-polygonal, 18~50 μm in diameter.

Thin layer chromatographic identification test (General rule 1010.3):

1. Sample solution: Add 1.0 g of powdered sample to 10 mL of ethanol, shake for 5 minutes, stand, filter and use the filtrate.
2. Reference drug solution: Use 1.0 g of the reference drug as the same method described above.
3. Reference standard solution: Weigh accurately 10 mg of methyleugenol and dissolve in 10 mL of ethanol to produce a solution containing 1 mg per mL.
4. Procedure: Use silica gel F_{254} as the coating substance and a solution of *n*-hexane, toluene and acetone (3:2:1) as the developing solvent. Apply 5 μL of each of the above solutions to the plate. Once the top of the solvent rise to about 5~10 cm from the origin, dry in air. Spray with a solution of *p*-anisaldehyde in sulfuric acid (*p*-Anisaldehyde/H_2SO_4 TS) and heat at 105℃ for 2 minutes. Examine under the visible light. The

purplish-brown spots in the chromatogram obtained with the sample solution corresponds in R_f values and color to the spots in the chromatogram obtained with the reference drug solution and the reference standard solution.

Impurities and other requirements:

1. Total ash: Not more than 14.0% (General rule 5004).
2. Acid-insoluble ash: Not more than 7.0% (General rule 5004).
3. Arsenic (As): Not more than 5.0 ppm (General rule 3006, 3049, 3050).
4. Pesticide residues:
   (1) The total DDT content: Not more than 0.2 ppm (General rule 3052).
   (2) The total BHC content: Not more than 0.2 ppm (General rule 3052).
5. Should not contain aristolochic acid:
   (1) Mobile phase: Weigh accurately 7.8 g of sodium dihydrogen phosphate solution, add 2 mL of phosphoric acid and make up to 1,000 mL (0.05 mol/L). A solution of 0.05 mol/L sodium dihydrogen phosphate solution and acetonitrile (11:9). The ratio varies as required.
   (2) Reference standard solution: Weigh accurately X mg of aristolochic acid (It is equivalent to 10 mg of aristolochic acid I, X=10×100/F, F refers to content of aristolochic acid I, which is marked on standard vial) and dissolve in 75% methanol to 200 mL. Measure accurately 2 mL of the mixture and add 75% methanol to produce a 200 mL solution.
   (3) Sample solution: Weigh accurately 2.0 g of the powdered sample, transfer to a round bottom flask, add 50 mL of a solution of 75% methanol in water, ultrasonicate for 20 minutes, filter and use the filtrate.
   (4) Chromatographic system: The liquid chromatography is equipped with an ultraviolet absorption photometer (wavelength: 400 nm) and a column (4.6 mm × 25 cm) packed with octadecylsilanized silica gel (5 μm in particle diameter). The column temperature is maintained at 25~40 ℃. The flow rate is about 1.0 mL/min.
   (5) Procedure: Inject accurately 10 μL of each of the reference standard solution and the sample solution into the liquid chromatography apparatus, and record the chromatogram. If the chromatogram obtained with the sample solution didn't correspond in the retention time of aristolochic acid I to the chromatogram obtained with the reference standard solution, the sample is acceptable. If the chromatogram obtained with the sample solution corresponds in the retention time of aristolochic acid I to the chromatogram obtained with the reference standard solution, the sample should be retested under different conditions; when the chromatogram obtained with the sample solution didn't correspond in the retention time of aristolochic acid I to the chromatogram obtained with the reference standard solution, the sample should be acceptable.

Assay:

1. Water extractives: Carry out the method for determination of water extractives (General rule 5006).
2. Dilute ethanol extractives: Carry out the method for determination of dilute ethanol-soluble extractives (General rule 5006).
3. Volatile oil: Carry out the method for determination of volatile oil (General rule 5007).

Storage: Store in a ventilated and dry place, and protect from moisture.
Usage: Exterior-releasing medicinal (Wind-cold dispersing medicinal).
Dosage: 1~3 g.
Precaution and warning: Avoid overdosing when applied alone.

ASPARAGI RADIX
天門冬
Tian Men Dong / Tian Men Dong
Asparagus Root Tuber

Asparagus root tuber is the dried root tuber of *Asparagus cochinchinensis* (Lour.) Merr. (Fam. Liliaceae), commonly known as "Tian Dong".
It contains not less than 50.0% of dilute ethanol-soluble extractives and not less than 50.0% of water extractives.

Description: Long fusiform, 5~23 cm in length, 0.5~2.2 cm in diameter. Externally yellowish-white or pale yellowish-brown, translucent, smooth, with deep and shallow wrinkles, some with patches of the grayish-brown bark. Texture hard, fracture even, horny, stele yellowish-white in the center, softened when moistened, with elasticity. Odor, slight; taste, slightly sweet and sticky.

Microscopic identification:

1. **Transverse section:** Occasionally with remains of velamen. Cortex broad, with stone cells arranged in an interrupted ring on the outer part, 2~4 layers thick. Stone cells subrounded, subpolygonal or square, walls vary in thickness, with fine and dense pits and distinct pit canals. Casparian strip of endodermis distinct. Pericycle consists of 1~2 layers of parenchymatous cells; xylem strands and phloem strand content 35~100 of each, respectively, arranged alternately, a few vessels developing

towards the large pith. Parenchymatous cells scattered with mucilage cells, containing raphides of calcium oxalate, mostly distributed near the stone cell ring, arranged almost in a ring near endoderm, but rare in pith.

2. **Powder:** Grayish-yellow. Stone cells rectangular, strip-shape, subrounded or long-fusiform, 85~600 μm long, 30~90 μm in diameter, the wall 5~37 μm thick; pits and pit canals indistinct; pits fine and dense, pit canals fine and short, occasionally with extremely thick walls. Raphides of calcium oxalate scattered or existed in mucilage cells, 40~100 μm long. Bordered-pitted and scalariform bordered-pitted vessels up to 110 μm in diameter. Xylem parenchymatous cells, fiber tracheids and endodermis cells also present.

Identification:

1. Check α-amino carboxylic acid: Take a quantity of powdered sample in a micropipette, add drops of saturated sodium hypochlorite solution, and heat slowly, add drops of fuchsin-sulfurous acid TS (add SO_2 to 1% fuchsin solution until the color fades), if a red color is produced and indicates the presence of asparagine.

Impurities and other requirements:

1. Total ash: Not more than 4.0% (General rule 5004).
2. Acid-insoluble ash: Not more than 1.0% (General rule 5004).
3. Total heavy metals: Not more than 10.0 ppm (General rule 3005).
4. Arsenic (As): Not more than 5.0 ppm (General rule 3006, 3049, 3050).

Assay:

1. Water extractives: Carry out the method for determination of water extractives (General rule 5006).
2. Dilute ethanol extractives: Carry out the method for determination of dilute ethanol-soluble extractives (General rule 5006).

Storage: Refrigerate or store in a cool and dry place, and protect from mold and insects.
Usage: Tonifying and replenishing medicinal (Yin-tonifying medicinal).
Dosage: 6~12 g.

ASTERIS RADIX ET RHIZOMA
紫菀
Zih Wan / Zi Wan
Tatarian Aster Root and Rhizome

Tatarian aster root and rhizome is the dried root and rhizome of *Aster tataricus* L. f. (Fam. Compositae).
It contains not less than 38.0% of dilute ethanol-soluble extractives and not less than 40.0% of water extractives.

Description: Rhizomes in irregular masses, varying in size; externally grayish-brown; root stock small, apex with remains of stems and leaves, fibrous; texture hard. Numerous rootlet fasciculated on rhizomes, 3~15 cm in length, frequently braided; externally purplish-red or grayish-red, with longitudinal wrinkles; texture flexible. Odor, slightly aromatic; taste, sweet and slightly bitter.

Microscopic identification:

1. **Transverse section:**
   (1) Root: Epidermal cells frequently withered or occasionally fallen off, containing purplish-red pigments. Hypodermal cells flat, slightly elongated tangentially, some cells containing purplish-red pigments, wall thin. Cortex broad, composed of parenchymatous cells, cells subrounded, intercellular spaces distinct, with 4~6 secretory canals. Endodermis distinct. Stele small, xylem slightly polygonal, vascular bundles arranged radially, rays distinct, pith large. Parenchymatous cells contain inulin.
2. **Powder:** Yellowish-brown. Cork cells rectangular, occasionally polygonal or subsquare. Sclerenchymatous cells rectangular or oblong, wall slightly thickened. Hypodermal cells subrectangular, containing purplish-red pigments. Vessels mainly pitted and scalariform, about 12~55 μm in diameter. Fibers acute at both ends, 10~36 μm in diameter, wall thin, with obliquely pits, slightly lignified. Parenchymatous cells contain inulin and clusters of calcium oxalate; inulin fan-shaped.

Thin layer chromatographic identification test (General rule 1010.3):

1. Sample solution: Add 2.0 g of powdered sample to 20 mL of methanol, heat under reflux for 30 minutes, filter and evaporate the filtrate to 10 mL.
2. Reference drug solution: Use 2.0 g of the reference drug as the same method described above.
3. Procedure: Use silica gel F_{254} as the coating substance and a solution of *n*-hexane and ethyl acetate (5:2) as the developing solvent. Apply 5 μL of each of the above solutions to the plate. Once the top of the solvent rise to about 5~10 cm from the origin, dry in air. Spray with a solution of *p*-anisaldehyde in sulfuric acid (*p*-Anisaldehyde/ H_2SO_4 TS) and heat at 105℃ until the spots become visible. Examine under the visible light. The spots in the chromatogram obtained from the sample solution correspond in R_f values and color to the spots in the chromatogram obtained from the reference drug solution.

Impurities and other requirements:

1. Total ash: Not more than 12.0% (General rule 5004).
2. Acid-insoluble ash: Not more than 7.0% (General rule 5004).

Assay:
1. Water extractives: Carry out the method for determination of water extractives (General rule 5006).
2. Dilute ethanol extractives: Carry out the method for determination of dilute ethanol-soluble extractives (General rule 5006).

Storage: Refrigerate or store in a cool and dry place, and protect from mold and insects.
Usage: Phlegm-dispelling, cough-suppressing and panting-calming medicinal.
Dosage: 5~9 g.

ASTRAGALI COMPLANATI SEMEN
沙苑蒺藜
Sha Yuan Ji Li / Sha Yuan Ji Li
Flastem Milkvetch Seed

Flastem milkvetch seed is the dried ripe seed of *Astragalus complanatus* R. Br. (Fam. Leguminosae). It is commonly "Sha Yuan Zi".
It contains not less than 10.0% of dilute ethanol-soluble extractives and not less than 14.0% of water extractives.

Description: Reniform, slightly flattened, about 2 mm in length, about 1.5 mm in width. Externally grayish-brown or greenish-brown, smooth, with a pale color hilum located on one slightly dented edge. Texture hard. 2 cotyledons, pale yellow, radicle curved. Odor, slight; taste, weak and beany flavored on chewing.

Microscopic identification:
1. **Transverse section:** Epidermal palisade cells of testa composed of 1 layer of cells, and 2 layers of cells in hilum region, 35~55 μm in radial length, about 7 μm in tangential length, lateral walls gradually thickened outward, outer walls thickened with longitudinal striations; a light line bearing at 1/5~1/8 part close to surface, covered with cuticle, about 1.5 μm thick. 1 layer brace cells short dumbbell-shaped, 20~25 μm in radial length, 15~25 μm in tangential length of the upper part, 25~45 μm in tangential length of the lower part, containing longitudinal and thick striations. Nutritive layer composed of several layers of parenchymatous cells, mostly shrunken, cell boundary indistinct. Cotyledon cells contain fatty oil.

Thin layer chromatographic identification test (General rule 1010.3):
1. Sample solution: Add 0.2 g of powdered sample to 10 mL of methanol, ultrasonicate for 30 minutes, cool, filter and evaporate the filtrate to dryness, dissolve the residue in 2 mL of methanol.
2. Reference drug solution: Use 0.2 g of the reference drug as the same method described above.
3. Reference standard solution: Weigh accurately a quantity of complanatoside A and dissolve in 60% methanol to produce a solution containing 0.05 mg per mL.
4. Procedure: Use silica gel F_{254} as the coating substance and a solution of ethanol, butanone, acetylacetone and water (3:3:1:13) as the developing solvent. Apply appropriate amount of each of the above solutions to the plate. Once the top of the solvent rise to about 5~10 cm from the origin, dry in air. Spray with a solution of aluminum chloride in ethanol ($AlC1_3$/EtOH TS), examine under the ultraviolet light at 365 nm. The spots in the chromatogram obtained from the sample solution correspond in R_f values and color to the spots in the chromatogram obtained from the reference drug solution and the reference standard solution.

Impurities and other requirements:
1. Loss on drying: Not more than 12.0% under heating at 105℃ for 5 hours (General rule 5008).
2. Total ash: Not more than 5.0% (General rule 5004).
3. Acid-insoluble ash: Not more than 1.0% (General rule 5004).

Assay:
1. Water extractives: Carry out the method for determination of water extractives (General rule 5006).
2. Dilute ethanol extractives: Carry out the method for determination of dilute ethanol-soluble extractives (General rule 5006).

Storage: Refrigerate or store in a cool and dry place.
Usage: Tonifying and replenishing medicinal (Yang-assisting medicinal).
Dosage: 9~15 g.

ASTRAGALI RADIX
黃耆
Huang Ci / Huang Qi
Astragalus Root

Astragalus root is the dried root of *Astragalus membranaceus* (Fisch.) Bge. var. *mongholicus* (Bge.) Hsiao or *Astragalus membranaceus* (Fisch.) Bge. (Fam. Leguminosae).
It contains not less than 16.0% of dilute ethanol-soluble extractives, not less than 17.0% of water extractives and not less than 0.04% of astragaloside IV.

Description: Cylindrical, few branched, slightly twisted, upper part relatively thick than the lower, 10~90 cm in length, 1~3.5 cm in diameter. Externally grayish-yellow or pale brownish-yellow, with longitudinal wrinkles and transverse lenticels. Texture hard and slightly tenacious, fracture highly fibrous and starchy, bark yellowish-white,

occupying 1/3 of root, wood pale yellow, with radiate striations and fissures, commonly known as "Jyu Hua Sin". Odor, slight; taste, slightly sweet, slightly bean-like on chewing.

Microscopic identification:

1. **Transverse section:** Cork composed of several layers of cells, phelloderm composed of collenchymatous cells, elongated tangentially. Phloem contains fiber bundles, arranged alternately with sieve tube groups; phelloderm occasionally scattered with stone cells and tubular cork tissue; outer part of phloem rays curved and fissured. Cambium in a ring. Xylem vessels singly scattered or 2~3 in groups, containing xylem fiber bundles, xylem rays distinct. Parenchymatous cells contain starch granules.
2. **Powder:** Pale yellow. Phloem fibers slender, 600~3,400 μm in length; xylem fibers 500~3,000 μm in length, wall thickened. Vessels mainly reticulate or bordered-pitted, spiral vessels occasionally visible, up to 170 μm in diameter. Stone cells rare, rectangular, subrounded or irregular, wall extremely thickened, a few of stone cells with thin walls. Cork cells polygonal, brown. Starch granules mostly simple, subrounded, 4~15 μm in diameter; occasionally compound granules composed of 2~3 components.

Thin layer chromatographic identification test (General rule 1010.3):

1. Sample solution: Add 1.0 g of powdered sample to 15 mL of methanol, ultrasonicate for 30 minutes, filter and use the filtrate.
2. Reference drug solution: Use 1.0 g of the reference drug as the same method described above.
3. Reference standard solution: Weigh accurately a quantity of astragaloside IV and dissolve in methanol to produce a solution containing 1.0 mg per mL.
4. Procedure: Use silica gel F_{254} as the coating substance and a solution of *n*-butanol, 4 N ammonia and ethanol (5:2:1) as the developing solvent. Apply 10 μL of each of the above solutions to the plate. Once the top of the solvent rise to about 5~10 cm from the origin, dry in air. Spray with a 10% solution of sulfuric acid in ethanol (H_2SO_4/EtOH TS) and heat at 105℃ until the spots become visible. The spots in the chromatogram obtained from the sample solution correspond in R_f values and color to the spots in the chromatogram obtained from the reference drug solution and the reference standard solution.

Impurities and other requirements:

1. Total ash: Not more than 7.0% (General rule 5004).
2. Acid-insoluble ash: Not more than 2.0% (General rule 5004).
3. Total heavy metals: Not more than 10.0 ppm (General rule 3005).
4. Cadmium (Cd): Not more than 0.3 ppm (General rule 3049, 3050).
5. Lead (Pb): Not more than 5.0 ppm (General rule 3007, 3049, 3050).
6. Mercury (Hg): Not more than 0.2 ppm (General rule 3049).
7. Arsenic (As): Not more than 2.0 ppm (General rule 3006, 3049, 3050).
8. Copper (Cu): Not more than 20.0 ppm (General rule 3049).
9. Pesticide residues:
   (1) The total DDT content: Not more than 1.0 ppm (General rule 3052).
   (2) The total BHC content: Not more than 0.9 ppm (General rule 3052).
   (3) The total PCNB content: Not more than 1.0 ppm (General rule 3052).
10. Aflatoxins: Not more than 15.0 ppb (General rule 3053).

Assay:

1. Astragaloside IV:
   (1) Mobile phase: A solution of acetonitrile and water (32:68). The ratio varies as required.
   (2) Reference standard solution: Weigh accurately a quantity of astragaloside IV and dissolve in methanol to produce a solution containing 0.5 mg per mL.
   (3) Sample solution: Weigh accurately 4.0 g of powdered sample to a Soxhlet extractor, accurately add 40 mL of methanol, stand overnight, add a quantity of methanol, heat under reflux for 4 hours, evaporate the filtrate to dryness, dissolve the residue with 10 mL of water, slightly heat to dissolve the residue, extract shaking for four times each with 40 mL of *n*-butanol saturated with water, combine the *n*-butanol extracts, wash twice with 40 mL of ammonia solution, discard the ammonia layer, evaporate the *n*-butanol extracts to dryness, dissolve the residue with 5 mL of water, cool. Apply it to a column (1.5 cm in inner diameter, 12 cm in length) packed with D101 macroporous resin, elute with 50 mL of water, discard the water solution, elute again with 30 mL of 40% ethanol, discard the eluates, elute final 80 mL of 70% ethanol, collect the eluates, evaporate to dryness, dissolve the residue of methanol, transfer to a 5-mL volumetric flask, add methanol to volume and mix well.
   (4) Chromatographic system: It is equipped with an evaporative light-scattering detector (ELSD) and a column packed with octadecylsilanized silica gel. The number of theoretical plates of the peak of astragaloside IV should not be less than 4,000.

(5) Procedure: Inject accurately 10 μL and 20 μL of each of the reference standard solution and 20μL of the sample solution into the apparatus, and use a calibration equation of logarithm alteration of two external standards calculate the content.

2. Water extractives: Carry out the method for determination of water extractives (General rule 5006).
3. Dilute ethanol extractives: Carry out the method for determination of dilute ethanol-soluble extractives (General rule 5006).

Storage: Refrigerate or store in a cool and dry place, and protect from moisture and insects.
Usage: Tonifying and replenishing medicinal (Qi-tonifying medicinal).
Dosage: 9~30 g.

ATRACTYLODIS MACROCEPHALAE RHIZOMA
白朮
Bai Jhu / Bai Zhu
White Atractylodes Rhizome

White atractylodes rhizome is the dried rhizome of *Atractylodes macrocephala* Koidz. (Fam. Compositae).
It contains not less than 18.0% of dilute ethanol-soluble extractives and not less than 22.0% of water extractives.

Description: Fist-shaped masses, with several warty and short branches and extending axis of rhizomes, swollen as ungulate-shaped at the lower part, 3~13 cm in length, 1.5~7 cm in diameter. Externally yellowish-brown or grayish-brown, with interrupted longitudinal wrinkles and some transverse grooves, with disk-like bud scars at the apex of warty branches, the upper part of rhizome remained with stems or stems scars, the lower part with the spotted roots or its scars. Texture hard, fracture yellowish-white in cortex, color deeper in the middle, cambium ring brown, scattered with yellow dotted oil cavities. The baking-dried material horny and relatively dark colored or cracked in section view. Odor, aromatic; taste, sweet, slightly pungent and slightly viscous.

Microscopic identification:

1. **Transverse section:** Cork composed of several layers of cork cells, containing 1~2 strips of discontinuous stone cells. Cortex relatively narrow. Phloem narrow and long, relatively old, occasionally with phloem fiber bundles present. Cambium in a ring. Xylem vessel bundles singly stranded or 2~3 branched, arranged radially; vessels singly scattered or several distributed radially; xylem fiber bundles existed in the internal part of the xylem. Pith relatively broad. Cortex, rays and pith all scattered with large lysigenous oil cavities, containing yellow oil droplets. Parenchymatous cells contain inulin and fill with very fine raphides of calcium oxalate.
2. **Powder:** Pale yellowish-brown. Inulin fan-shaped, scattered or existed inside parenchymatous cells. Stone cells subpolygonal, subrectangular, subsquare or suboblong, 37~64 μm in diameter, few stone cells fusiform, up to 117 μm in length, walls vary in thickness, occasionally with distinct striations, pit canals and lumina also present. Raphides of calcium oxalate irregularly scattered in parenchymatous cells, 10~32 μm in length. Fibers fusiform, slightly bended, edge uneven, oblique or relatively truncate at the end, 22~34 μm in diameter, walls extremely thickened, with distinct pit canals, occasionally containing yellowish-brown contents or raphides. Reticulate and bordered-pitted vessels 16~56 μm in diameter. Cork cells and tracheid also exist.

Thin layer chromatographic identification test (General rule 1010.3):

1. Sample solution: Add 1.0 g of powdered sample to 10 mL of *n*-hexane, ultrasonicate for 30 minutes, filter and make up to 10 mL, use the filtrate.
2. Reference drug solution: Use 1.0 g of the reference drug as the same method described above.
3. Procedure: Use silica gel F_{254} as the coating substance and a solution of *n*-hexane as the developing solvent. Apply 5 μL of each of the above solutions to the plate. Once the top of the solvent rise to about 5~10 cm from the origin, dry in air. Spray with a solution of *p*-dimethylaminobenzaldehyde (*p*-dimethylamino-benzaldehyde TS), heat at 105℃ for 2 minutes, and examine under visible light. The spots in the chromatogram obtained from the sample solution correspond in R_f values and color to the spots in the chromatogram obtained from the reference drug solution.

Impurities and other requirements:

1. Loss on drying: Not more than 15.0% under heating at 105℃ for 5 hours (General rule 5008).
2. Total ash: Not more than 6.0% (General rule 5004).
3. Acid-insoluble ash: Not more than 2.0% (General rule 5004).
4. Arsenic (As): Not more than 5.0 ppm (General rule 3006, 3049, 3050).

Assay:

1. Water extractives: Carry out the method for determination of water extractives (General rule 5006).
2. Dilute ethanol extractives: Carry out the method for determination of dilute ethanol-soluble extractives (General rule 5006).

Storage: Store in a cool and dry place, and protect from insects.
Usage: Tonifying and replenishing medicinal (Qi-tonifying medicinal).

Dosage: 6~15 g.

ATRACTYLODIS RHIZOMA
蒼朮
Cang Jhu / Cang Zhu
Atractylodes Rhizome

Atractylodes rhizome is the dried rhizome of *Atractylodes chinensis* (DC.) Koidz. or *Atractylodes lancea* (Thunb.) DC. (Fam. Compositae).
It contains not less than 20.0% of dilute ethanol-soluble extractives and not less than 33.0% of water extractives.

Description:
1. Rhizome of *Atractylodes chinensis*: Lumpy or nodular-cylindrical, 4~9 cm in length, 1~4 cm in diameter. Externally brownish-black, brownish-yellow when peeled. Texture relatively lax, fracture scattered with yellowish-brown oil cavities. Odor, relatively weak; taste, pungent and bitter.
2. Rhizome of *Atractylodes lancea*: Irregularly moniliform or nodular-cylindrical, slightly curved, occasionally branched, 3~10 cm in length, 1~2 cm in diameter. Externally grayish-brown, with wrinkles and remained fibrous roots, apex with stem scars or remained stem base. Texture compact, fracture yellowish-white or grayish-white, scattered with numerous orange-yellow or brownish-red oil cavities and crystallized out white fine needle crystals after exposing for a long time. Odor, characteristic; taste, slightly sweet, pungent and bitter.

Microscopic identification:
1. **Transverse section:**
   (1) Rhizome of *Atractylodes chinensis*: Cork composed of several layers of cells, irregular in shape, containing stone cells bands and composing of 2~3 rows of subsquare stone cells. Cortex broad. Phloem narrow. Cambium in a ring. Xylem fiber bundles relatively few, arranged alternately with vessels. Oil cavities relatively few, 125~718 μm in diameter, scattered in parenchymatous cells; oil cavities relatively large in pith.
   (2) Rhizome of *Atractylodes lancea*: Cork composed of 10~40 rows of cork cells, containing subsquare stone cells bands, 130~700 μm in diameter. Cortex relatively broad. Phloem narrow. Cambium in a ring. Xylem with fiber bundles at the inner side, relatively large and numerous, arranged alternately with vessel groups; vessels singly scattered or in bundles, arranged radially. Large oil cells scattered in cortex, rays and pith. Parenchymatous cells contain raphides of calcium oxalate.
2. **Powder:** Brown. Cork cells irregular in shape, mostly angular or subsquare, stone cells usually linked with cork cells, subsquare, the margins irregular. Xylem fibers in bundles, slender and fusiform, 5~40 μm in diameter, 80~700 μm in length. Minute raphides of calcium oxalate usually visible, 5~20 μm in length. Reticulate, bordered-pitted and spiral vessels visible, 10~55 μm in diameter.

Thin layer chromatographic identification test (General rule 1010.3):
1. Sample solution: Add 1.0 g of powdered sample to 10 mL of methanol, ultrasonicate for 30 minutes, cool, filter, and make up to 10 mL.
2. Reference drug solution: Use 1.0 g of the reference drug as the same method described above.
3. Procedure: Use silica gel F_{254} as the coating substance and a solution of cyclohexane and ethyl acetate (7:3) as the developing solvent. Apply 5 μL of each of the above solutions to the plate. Once the top of the solvent rise to about 5~10 cm from the origin, dry in air. Examine under the ultraviolet light at 254 nm. The spots in the chromatogram obtained from the sample solution correspond in R_f values and color to the spots in the chromatogram obtained from the reference drug solution.

Impurities and other requirements:
1. Total ash: Not more than 7.0% (General rule 5004).
2. Acid-insoluble ash: Not more than 1.5% (General rule 5004).
3. Total heavy metals: Not more than 10.0 ppm (General rule 3005).
4. Arsenic (As): Not more than 5.0 ppm (General rule 3006, 3049, 3050).

Assay:
1. Water extractives: Carry out the method for determination of water extractives (General rule 5006).
2. Dilute ethanol extractives: Carry out the method for determination of dilute ethanol-soluble extractives (General rule 5006).

Storage: Store in a cool and dry place, and protect from moisture.
Usage: Dampness-dispelling medicinal.
Dosage: 3~9 g.

AUCKLANDIAE RADIX
木香
Mu Siang / Mu Xiang
Costus Root

Costus root is the dried root of *Aucklandia lappa* Decne. (Fam. Compositae).

It contains not less than 17.0% of dilute ethanol-soluble extractives, not less than 21.0% of water extractives and not less than 0.6% of costunolide.

Description: Cylindrical, occasionally branched, or longitudinal semi-cylindrical lobes, often processed into 5~15 cm small pieces, 0.4~5.5 cm in diameter. Externally yellowish-brown or grayish-brown, with distinct longitudinal furrows, lateral root scars or slender lateral roots, occasionally with visible reticulations. Relatively fine roots with more dense and deep wrinkles and dark resinous spots visible, occasionally with a wide longitudinal furrows, the surface of furrows dark brown, mostly rotted. Texture hard and heavy, fracture relatively even, pale grayish-yellow, thickness of cortex about 1/3 of root radius, nearly cambium gray-brown, pith occasionally with fissures, numerous large brown yellow oil spots (oil cavities) in cortex and wood, the center of old roots decayed into the hollows. Odor, characteristic and aromatic; taste, sweet and then bitter, slightly numb.

Microscopic identification:

1. **Transverse section:** Cork composed of 2~6 layers of cork cells, rhytidome occasionally remained. Phloem relatively broad, with distinct sieve tube groups; phloem fiber bundles zero, sparsely distributed or arranged in 1~3 interrupted whorls. Cambium in an interrupted ring. Xylem vessels radially elongated, singly scattered or occasionally linked by several, xylem fibers few, distributed among or near vessels, mostly distributed near the root center. Large oil cavities scattered among phloem and xylem rays, the longer one up to 263 μm long, and the shorter one up to 254 μm long, usually containing yellow secretory contents. Parenchymatous cells filled with relative amount of inulin.
2. **Powder:** Brown. Inulin fairly abundant, in irregular masses or fan-shaped, with radial striations. Xylem fibers mostly in bundles, yellow, long-fusiform, oblique or taper at the end, 16~24 μm in diameter, wall 4~5 μm thick, pit apertures transverse-porous, cruciate or V-shaped. Phloem fibers zero or rare, up to 33 μm in diameter, wall up to 9 μm thick. Reticulate vessels frequent, bordered-pitted and scalariform vessels also present, 10~90 μm in diameter, vessel elements generally short, some up to 30 μm in diameter. Pale yellow oil cavities uncommonly present. Cork cells vary in shapes, thin-walled, pale yellowish-brown, anticlinal walls occasionally undulate. Some parenchymatous cells contain small prisms of calcium oxalate.

Thin layer chromatographic identification test (General rule 1010.3):

1. Sample solution: Add 3.0 g of powdered sample to 10 mL of ethanol, ultrasonicate for 30 minutes, filter and use the filtrate.
2. Reference drug solution: Use 3.0 g of the reference drug as the same method described above.
3. Reference standard solution: Weigh accurately 1.0 mg of costunolide and dissolve in 1 mL of methanol to produce a solution containing 1.0 mg per mL.
4. Procedure: Use silica gel F_{254} as the coating substance and a solution of *n*-hexane, ethyl acetate and formic acid (15:5:1) as the developing solvent. Apply 5 μL of each of the above solutions to the plate. Once the top of the solvent rise to about 5~10 cm from the origin, dry in air. Spray with a 10% solution of sulfuric acid in ethanol (H_2SO_4/EtOH TS) and heat at 100℃ until the spots become visible. The spots in the chromatogram obtained from the sample solution correspond in R_f values and color to the spots in the chromatogram obtained from the reference drug solution and the reference standard solution.

Impurities and other requirements:

1. Loss on drying: Not more than 15.0% under heating at 105℃ for 5 hours (General rule 5008).
2. Total ash: Not more than 4.0% (General rule 5004).
3. Acid-insoluble ash: Not more than 1.0% (General rule 5004).
4. Arsenic (As): Not more than 5.0 ppm (General rule 3006, 3049, 3050).

Assay:

1. Costunolide:
   (1) Mobile phase: A solution of methanol and water (13:7). The ratio varies as required.
   (2) Reference standard solution: Place costunolide in a phosphorus pentoxide dryer at 50°C, and depressurize (below 5 mm Hg) for 12 hours. Weigh accurately 1.0 mg and dissolve in methanol to 10 mL, and mix well.
   (3) Sample solution: Weigh accurately 0.3 g of powdered sample, transfer to a conical flask with stopper, add accurately 50 mL of chloroform, stopper tightly and weigh. Stand for overnight, ultrasonicate for 30 minutes, cool and weigh again, replenish the loss weight with chloroform, shake, filter, measure accurately 3 mL of the filtrate to an evaporating dish, evaporate to dryness, dissolve the residue in 2 mL of methanol in warm, transfer to 10-mL volumetric flask, and make up to constant volume, mix well.
   (4) Chromatographic system: The liquid chromatography is equipped with an ultraviolet absorption photometer (wavelength: 225 nm) and a column (4~6 mm × 15~25 cm) packed with octadecylsilanized silica gel (5~10 μm in particle diameter). The column temperature is maintained at room temperature. Inject reference standard solution into the liquid

chromatography apparatus for five times, and record the peak areas. The relative standard deviation of the peak area of costunolide should not be more than 1.5%.

(5) Procedure: Inject accurately 20 μL of each of the reference standard solution and the sample solution into the liquid chromatography apparatus, and calculate the content.

2. Water extractives: Carry out the method for determination of water extractives (General rule 5006).
3. Dilute ethanol extractives: Carry out the method for determination of dilute ethanol-soluble extractives (General rule 5006).

Storage: Store in a cool and dry place, and protect from moisture.
Usage: Pain-relieving and diarrhea-checking with qi-moving medicinal.
Dosage: 1.5~6 g.

AURANTII IMMATURUS FRUCTUS
枳實
Jhih Shih / Zhi Shi
Immature Bitter Orange

Immature bitter orange is the dried young fruit of *Citrus aurantium* L. and its cultivated varieties or *Citrus sinensis* Osbeck (Fam. Rutaceae).
It contains not less than 12.0% of dilute ethanol-soluble extractives, not less than 20.0% of water extractives and not less than 0.30% of synephrine.

Description: Semispheroidal, a few spheroidal, 0.5~2.5 cm in diameter. Exocarp darkish-green or dark brownish-green, with granular protuberances and wrinkles, remained with distinct stylopodium or fruit stalk scar. Mesocarp slightly protuberant, yellowish-white or yellowish-brown, 0.3~1.2 cm thick, with 1~2 rows of oil cavities on the outer part of pericarp. Pulp vesicles brown. Texture hard. Odor, aromatic; taste, bitter and slightly sour.

Microscopic identification:

1. **Transverse section:** Epidermis of pericarp scattered with villus cells, 100~200 μm in length, epidermis composed of single layer of small cells, 10~15 μm in diameter, inside showing parenchymatous tissue of pericarp, cells arranged densely in irregularly hexagon-shape, cells gradually larger from outside to inside, the outside layer with cells 20~30 μm in diameter, the inside layer with cells up to 150 μm in diameter, pericarp with pit canals, scattered with collenchymatous cells in bundles, normally 3~5 in a group. Cells with oil-shape contents.
2. **Powder:** Pale yellow or brownish-yellow. Mesocarp cells subrounded or irregular in shape, walls thickened unevenly. Epidermal cells of pericarp polygonal, subsquare or rectangular in surface view, stomata actinocytic, 18~26 μm in diameter, with 5~9 subsidiary cells; epidermal cells of pericarp covered with cuticle in sectional view. Prisms of calcium oxalate scattered in pericarp and juice vesicle, oblique-square, irregularly polygonal or double-conical, 2~24 μm in diameter. Hesperidin crystals existed in parenchymatous cells, yellow or colorless, rounded or irregular in shape masses, occasionally with distinct radial striations. Fragments of oil cavities usually found, secretory cells slender and curve. Spiral, reticulate vessels and tracheids fine.

Thin layer chromatographic identification test (General rule 1010.3):

1. Sample solution: Add 1.0 g of powdered sample to 10 mL of methanol, ultrasonicate for 30 minutes, filter and use the filtrate.
2. Reference drug solution: Use 1.0 g of the reference drug as the same method described above.
3. Reference standard solution: Weigh accurately a quantity of synephrine and dissolve in methanol to produce a solution containing 0.5 mg per mL.
4. Procedure: Use silica gel F_{254} as the coating substance and the supernatant of *n*-butanol, glacial acetic acid and water (4:1:5) as the developing solvent. Apply 5 μL of each of the above solutions to the plate. Once the top of solvent rise to about 5~10 cm from the origin, dry in air. Spray with a 1% solution of ninhydrin in ethanol (Ninhydrin/EtOH TS), heat at 105℃ until the spots become visible. The spots in the chromatogram obtained from the sample solution correspond in R_f values and color to the spots in the chromatogram obtained from the reference drug solution and the reference standard solution.

Impurities and other requirements:

1. Loss on drying: Not more than 14.0% under heating at 105℃ for 5 hours (General rule 5008).
2. Total ash: Not more than 7.0% (General rule 5004).
3. Acid-insoluble ash: Not more than 2.0% (General rule 5004).

Assay:

1. Synephrine:
   (1) Mobile phase: A solution of 0.1% sodium dodecyl sulfate with 0.075% phosphoric acid and acetonitrile (68:32). The ratio varies as required.
   (2) Reference standard solution: Weigh accurately a quantity of synephrine and dissolve in methanol to produce a solution containing 0.1 mg per mL.
   (3) Sample solution: Weigh accurately 0.5 g of powdered sample, transfer to a 50-mL centrifuge tube, add 25 mL of 50% methanol,

weigh, ultrasonicate for 30 minutes, centrifuge for 10 minutes. Transfer the supernatant to a 250-mL rounded flask, elute again, combine the supernatant, and evaporate to dryness with a rotary evaporator. Dissolve the residue in 50% methanol, transfer to a 25-mL volumetric flask, add 50% methanol to volume, filter and use the filtrate.

(4) Chromatographic system: The liquid chromatography is equipped with an ultraviolet absorption photometer (wavelength: 224 nm) and a column packed with octadecylsilanized silica gel. The number of theoretical plates of the peak of synephrine should not be less than 8,000.

(5) Procedure: Inject accurately 10 μL of each of the reference standard solution and the sample solution into the liquid chromatography apparatus, and calculate the content.

2. Water extractives: Carry out the method for determination of water extractives (General rule 5006).
3. Dilute ethanol extractives: Carry out the method for determination of dilute ethanol-soluble extractives (General rule 5006).

Storage: Store in a ventilated and dry place, and protect from mold and insects.
Usage: Qi-regulating medicinal.
Dosage: 3~10 g.

BAMBUSAE CAULIS IN TAENIA
竹茹
Jhu Ru / Zhu Ru
Bamboo Shavings

Bamboo shavings is the dried middle shavings of culm of *Phyllostachys nigra* (Lodd.) Munro var. *henonis* (Mitf.) Stapf ex Rendle, *Bambusa tuldoides* Munro or *Sinocalamus beecheyanus* (Munro) McClure var. *pubescens* P. F. Li (Fam. Gramineae).

Description: Slivers or filamentary, coiled each other in a mass, varying in length, about 0.5 mm thick, 5~7 mm in width. Externally greenish-green or pale yellowish-white, slightly rough, fibrous, with fine longitudinally striations. Texture light and tenacious. Odor, slight; taste, slightly sweet.

Impurities and other requirements:
1. Loss on drying: Not more than 7.0% under heating at 105℃ for 5 hours (General rule 5008).
2. Total ash: Not more than 4.0% (General rule 5004).
3. Acid-insoluble ash: Not more than 1.5% (General rule 5004).

Storage: Refrigerate or store in a cool and dry place, and protect from mold and color changing.
Usage: Phlegm-dispelling medicinal (Heat-phlegm clearing and resolving medicinal).
Dosage: 4.5~9 g.

BAMBUSAE CONCRETIO SILICEA
天竺黃
Tian Jhu Huang / Tian Zhu Huang
Tabasheer

Tabasheer is the dried masses of secretion in culm of *Bambusa textilis* McClure or *Schizostachyum chinense* Rendle (Fam. Gramineae).

Description: Irregular masses or granules in nature, larger one 1~1.5 cm in length, smaller one 1~2 mm in length. Externally milky, grayish-white or grayish-blue, surface often accompanied by dust powder. Texture light and fragile, easily broken, fracture lustrous, hygroscopic strongly, silicone-like transparent after absorbing water. Odorless; taste, weak, with a cooling sensation, viscous on licking, granular on chewing.

Identification:
1. Check silicon dioxide: Ignite and incinerate a quantity of powdered sample, dissolve the residue in a solution of 1 volume of hydrochloric acid and 1 volume of nitric acid, filter. Take the filtrate, add ammonium molybdate, shake well, add ferrous sulfate, a blue color is produced and indicates the presence of SiO_2.
2. Check alkaline: Add drops of phenolphthalein solution in natural tabasheer extract, a pink color isn't produced; in synthesized tabasheer extract, a purplish-red color is produced.
3. Check reducing substances: Aqueous extract boils with a few drops of potassium permanganate solution, color fading is produced and indicates the presence of reducing substances, such as carbohydrates, etc.
4. Check aluminum salt: Add 1 drop of potassium ferrocyanide to a piece of filter paper, after drying, apply 1 drop of the sample solution in hydrochloric acid, 10 drops of distilled water and 1 drop of alizarin red solution in ethanol, expose to ammonia vapor, a red ring is produced and indicates the presence of aluminum salt.
5. Check volume ratio: Take 10.0 g of medium size powdered sample into a measuring cylinder, and the volume not less than 35 mL.
6. Check water absorbing capacity: Take 5.0 g of powdered sample, add 50 mL of water, stand for a moment, filter through a moistened filter paper, the filtrate not more than 44 mL.

Storage: Store in a dry place and preserve in a well-closed container.

Usage: Phlegm-dispelling medicinal (Heat-phlegm clearing and resolving medicinal).
Dosage: 3~10 g.

BAPHICACANTHI CUSIAE RHIZOMA ET RADIX
南板藍根
Nan Ban Lan Gen / Nan Ban Lan Gen
Baphicacanthus Rhizome and Root

Baphicacanthus rhizome and root is the dried rhizome and root of *Baphicacanthus cusia* (Nees) Bremek. (Fam. Acanthaceae).
It contains not less than 6.0% of dilute ethanol-soluble extractives and not less than 8.0% of water extractives.

Description: Rhizome cylindrical and slightly square, branched, 2~6 mm in diameter. Externally grayish-brown, nodes swollen, with numerous curved and slender roots, about 1 mm in diameter, with terrestrial stem at the upper part, occasionally with branches arranged opposite. Texture hard and fragile, fracture uneven, with broad pith in the center. Odor, slight; taste, week.

Microscopic identification:

1. **Transverse section:**
   (1) Rhizome: Epidermis composed of 1 layer of cells. Cortex relatively broad, cells elongated tangentially; cystoliths relatively numerous, subrounded or oblong, 17~33 μm in diameter; fibers singly scattered or in a bundle; endodermis distinct. Phloem relatively narrow; fibers singly scattered or in a bundle, wall slightly lignified or unlignified. Xylem vessels singly scattered or several in a group; xylem fibers relatively developed, wall lignified. Xylem rays broad, 2~8 layers of cells. Pith with distinct pits; cystoliths rare.
2. **Powder:** Yellowish-brown. Epidermal cells subrounded, subsquare or subrectangular, arranged tangentially. Cortex composed of parenchymatous cells, oval, oblong, long-oblong, subsquare, subrectangular or long-polygonal, containing cystoliths and starch granules. Cambium with cells rectangular or flat-rectangular, elongated tangentially. Xylem parenchymatous cells subrounded or subisodiametric-angular, membrane thick and strongly lignified. Xylem rays with cells oblong, long-oblong, square or long-polygonal, arranged radially. Xylem fibers with septum, subrounded, oblong or subisodiametric-angular, septum wall thickened and strongly lignified. Vessels extremely lignified, mainly bordered-pitted and reticulate. Fiber-like and tube-like tracheids are visible. Pith cells subrounded, isodiametric-polygonal or long-polygonal, with intercellular spaces, containing cystoliths and starch granules.

Thin layer chromatographic identification test (General rule 1010.3):

1. Sample solution: Add 2.0 g of powdered sample to 20 mL of chloroform, heat under reflux for 1 hour then filter, evaporate the filtrate to 2 mL.
2. Reference drug solution: Use 2.0 g of the reference drug as the same method described above.
3. Reference standard solution: Weigh accurately a quantity of indigo and indirubin and dissolve in chloroform to produce a solution containing 1.0 mg and 0.5 mg per mL of each.
4. Procedure: Use silica gel F_{254} as the coating substance and a solution of benzene, chloroform and acetone (5:4:1) as the developing solvent. Apply 5 μL of each of the above solutions to the plate. Once the top of the solvent rise to about 5~10 cm from the origin, dry in air. Examine under visible light. The spots in the chromatogram obtained from the sample solution correspond in R_f values and color to the spots in the chromatogram obtained from the reference drug solution and the reference standard solution.

Impurities and other requirements:

1. Loss on drying: Not more than 15.0% under heating at 105℃ for 5 hours (General rule 5008).
2. Total ash: Not more than 11.0% (General rule 5004).
3. Acid-insoluble ash: Not more than 2.0% (General rule 5004).

Assay:

1. Water extractives: Carry out the method for determination of water extractives (General rule 5006).
2. Dilute ethanol extractives: Carry out the method for determination of dilute ethanol-soluble extractives (General rule 5006).

Storage: Store in a dry place, and protect from mold and insects.
Usage: Heat-clearing medicinal (Heat-clearing and detoxcating medicinal).
Dosage: 9~15 g.

BELAMCANDAE RHIZOMA
射干
Ye Gan / Ye Gan
Blackberry-lily Rhizome

Blackberry-lily rhizome is the dried rhizome of *Belamcanda chinensis* (L.) DC. (Fam. Iridaceae).
It contains not less than 12.0% of dilute ethanol-soluble extractives, not less than 12.0% of water extractives and not less than 0.10% of irisflorentin.

Description: Nodular and irregularly branched, varying in length, about 5 cm in length, 1~1.5 cm in diameter. Externally crumpled, upper part with some larger

dish-shaped scars of stem, about 1.5 cm in diameter, with annular scars of leaves, occasionally apex remained with stem bases and leaf bases, the lower and lateral scattered with numerous scars of fibrous roots. Fibrous roots tenacious, about 1~2 mm in diameter, brownish-yellow, wax-luster. Texture hard, fracture granular, yellow. Odor, slight; taste, slightly pungent.

Microscopic identification:

1. **Transverse section:** Cork composed of several layers of cells, covered with epidermis occasionally remained. Cortex scattered with some leaf-trace vascular bundles in collateral type; endodermis indistinct. Vascular bundles of stele amphivasal or collateral type, scattered. Parenchymatous cells contain starch granules, as well as columnar crystals of calcium oxalate, a few of cells contain oil droplets.
2. **Powder:** Yellow. Columnar crystals of calcium oxalate usually broken, intact crystals 49~315 μm in length and 15~49 μm in diameter, tetrahedral or prism-polyhedral, extremity acute or blunt. Starch granules mostly gelatinized, simple ungelatinized starch granules round or oblong, 2~14 μm in diameter, hilum pointed; compound granules composed of 2~5 components. Reticulate, bordered-pitted and spiral vessels 15~49 μm in diameter. Cork cells yellow or pale yellow, polygonal in surface view, with thin and sinuous walls. Hypodermal cells slender, relatively truncate at the both ends, a few of cells irregular in shape, 63~380 μm in length and 22~43 μm in width, wall 3~9 μm thick, occasionally slightly curved. Fibers (stem) mostly in bundles, relatively long, extremity obtuse-rounded or truncated, 9~43 μm in diameter, wall about 3 μm thick, lignified, pit apertures of bordered-pits obliquely slit-shaped or V-shaped.

Thin layer chromatographic identification test (General rule 1010.3):

1. Sample solution: Add 1.0 g of powdered sample to 10 mL of methanol, ultrasonicate for 30 minutes, filter and make up the filtrate to 10 mL.
2. Reference drug solution: Use 1.0 g of the reference drug as the same method described above.
3. Procedure: Use silica gel F_{254} as the coating substance and a solution of ethyl acetate, methanol and water (10:2:1) as the developing solvent. Apply 5 μL of each of the above solutions to the plate. Once the top of the solvent rise to about 5~10 cm from the origin, dry in air. Examine under the ultraviolet light at 254 nm. The spots in the chromatogram obtained from the sample solution correspond in R_f values and color to the spots in the chromatogram obtained from the reference drug solution.

Impurities and other requirements:

1. Loss on drying: Not more than 10.0% under heating at 105℃ for 5 hours (General rule 5008).
2. Total ash: Not more than 8.0% (General rule 5004).
3. Acid-insoluble ash: Not more than 2.0% (General rule 5004).

Assay:

1. Irisflorentin:
   (1) Mobile phase: A solution of methanol and 0.2% phosphoric acid (53:47). The ratio varies as required.
   (2) Reference standard solution: Weigh accurately a quantity of irisflorentin and dissolve in methanol to produce a solution containing 10 μg per mL.
   (3) Sample solution: Weigh accurately 0.1 g of powdered sample, transfer to a conical flask with stopper, add accurately 25 mL of methanol, weigh, heat under reflux for 1 hour, cool, weigh again, replenish the loss of the weight with methanol, mix well, filter and use the successive filtrate.
   (4) Chromatographic system: The liquid chromatography is equipped with an ultraviolet absorption photometer (wavelength: 266 nm) and a column packed with octadecylsilanized silica gel. The number of theoretical plates of the peak of irisflorentin should not be less than 8,000.
   (5) Procedure: Inject accurately 10 μL of the reference standard solution and 10~20 μL of the sample solution into the liquid chromatography apparatus, and calculate the content.
2. Water extractives: Carry out the method for determination of water extractives (General rule 5006).
3. Dilute ethanol extractives: Carry out the method for determination of dilute ethanol-soluble extractives (General rule 5006).

Storage: Refrigerate or store in a cool and dry place.
Usage: Heat-clearing medicinal (Heat-clearing and detoxcating medicinal).
Dosage: 3~10 g.
Precaution and warning: Contraindicated in or used with caution in pregnancy.

BENINCASAE SEMEN
冬瓜子
Dong Gua Zih / Dong Gua Zi
Waxgourd Seed

Waxgourd seed is the dried ripe seed of *Benincasa hispida* (Thunb.) Cogn. (Fam. Cucurbitaceae).
It contains not less than 4.0% of dilute ethanol-soluble extractives and not less than 5.0% of water extractives.

Description: Oblate, 1~1.3 cm in length, 6~8 mm in width, 2 mm thick. Externally yellowish-white, fissures

occasionally, obtuse at one end, acute at the other end. Acute end with two prominences, hilum present at the relatively small ones; micropyle present obviously at the relatively large ones. Edges smooth (unilateral waxgourd seed) or with a circular edge at the both sides of the edge (bilateral waxgourd seed). Texture loose; cotyledons 2, pale white, oily. Odor, slight; taste, slightly sweet.

Microscopic identification:

1. **Transverse section:** Outermost layer of testa composed of 1 layer of square or subovoid epidermal cells covered with cuticle and numerous non-glandular hairs; the inner side composed of 7~15 layers of parenchymatous cells of testa, the cells present in the outer side relatively large, mostly strip-shaped; the inner side of the cells slightly small, subovoid, subrounded or irregular. The innermost layer of testa composed of 2~4 layers of stone cells, walls extremely thickened, subrounded, subovoid or suboblong, 12~50 μm in diameter, lignified. Contain 2 cotyledons, each composed of about 15 layers of cells, the outer and the inner side both composed of 1 row of dense parenchymatous cells, respectively, subsquare or subrectangular. About 10 layers of cells near testa strip-shaped, arranged palisade-like. Cotyledon cells filled with aleurone grains and oil droplets, unlignified.
2. **Powder:** Yellowish-brown. Numerous non-glandular hairs usually existed in the outer side of testa, unicellular, long whip-shaped. Epidermal cells of testa polygonal in surface view. Stone cells existed in the innermost of testa, arranged in a ring on the outer side of cotyledons, with distinct striations, subrounded, subovate or suboblong, 12~50 μm in diameter. Cotyledon cells filled with aleurone grains.

Impurities and other requirements:

1. Loss on drying: Not more than 10.0% under heating at 105℃ for 5 hours (General rule 5008).
2. Total ash: Not more than 6.0% (General rule 5004).
3. Acid-insoluble ash: Not more than 2.0% (General rule 5004).

Assay:

1. Water extractives: Carry out the method for determination of water extractives (General rule 5006).
2. Dilute ethanol extractives: Carry out the method for determination of dilute ethanol-soluble extractives (General rule 5006).

Storage: Refrigerate or store in a cool and dry place, and protect from mold and insects.
Usage: Phlegm-dispelling medicinal (Heat-phlegm clearing and resolving medicinal).
Dosage: 9~30 g.

BLETILLAE RHIZOMA
白及
Bai Ji / Bai Ji
Common Bletilla Tuber

Common bletilla tuber is the dried tuber of *Bletilla striata* (Thunb.) Reichb. f. (Fam. Orchidaceae).
It contains not less than 10.0% of dilute ethanol-soluble extractives and not less than 16.0% of water extractives.

Description: Irregularly oblate, mostly with 2~3 claw-like braches, 1.5~5 cm in length, 0.5~1.5 cm thick. Externally grayish-white or yellowish-white, processing several concentric rings and brown dotted rootlet scars, with protuberant stem scars at the upper part and a trace jointing to another tuber at the lower part. Texture hard and uneasily broken, fracture whitish and horny. Odor, slight; taste, bitter and viscous on chewing.

Microscopic identification:

1. **Transverse section:** Outermost layer composed of epidermal cells arranged in order, subrounded, subsquare or long-polygonal, 20~49 μm in diameter, covered with cuticle; inside showing cortex, composed of oblong, long-oblong, long-polygonal or irregular parenchymatous cells, cells vary in size, 45~195 μm in diameter, with intercellular spaces. Stele scattered with some independent vascular bundles, occasionally two vascular bundles connected or abreasted, vascular bundles closed and collateral. Vascular bundles surrounded by fiber groups, forming subrounded shape, 200~320 μm in diameter; fiber groups composed of 2~5 layers of fiber cells, walls about 12 μm thick, extremely lignified, 10~13 μm in diameter. Phloem mostly crescent, cells polygonal or subrounded. Vessels as rectangular or polygonal, walls thickened, extremely lignified, mainly in scalariform and spiral, 10~65 μm in diameter. Ground tissue scattered with subrounded mucilage cells, 100~350 μm in diameter containing raphides of calcium oxalate, about 50 μm in length. Parenchymatous cells contain starch granules, subrounded, with indistinct striations and hilum, simple granules or compound granules composed of 3~4 components, 3~15 μm in diameter.
2. **Powder:** Yellowish-white. Parenchymatous cells mostly present as irregular fragments. Mucilage cells extremely large, subrounded or oblong, about 380 μm in diameter, containing raphides of calcium oxalate, raphides very fine, 27~88 μm in length. Epidermal cells irregular in surface view, anticlinal walls undulate, slightly thickened, lignified or slightly lignified, with distinct pit canals, periclinal walls with sparsely short cleft-shaped pits; epidermal cells subsquare in sectional view, anticlinal walls moniliform thickened, cuticles relatively thickened. Hypodermal cells subpolygonal, walls slightly bended, occasionally moniliform thickened and

lignified. Fibers long-fusiform, walls lignified, containing oblique pits, occasionally crossed, V-shaped; small cells surround fiber bundles containing subrounded silica body, 7~10 μm in diameter, radially connected. Scalariform, bordered-pitted and spiral vessels also exist.

Thin layer chromatographic identification test (General rule 1010.3):

1. Sample solution: Add 2.0 g of powdered sample to 20 mL of 70% methanol, ultrasonicate for 30 minutes and filter. Evaporate the filtrate to dryness, dissolve the residue in 10 mL of water, extract and shake twice each with 20 mL of ethyl ether. Combine the ethyl ether extracts and evaporate to 1 mL.
2. Reference drug solution: Use 1.0 g of the reference drug as the same method described above.
3. Procedure: Use silica gel F_{254} as the coating substance and a solution of cyclohexane, ethyl acetate and methanol (6:2.5:1) as the developing solvent. Apply 5~10 μL of the sample solution and 5 μL of reference drug solution to the plate. Once the top of the solvent rise to about 5~10 cm from the origin, dry in air. Spray with a 10% solution of sulfuric acid in ethanol (H_2SO_4/EtOH TS), heat at 105℃ for several minutes, and stand for 30~60 minutes. Examine under visible light and ultraviolet light at 365 nm. The spots in the chromatogram obtained from the sample solution correspond in R_f values and color to the spots in the chromatogram obtained from the reference drug solution.

Impurities and other requirements:

1. Loss on drying: Not more than 14.0% under heating at 105℃ for 5 hours (General rule 5008).
2. Total ash: Not more than 4.0% (General rule 5004).
3. Acid-insoluble ash: Not more than 1.0% (General rule 5004).
4. Cadmium (Cd): Not more than 2.0 ppm (General rule 3049, 3050).
5. Lead (Pb): Not more than 30.0 ppm (General rule 3007, 3049, 3050).
6. Mercury (Hg): Not more than 2.0 ppm (General rule 3049).

Assay:

1. Water extractives: Carry out the method for determination of water extractives (General rule 5006).
2. Dilute ethanol extractives: Carry out the method for determination of dilute ethanol-soluble extractives (General rule 5006).

Storage: Store in a dry place, and protect from mold and insects.
Usage: Hemostatic medicinal.
Dosage: 6~15 g.

BOMBYCIS FAECES
蠶砂
Can Sha / Can Sha
Silkworm Dung

Silkworm dung is the dried dung of larva of *Bombyx mori* L. (Fam. Bombycidae).

Description: Short cylindrical granules, 3~5 mm in length, 2~3 mm in diameter. Externally blackish-brown, rough and uneven, with 6 longitudinal ridges and 3~4 transverse shallow striations, both ends slightly even, hexagonal. Texture hard and fragile, easily broken into brown fine powder when rubbed or moistened. Odor, slightly stinking and grassy.

Microscopic identification:

1. **Powder:** Grayish-brown or grayish-green. Cystoliths-containing cells subrounded, this large cells 47~77 μm in diameter. Clusters of calcium oxalate visible, 5~16 μm in diameter. Non-glandular hairs unicellular, 17~40 μm in diameter. Stomata of lower epidermis anomocytic, with 4~6 subsidiary cells. Spiral vessels 6~12 μm in diameter. Prism crystals and laticiferous tubes occasionally found.

Thin layer chromatographic identification test (General rule 1010.3):

1. Sample solution: Add 1.0 g of powdered sample to 10 mL of methanol, shake for 5 minutes, filter and use the filtrate.
2. Reference drug solution: Use 1.0 g of the reference drug as the same method described above.
3. Procedure: Use silica gel F_{254} as the coating substance and a solution of ethyl acetate, methanol and water (10:2:1) as the developing solvent. Apply 5 μL of each of the above solutions to the plate. Once the top of the solvent rise to about 5~10 cm from the origin, dry in air. Examine under the ultraviolet light at 254 nm. The spots in the chromatogram obtained from the sample solution correspond in R_f values and color to the spots in the chromatogram obtained from the reference drug solution.

Impurities and other requirements:

1. Total ash: Not more than 20.0% (General rule 5004).
2. Acid-insoluble ash: Not more than 11.0% (General rule 5004).

Storage: Refrigerate or store in a cool and dry place.
Usage: Wind-dampness-dispelling medicinal.
Dosage: 9~15 g, wrap-boiled.

BOMBYX BATRYTICATUS
白殭蠶
Bai Jiang Can / Bai Jiang Can
Stiff Silkworm

Stiff silkworm is the dried body of the 4~5th year's larva of *Bombyx mori* L. (Fam. Bombycidae) died of infection or artificial inoculation of *Beauveria bassiana* (Bals.) Vuillant, commonly known as "Jiang Chan".
It contains not less than 13.0% of dilute ethanol-soluble extractives and not less than 15.0% of water extractives.

Description: Subcylindrical, usually curved and shrunken, 2~5 cm in length, 5 mm in diameter. Externally white, grayish-white or pale green, covered with white powdery (aerial hypha and conidia). Head yellowish-brown, relatively round; 8 pairs of legs, protruding; caudal portion slightly dichotomic; segments protuberant. Texture hard and fragile, fracture green or blackish-brown, even and luster, commonly known as "Jieu Kou Jing Mian", with 4 brown rings of silk glands. Odor, slightly stinking; taste, slightly bitter.

Microscopic identification:

1. **Powder:** Pale yellow or yellowish-brown. Mycelia existed in the body walls or in pale brown translucent crystalline masses. Mycelia almost colorless, slender, 1~5 μm in diameter, rolled and twisted with each other. Broken pieces of trachea walls contain dark brown or colorless spiral filaments, 1~3 extremely fine undulating striations between filaments. Epidermis yellowish-white or grayish-white, the surface with reticulated shrunken striations and small pointed projections. Setae pits rounded or subrounded, the margin of the pits yellowish-brown or brown; setae yellow or yellowish-brown, surface smooth, the inner side irregular. Subcrystalline substances colorless, scattered or embedded in tissue, subsquare or irregular, the surface usually with fissures. Oil droplets, epidermis of mulberry leaf (containing stomata, cystoliths and trichomes), mesophyllous tissue and crystals of calcium oxalate also present.

Impurities and other requirements:

1. Loss on drying: Not more than 13.0% under heating at 105℃ for 5 hours (General rule 5008).
2. Total ash: Not more than 7.0% (General rule 5004).
3. Acid-insoluble ash: Not more than 2.0% (General rule 5004).

Assay:

1. Water extractives: Carry out the method for determination of water extractives (General rule 5006).
2. Dilute ethanol extractives: Carry out the method for determination of dilute ethanol-soluble extractives (General rule 5006).

Storage: Refrigerate or store in a cool and dry place, and protect from insects.
Usage: Liver-pacifying and wind-extinguishing medicinal.
Dosage: 5~9 g.

BORNEOLUM
冰片
Bing Pian / Bing Pian
Borneol

Borneol is the crystal produced from *Dryobalanops aromatica* Gaertn. f. (Fam. Dipterocarpaceae) by steam distillation, commonly known as "Mei Pian". Synthetic Borneol is camphor made by the hydrogenation reaction, numerous in the market.

Description:

1. Borneol (natural borneol): Transparent or translucent, plate or granular crystals, whitish or pale gray. Odor, aromatic; taste, pungent, with a cooling sensation. Volatile, smoke may generating when burned.
2. Synthetic borneol: Colorless, transparent, or white, translucent, loose and fragile, plate crystals. Odor, aromatic; taste, pungent, with a cooling sensation. Volatile, a heavy fume produced when burned with a bright flame.

Thin layer chromatographic identification test (General rule 1010.3):

1. Sample solution: Dissolve a quantity of powdered sample in ethanol to produce a solution containing 10.0 mg per mL.
2. Reference drug solution: Use a reference drug as the same method described above.
3. Procedure: Use silica gel F_{254} as the coating substance and a solution of *n*-hexane and ethyl ether (8:2) as the developing solvent. Apply 1 μL of each of the above solutions to the plate. Once the top of the solvent rise to about 5~10 cm from the origin, dry in air. Spray with a 5% solution of vanillin in sulfuric acid (Vanillin/H_2SO_4 TS), heat at 105℃ for 2 minutes until the spots become visible, and examine under visible light. The spots in the chromatogram obtained from the sample solution correspond in R_f values and color to the spots in the chromatogram obtained from the reference drug solution.

Specific optical rotation (General rule 1007):

1. Borneol (natural borneol): +34°~+37°.

Impurities and other requirements:

1. Total heavy metals: Not more than 5.0 ppm (General rule 3005).
2. Arsenic (As): Not more than 2.0 ppm (General rule 3006, 3049, 3050).

Storage: Store in a cool and dry place.
Usage: Orifice-opening medicinal.
Dosage: 0.15~0.3 g.
Precaution and warning: Used with caution in pregnancy.

BOVIS CALCULUS
牛黃
Niou Huang / Niu Huang
Oriental Bezoar

Oriental bezoar is the dried gallstone of *Bos taurus domesticus* Gmelin (Fam. Bovidae). If the bezoar is found during slaughter, the bile is filtered. The drug is collected, removed from surrounding thin membrane, and dried in the shade, commonly known as "Tian Ran Niou Huang".
It contains not less than 35.0% of bilirubin.

Description:
According to the different shapes, separate into "Dan Huang" and "Guan Huang":
1. Dan Huang: Mostly ovate, irregularly spheroidal, square round or triangular, 0.6~3.3 cm in diameter. Externally inaurate or brownish-yellow, fine and slightly lustrous, some with a layer of black lustrous thin membrane, commonly known as "Wu Jin Yi", some rough and with cracks. Texture light in weight and fragile, easily broken, fracture yellow, with neat concentric circular striations. Odor, aromatic; taste, bitter than slightly sweet, with a cooling sensation; not sticky on chewing, the solution can dyed the nails to yellow, commonly known as "Gua Jia".
2. Guan Huang: Tubular, surface uneven or with transverse curved lines, or broken into small pieces, about 3 cm in length, 1~1.5 cm in diameter. Externally reddish-brown or brown, with crack and small protuberance. Fracture less concentric circular striations, some hollow, with dark color.

Microscopic identification:
1. **Powder:** Small yellowish-brown granules or irregular masses, masses contain subsquare crystalloids varying in size.

Thin layer chromatographic identification test (General rule 1010.3):
1. Sample solution: Add 1.0 g of powdered sample to 10 mL of methanol, ultrasonicate for 30 minutes, filter and use the filtrate.
2. Reference drug solution: Use 1.0 g of the reference drug as the same method described above.
3. Reference standard solution: Weigh accurately a quantity of cholic acid and deoxycholic acid and dissolve in ethanol to produce a solution containing 2.0 mg per mL of each.
4. Procedure: Use silica gel F_{254} as the coating substance and a solution of xylene, ethyl acetate and glacial acetic acid (8:1:1) as the developing solvent. Apply 5 μL of each of the above solutions to the plate. Once the top of the solvent rise to about 5~10 cm from the origin, dry in air. Spray with a 10% solution of sulfuric acid and heat at 105℃ until the spots become visible. Examine under ultraviolet light at 365 nm. The spots in the chromatogram obtained from the sample solution correspond in R_f values and color to the spots in the chromatogram obtained from the reference drug solution and the reference standard solution.

Impurities and other requirements:
1. Acid-insoluble ash: Not more than 1.0% (General rule 5004).

Assay:
1. Bilirubin:
   (1) Mobile phase: A solution of methanol, acetonitrile and 1% acetic acid (88:10:2). The ratio varies as required.
   (2) Reference standard solution: Weigh accurately 10 mg of bilirubin and dissolve in chloroform to 25 mL. Measure accurately 5 mL of the mixture, add 5 mL of sulfuric acid-methanol solution, and add chloroform to 20 mL.
   (3) Sample solution: Weigh accurately 25 mg of coarse powdered sample, add 70 mL of a solution of chloroform and sulfuric acid-methanol (3:1), ultrasonicate for 5 minutes and make up to 100 mL. Centrifuge and use the supernatant.
   (4) Chromatographic system: The liquid chromatography is equipped with an ultraviolet absorption photometer (wavelength: 450 nm) and a column (6.0 mm × 15 cm) packed with octadecylsilanized silica gel. The column temperature is maintained at room temperature. The flow rate is about 2.0 mL/min. The retention time of bilirubin is about 5 minute. Inject reference standard solution into the liquid chromatography apparatus for five times, and record the peak areas. The relative standard deviation of the peak area of bilirubin should not be more than 2.0%.
   (5) Procedure: Inject accurately 10 μL of each of the reference standard solution and the sample solution into the liquid chromatography apparatus, and calculate the content.

Storage: Refrigerate or store in a cool and dry place, and preserve in a light-resistant, moisture-proof, crush-proof and well-closed container.
Usage: Liver-pacifying and wind-extinguishing medicinal.
Dosage: 0.15~0.3 g, used in pills or powder, not in decoction.

BUDDLEJAE FLOS
密蒙花
Mi Meng Hua / Mi Meng Hua
Pale Butterflybush Flower

Pale butterflybush flower is the dried flower bud and inflorescence of *Buddleja officinalis* Maxim. (Fam. Loganiaceae).
It contains not less than 13.0% of dilute ethanol-soluble extractives and not less than 10.0% of water extractives.

Description: Mainly small branches of inflorescence bearing dense flower buds, irregularly conical, 1.5~3 cm in length. Externally grayish-yellow or brownish-yellow, densely pubescent. Flower buds clavate, with the upper side slightly larger, 0.3~1 cm in length, 0.1~0.2 cm in diameter; calyx campanulate with 4 terminal lobes; corolla tube equal to or slightly longer than calyx, with 4 terminal lobes, lobes ovate, internally purplish-brown, scattered with sparse tomenta; stamens 4, inserted on the middle of corolla tube. Texture soft. Odor, slightly aromatic; taste, slightly pungent and bitter.

Microscopic identification:

1. **Transverse section:**
   (1) Flower in surface view: Sepals, lower epidermis of petals, the upper part of ovary and style densely covered with stellate non-glandular hairs, the basal cells subrounded, the apex usually 2-celled, each cell branched, walls thick, lumens linear. Non-epidermal cells of tuber-like sepals approximately rectangular, epidermal cells of corolla lobe polygonal. Epidermal cells of stigma villiform. Upper epidermis of corolla scattered with a few non-glandular hairs, unicellular, walls with numerous spiny protuberance. Pollen grains spheroidal, externally smooth, with 3 germinal pores.
2. **Powder:** Brown. Stellate hairs mostly broken; intact ones with the body 2-celled, the base juxtaposed, each cell branched, isometric or one long and one short, the apex gradually acute or hook-like. Pollen grains subrounded, the outer wall stratified indistinctly, with 3 germinal pores, externally smooth, granular reticulate striations faintly visible on the surface. Glandular hairs mostly scattered, 2-celled head biseriate arranged in short dumbbell-shaped or butterfly-shaped. Spiral and reticulate vessels visible.

Thin layer chromatographic identification test (General rule 1010.3):

1. Sample solution: Add 1.0 g of powdered sample to 10 mL of methanol, ultrasonicate for 30 minutes, cool, filter and make up the filtrate to 10 mL.
2. Reference drug solution: Use 1.0 g of the reference drug as the same method described above.
3. Procedure: Use silica gel F_{254} as the coating substance and chloroform as the developing solvent. Apply 10 μL of each of the above solutions to the plate. Once the top of the solvent rise to about 5~10 cm from the origin, dry in air. Spray with a solution of vanillin in sulfuric acid (Vanillin/H_2SO_4 TS), heat for 3 minutes, and examine under the ultraviolet light at 365 nm. The spots in the chromatogram obtained from the sample solution correspond in R_f values and color to the spots in the chromatogram obtained from the reference drug solution.

Impurities and other requirements:

1. Loss on drying: Not more than 12.0% under heating at 105℃ for 5 hours (General rule 5008).
2. Total ash: Not more than 8.0% (General rule 5004).
3. Acid-insoluble ash: Not more than 2.0% (General rule 5004).

Assay:

1. Water extractives: Carry out the method for determination of water extractives (General rule 5006).
2. Dilute ethanol extractives: Carry out the method for determination of dilute ethanol-soluble extractives (General rule 5006).

Storage: Store in a ventilated and dry place, and protect from moisture.
Usage: Heat-clearing medicinal.
Dosage: 3~9 g.

BUPLEURI RADIX
柴胡
Chai Hu / Chai Hu
Bupleurum Root

Bupleurum root is the dried root of *Bupleurum chinense* DC. or *Bupleurum scorzonerifolium* Willd. (Fam. Umbelliferae). It is commonly known as “Bei Chai Hu” and “Nan Chai Hu”.
It contains not less than 8.0% of dilute ethanol-soluble extractives, not less than 8.0% of water extractives and not less than 0.8% of the total amount of saikosaponin a, saikosaponin c and saikosaponin d.

Description:

1. Root of *Bupleurum chinense* (Bei Chai Hu): Conical or cylindrical, often branched, 6~15 cm in length, 0.3~0.8 cm in diameter, apex remained with 3~15 stem-bases or short fibrous leaf-bases. Externally blackish-brown or pale brown, with longitudinal wrinkles, rootlet scars and lenticels. Texture hard and tenacious, uneasily broken, fracture fibrous slat-shaped, bark pale brown, wood yellowish-white. Odor, slightly aromatic; taste, slightly bitter.
2. Root of *Bupleurum scorzonerifolium* (Nan Chai Hu): Relatively thin, less branched, 5~14 cm in

length, 0.2~0.6 cm in diameter, apex remained with numerous fibrous leaf-bases. Externally reddish-brown or blackish-brown, apex with distinct transverse protuberance. Texture slightly soft, easily broken, fracture slightly even. Odor, rancid.

Microscopic identification:

1. **Transverse section:**
   (1) Root of *Bupleurum chinense* (Bei Chai Hu): Cork composed of several layers of cells, inside showing 7~8 layers of phelloderm cells. Cortex scattered with oil cavities and clefts. Phloem scattered with oil cavities, phloem rays broad, sieve tubes indistinct. Cambium in a ring. Xylem vessels scattered sparsely, 1 bundle of xylem fibers arranged in an interrupted ring in the center; fibers polygonal, with walls thickened and lignified.
   (2) Root of *Bupleurum scorzonerifolium* (Nan Chai Hu): Cork composed of about 6~10 layers of cork cells, arranging in crown-shape. Cortex with relatively numerous and large oil cavities. Xylem vessels arranged radially, xylem fibers rare and scattered, mostly existing in the outer side of xylem.
2. **Powder:**
   (1) Root of *Bupleurum chinense* (Bei Chai Hu): Grayish-brown. Xylem fibers scattered or in bundles, long-fusiform, 8~17 μm in diameter, wall 2~6 μm thick, lignified, with indistinct striations, primary walls broken into short fibrous, pit canals faintly visible. Oil canals contain yellowish-brown or greenish-yellow strip-shaped secretions, surrounded by mostly shrunken parenchymatous cells. Reticulate and double-helix vessels 7~43 μm in diameter. Cork cells, parenchymatous cells of stem pith and epidermal cells of stem also present.
   (2) Root of *Bupleurum scorzonerifolium* (Nan Chai Hu): Yellowish-brown. Xylem fibers long-fusiform, 8~26 μm in diameter, wall 2~10 μm thick, lignified, with dense pits, pit canals faintly visible. Primary walls occasionally broken, with sparsely spiral clefts. Oil canals mostly broken, containing pale yellow strip-shaped secretions. Double-helix vessels easily visible. Fibers of leaf base long strip-shaped, up to about 51 μm in diameter, with densely spiral-shaped overlapping clefts.

Thin layer chromatographic identification test (General rule 1010.3):

1. Sample solution: Add 2.0 g of powdered sample to 10 mL of methanol, heat under reflux for 15 minutes, cool, filter and use the filtrate.
2. Reference drug solution: Use 2.0 g of the reference drug as the same method described above.
3. Reference standard solution: Weigh accurately 1.0 mg of saikosaponin and dissolve in 1 mL of methanol to produce a solution containing 1.0 mg per mL.
4. Procedure: Use silica gel F_{254} as the coating substance and a solution of ethyl acetate, ethanol and water (8:2:1) as the developing solvent. Apply 10 μL of each of the above solutions to the plate. Once the top of the solvent rise to about 5~10 cm from the origin, dry in air. Spray with a 2% solution of *p*-dimethylaminobenzaldehyde in 40% sulfuric acid (*p*-Dimethylaminobenzaldehyde TS), heat at 60℃ until the spots become visible, and examine under visible light and ultraviolet light at 365 nm. The spots in the chromatogram obtained from the sample solution correspond in R_f values and color to the spots in the chromatogram obtained from the reference drug solution and the reference standard solution.

Impurities and other requirements:

1. Foreign matter: Stems and leaves not more than 10.0% (General rule 5003).
2. Loss on drying: Not more than 13.0% under heating at 105℃ for 5 hours (General rule 5008).
3. Total ash: Not more than 10.0% (General rule 5004).
4. Acid-insoluble ash: Not more than 3.0% (General rule 5004).
5. Total heavy metals: Not more than 10.0 ppm (General rule 3005).
6. Arsenic (As): Not more than 5.0 ppm (General rule 3006, 3049, 3050).

Assay:

1. Saikosaponin a, saikosaponin c and saikosaponin d:
   (1) Mobile phase: A solution of saikosaponin c in water and acetonitrile (72:28); saikosaponin a, d in water and acetonitrile (65:35). The ratio varies as required.
   (2) Reference standard solution: Predry and weigh accurately 8.0 mg of saikosaponin and 10.0 mg of each of saikosaponin c and saikosaponin d, and dissolve all in methanol to produce a 20 mL solution.
   (3) Sample solution: Weigh accurately 500 mg of powdered sample, transfer to a 50-mL centrifuge tube, add accurately 35 mL of a solution of ammonia solution and methanol (1:20), heat under reflux for 3 hours, cool, make up to 50 mL with methanol, centrifuge. Evaporate 30 mL of the supernatant to dryness, dissolve the residue in methanol to 5 mL.
   (4) Chromatographic system: The liquid chromatography is equipped with an ultraviolet absorption photometer

(wavelength: 203 nm) and a column (4~6 mm × 15~25 cm) packed with octadecylsilanized silica gel (5~10 μm in particle diameter). The column temperature is maintained at 40℃. Inject reference standard solution into the liquid chromatography apparatus for five times, and record the peak areas. The relative standard deviation of the peak area of saikosaponin a, saikosaponin c and saikosaponin d should not be more than 1.5%.

(5) Procedure: Inject accurately 10 μL of each of the reference standard solution and the sample solution into the liquid chromatography apparatus, and calculate the content.

2. Water extractives: Carry out the method for determination of water extractives (General rule 5006).
3. Dilute ethanol extractives: Carry out the method for determination of dilute ethanol-soluble extractives (General rule 5006).

Storage: Store in a ventilated and dry place, and protect from insects.
Usage: Exterior-releasing medicinal (Wind-heat dispersing medicinal).
Dosage: 3~10 g.

CANNABIS FRUCTUS
火麻仁
Huo Ma Ren / Huo Ma Ren
Hemp Fruit

Hemp fruit is the dried ripe fruit of *Cannabis sativa* L. (Fam. Moraceae).
It contains not less than 3.0% of dilute ethanol-soluble extractives, not less than 5.0% of water extractives and should not germinate.

Description: Subovate, slightly flattened, 0.4~0.5 cm in length, 0.3~0.4 cm in diameter. Externally grayish-green or grayish-yellow, with reticulations, ribbed on both sides, apex slightly acute, base obtuse with round fruit stalk scar. Pericarp thin, easily broken. Testa green, endosperm milky-white and oily. Odor, slight; taste, weak then pungent and paralytic.

Microscopic identification:

1. **Transverse section:** Exocarp composed of 1 row of round or elliptical stone cells, about 12 μm in diameter, walls thickened and with distinct striations. Mesocarp composed of 2~4 rows of parenchymatous cells, containing pigments, 1 row of cells adjacent endocarp contain crystals of calcium oxalate, irregular in shape. Endocarp composed of 1 row of stone cells, cell edge contains irregularly undulating protuberance, cells vary in size and shape, subrectangular, triangle or polygonal, lumen extremely small, with distinct striations and pit canals. Walls of epidermal cells of testa thin, cell boundary indistinct, mostly stick on endocarp and not easy to separate. Endosperm grayish-white, surrounded embryo. Cotyledon cells pale yellow, containing fatty oil droplets.
2. **Powder:** Gray. Stone cell of exocarp, cell wall in anticlinal and undulated in surface view, cells vary in size, 60~90 μm in length, 10~50 μm in diameter, thick-walled. Endocarp cells yellowish-brown, palisade in sectional view, 70~220 μm in length, about 30~50 μm wide, cells arranged densely, lumen extremely small, with distinct striations and pit canals. Crystals of calcium oxalate mostly scattered in parenchymatous cells of mesocarp, about 5~15 μm in diameter, mainly prism or cluster crystals, occasionally present sandy crystals.

Thin layer chromatographic identification test (General rule 1010.3):

1. Sample solution: Add 5.0 g of powdered sample to 20 mL of methanol, ultrasonicate for 1 hour, filter and use the filtrate.
2. Reference drug solution: Use 5.0 g of the reference drug as the same method described above.
3. Procedure: Use silica gel F_{254} as the coating substance and a solution of *n*-hexane and acetone (2:1) as the developing solvent. Apply 5 μL of each of the above solutions to the plate. Once the top of the solvent rise to about 5~10 cm from the origin, dry in air. Examine under ultraviolet light at 365 nm. The spots in the chromatogram obtained from the sample solution correspond in R_f values and color to the spots in the chromatogram obtained from the reference drug solution.

Impurities and other requirements:

1. Loss on drying: Not more than 9.0% under heating at 105℃ for 5 hours (General rule 5008).
2. Total ash: Not more than 7.0% (General rule 5004).
3. Acid-insoluble ash: Not more than 4.0% (General rule 5004).

Assay:

1. Water extractives: Carry out the method for determination of water extractives (General rule 5006).
2. Dilute ethanol extractives: Carry out the method for determination of dilute ethanol-soluble extractives (General rule 5006).

Storage: Store in a cool and dry place, and protect from hot and insects.
Usage: Purgative medicinal (Laxative medicinal).
Dosage: 9~15 g.

CARTHAMI FLOS
紅花
Hong Hua / Hong Hua
Safflower

Safflower is the dried tubular flower of *Carthamus tinctorius* L. (Fam. Compositae).
It contains not less than 30.0% of dilute ethanol-soluble extractives, not less than 30.0% of water extractives and not less than 1.0% of hydroxysafflor yellow A.

Description: Tubular flowers without ovaries, about 1.5 cm in length. Externally red or reddish-orange. Corolla tubes slender, caudate, apex 5-lobed, the lobes narrowly, 5~8 mm in length. Stamens 5, anthers aggregated to a tube, exerted, yellow to brownish-yellow. Stigma 1, cylindrical, yellow, apex slightly 2-cleft. Odor, slightly aromatic; taste, slightly bitter.

Microscopic identification:

1. **Powder:** Orange-red. Secretory cells single layer arranged longitudinal, forming secretory ducts, 15~30 μm in diameter, containing pale yellow to reddish-brown secretions, secretory ducts usually accompanied by spiral vessels. Epidermal cells of corolla subrectangular or long strip-shaped in surface view, anticlinal walls wavy. Epidermal cells of stigma differentiated into conical unicellular hairs, epidermal cells of apex villous. Pollen grains subrounded or olivary, with 3 germinal pores, exine dentate-spinose, 30~70 μm in diameter. Parenchymatous cells contain prisms of calcium oxalate.

Thin layer chromatographic identification test (General rule 1010.3):

1. Sample solution: Add 1.0 g of powdered sample to 10 mL of ethanol, ultrasonicate for 30 minutes, cool, then filter and make up the filtrate to 10 mL.
2. Reference drug solution: Use 1.0 g of the reference drug as the same method described above.
3. Procedure: Use silica gel F_{254} as the coating substance and a solution of *n*-butanol, water and glacial acetic acid (7:2:1) as the developing solvent. Apply 5 μL of each of the above solutions to the plate. Once the top of the solvent rise to about 5~10 cm from the origin, dry in air. Examine under the ultraviolet light at 254 nm. The spots in the chromatogram obtained from the sample solution correspond in R_f values and color to the spots in the chromatogram obtained from the reference drug solution.

Impurities and other requirements:

1. Loss on drying: Not more than 15.0% under heating at 105℃ for 5 hours (General rule 5008).
2. Total ash: Not more than 16.0% (General rule 5004).
3. Acid-insoluble ash: Not more than 6.0% (General rule 5004).

Assay:

1. Hydroxysafflor yellow A:
   (1) Mobile phase: A solution of methanol, acetonitrile and 0.7% phosphoric acid (26:2:72). The ratio varies as required.
   (2) Reference standard solution: Weigh accurately a quantity of hydroxysafflor yellow A and dissolve in 25% methanol to produce a solution containing 0.13 mg per mL.
   (3) Sample solution: Weigh accurately 0.4 g of powdered sample, transfer to a conical flask with stopper, add accurately 50 mL of 25% methanol, weigh, ultrasonicate for 40 minutes, cool, weigh again, replenish the loss of the weight with 25% methanol, mix well, filter and use the successive filtrate.
   (4) Chromatographic system: The liquid chromatography is equipped with an ultraviolet absorption photometer (wavelength: 403 nm) and a column packed with octadecylsilanized silica gel. The number of theoretical plates of the peak of hydroxysafflor yellow A should not be less than 3,000.
   (5) Procedure: Inject accurately 10 μL of each of the reference standard solution and the sample solution into the liquid chromatography apparatus, and calculate the content.
2. Water extractives: Carry out the method for determination of water extractives (General rule 5006).
3. Dilute ethanol extractives: Carry out the method for determination of dilute ethanol-soluble extractives (General rule 5006).

Storage: Store in a cool and dry place and preserve in a well-closed container, and protect from moisture and insects.
Usage: Blood-regulating medicinal (Blood-activating and stasis-dispelling medicinal).
Dosage: 3~9 g.
Precaution and warning: Use cautiously for pregnant woman.

CARYOPHYLLI FLOS
丁香
Ding Sing / Ding Xiang
Clove

Clove is the dried flower bud of *Eugenia caryophyllata* Thunberg (Fam. Myrtaceae).
It contains not less than 16.0% (v/w) of clove oil.

Description: 10~17.5 mm in length, dark brown or dark red. Hypanthium rectangular prism, slightly compressed. Ovary 2-celled, axile placenta, ovules numerous. Sepals 4, fleshy. Corolla subglobular, petals 4, imbricated,

enclosing numerous stamens and one style. Odor, strongly aromatic; taste, pungent and numb. Sinking or upright in the water, oily after pressing.

Microscopic identification:

1. **Transverse section:**
   (1) Hypanthium (ovary): Epidermis composed of isodiametric sclerenchymatous cells, covered with extremely thick cuticle, with Ranunculaceae type stomata, numerous large oblong oil cavities scattered in the outer layer of parenchymatous tissue, about 200 μm in diameter. Vascular bundles scattered in the inner side of collenchymatous tissue, arranged in a ring. A few sclerenchymatous fibers and spiral vessels scattered among vascular bundles, the innermost layer of parenchymatous tissue chain mesh-shaped, intercellular spaces extremely numerous. Every layer of parenchymatous tissue and pith contains small clusters of calcium oxalate.
2. **Powder:** Dark brown. Fragments of parenchymatous tissue contain large elliptical oil cavities, small spiral vessels and a few fusiform fibers with thick walls, occasionally with crystal tissue. Clusters of calcium oxalate 10~15 μm in diameter, occasionally prism crystals are found. Walls of anther with particular reticular cells. Pollen grains extremely numerous, tetragonal, 15~20 μm in diameter.

Thin layer chromatographic identification test (General rule 1010.3):

1. Sample solution: Add 0.5 g of powdered sample to 5 mL of ethyl ether, shake for several minutes, filter and use the filtrate.
2. Reference drug solution: Use 0.5 g of the reference drug as the same method described above.
3. Reference standard solution: Weigh accurately a quantity of eugenol and dissolve in ethyl ether to produce a solution containing 16 μL per mL.
4. Procedure: Use silica gel F_{254} as the coating substance and a solution of petroleum ether (30~60 ℃) and ethyl acetate (9:1) as the developing solvent. Apply 5 μL of each of the above solutions to the plate. Once the top of the solvent rise to about 5~10 cm from the origin, remove the plate, dry in air. Spray with a 5% solution of vanillin in sulfuric acid (Vanillin/H_2SO_4 TS), heat at 105℃ until the spots become visible. The spots in the chromatogram obtained from the sample solution correspond in R_f values and color to the spots in the chromatogram obtained from the reference drug solution and reference standard solution.

Impurities and other requirements:

1. Total ash: Not more than 7.0% (General rule 5004).
2. Acid-insoluble ash: Not more than 1.0% (General rule 5004).
3. Foreign matter: Not more than 1.0%, except for pedicels (General rule 5003).

Assay:

1. Clove oil: Carry out the method for determination of volatile oil (General rule 5007).

Storage: Refrigerate and preserve in a well-closed container.
Usage: Wind-dispelling with aroma medicinal.
Dosage: 1~3 g.

CASSIAE SEMEN
決明子
Jyue Ming Zih / Jue Ming Zi
Cassia Seed

Cassia seed is the dried ripe seed of *Cassia obtusifolia* L. or *Cassia tora* L. (Fam. Leguminosae).
It contains not less than 10.0% of dilute ethanol-soluble extractives, not less than 10.0% of water extractives and not less than 0.20% of chrysophanol.

Description:

1. Seed of *Cassia obtusifolia*: Rhomboidal-cuboid or shortly cylindrical, one end even and oblique, the other end acuminate, horseshoe-like, 4~7 mm in length, 2~4 mm in width, relatively larger. Externally brown or blackish-brown, with an pale yellow dented line on each side of a rib, hilum pale yellow and dented at the center of one end, fracture grayish-white. Odor, slight; viscous on chewing.
2. Seed of *Cassia tora*: Flattened cylindrical, 3~5 mm in length, 2~3 mm in width, relatively small. Externally brownish-red or brown, with pale yellow bands on both sides of the rib, hilum white and dented at the center of one end.

Microscopic identification:

1. **Transverse section:**
   (1) Seed of *Cassia obtusifolia*: The outermost layer was 1 layer of thick cuticle, inner 1 row of palisade cells present, walls unevenly thickened, 2 light lines existed in 1/2 and lower 1/3 of the cells, respectively, inside showing 1 layer of brace cells, slightly dumbbell-shaped, walls thickened, cell boundary large. Nutritive layer composed of 6~8 rows of parenchymatous cells, containing clusters of calcium oxalate, 3~10 μm in diameter. Endotesta composed of 1 row of rectangular cells, arranged in order, containing prisms of calcium oxalate. Endosperm with walls unevenly thickened, containing clusters of calcium oxalate, oil droplets, aleurone granules, pigments and mucilage contents. Cotyledon cells contain

clusters of calcium oxalate, 3~10 μm in diameter.

(2) Seed of *Cassia tora*: The outermost layer was 1 layer of transparent cuticle, inner 1 row of palisade cells present with walls thickened, 1 layer of brace cells present under the palisade cells, slightly dumbbell-shaped, walls thickened, intercellular spaces large. Nutritive layer composed of 5~6 rows of parenchymatous cells, containing numerous clusters of calcium oxalate, 3~8 μm in diameter. Endotesta composed of 1 row of rectangular cells, arranged in order, containing crystals of calcium oxalate. Endosperm cells irregular, containing clusters of calcium oxalate, oil droplets, starch granules and pigments. Clusters of calcium oxalate relatively large, 3~10 μm in diameter.

2. **Powder:**

(1) Seed of *Cassia obtusifolia*: Brown. Cuticle layer 10~20 μm thick, transparent, containing sinuously reticulated patterns on the surface. Palisade cells with walls thickened and slightly shrunken, polygonal in surface view. Brace cells dumbbell-shaped in lateral view, subrounded in surface view, 25~50 μm in diameter, annularly thickened with 2 concentric circles. Parenchymatous cells of nutritive layer contain crystals of calcium oxalate, 3~10 μm in diameter. Endosperm cells with walls unevenly thickened and mucilaginous, containing clusters of calcium oxalate and aleurone granules. Cotyledon cells contain clusters of calcium oxalate, 10~25 μm in diameter.

(2) Seed of *Cassia tora*: Dark brown. Fragments of cuticle relatively rare, polygonal and with reticulated patterns on the surface. Brace cells with walls thickened on the outer part, some parts only with 1 layer of concentric circles in surface view, with curving and fine threads inside. Clusters of calcium oxalate 10~19 μm in diameter, prisms of calcium oxalate also present.

Thin layer chromatographic identification test (General rule 1010.3):

1. Sample solution: Add 1.0 g of powdered sample to 10 mL of methanol, immerse for 30 minutes, filter and evaporate the filtrate to dryness, dissolve the residue in 10 mL of water, add 1 mL of hydrochloric acid, place in a water bath for 30 minutes, cool immediately, extract twice each with 20 mL of ethyl ether, combine the ethyl ether extracts, evaporate to dryness, dissolve the residue in 1 mL of chloroform.
2. Reference drug solution: Use 1.0 g of the reference drug as the same method described above.
3. Reference standard solution: Weigh accurately a quantity of emodin and chrysophanol and dissolve in methanol to produce a solution containing 1.0 mg per mL of each.
4. Procedure: Use silica gel F_{254} as the coating substance and a solution of petroleum ether (30~60 ℃), ethyl formate and formic acid (15:5:1) as the developing solvent. Apply 5 μL of each of the above solutions to the plate. Once the top of the solvent rise to about 5~10 cm from the origin, dry in air. Examine under the ultraviolet light at 365 nm, fumigate in ammonia vapor, and examine under visible light. The spots in the chromatogram obtained from the sample solution correspond in R_f values and color to the spots in the chromatogram obtained from the reference drug solution and the reference standard solution.

Impurities and other requirements:

1. Loss on drying: Not more than 12.0% under heating at 105℃ for 5 hours (General rule 5008).
2. Total ash: Not more than 5.0% (General rule 5004).
3. Acid-insoluble ash: Not more than 2% (General rule 5004).

Assay:

1. Chrysophanol:

(1) Mobile phase: A solution of acetonitrile as the mobile phase A, and a solution of 0.1% phosphoric acid as the mobile phase B.

(2) Reference standard solution: Weigh accurately a quantity of chrysophanol and dissolve in a solution of absolute ethanol and ethyl acetate (2:1) to produce a solution containing 30 μg per mL.

(3) Sample solution: Weigh accurately 0.5 g of powdered sample, transfer to a conical flask with stopper, accurately add 50 mL of methanol and weigh, heat under reflux for 2 hours, cool, weigh again, replenish the loss of the weight with methanol, mix well, and filter. Measure accurately 25 mL of the successive filtrate and evaporate the filtrate to dryness. Add 30 mL of dilute hydrochloric acid to the filtrate. Place in a water bath for 1 hour and cool immediately. Extract the filtrate for four times with 30 mL of chloroform. Combine chloroform extracts, and evaporate to dryness. Dissolve the residue with a solution of absolute ethanol and ethyl acetate (2:1) to a 25-mL volumetric flask, add the same solvent to volume, mix well, filter and use the successive filtrate.

(4) Chromatographic system: The liquid chromatography is equipped with an ultraviolet absorption photometer (wavelength: 284 nm) and a column packed with octadecylsilanized silica gel. Program the chromatographic system as follows.

Time (min)	Mobile phase A (%)	Mobile phase B (%)
0~15	40	60
15~30	40→90	60→10
30~40	90	10

(5) Procedure: Inject accurately 10 μL of each of the reference standard solution and the sample solution into the liquid chromatography apparatus, and calculate the content.

2. Water extractives: Carry out the method for determination of water extractives (General rule 5006).
3. Dilute ethanol extractives: Carry out the method for determination of dilute ethanol-soluble extractives (General rule 5006).

Storage: Store in a cool and dry place, and protect from moisture.
Usage: Heat-clearing medicinal (Heat-clearing and fire-purging medicinal).
Dosage: 9~15 g.

CATECHU
兒茶
Er Cha / Er Cha
Catechu

Catechu is the dried evaporated decoction prepared from the peeled branch and stem of *Acacia catechu* (L. f.) Willd. (Fam. Leguminosae) or from twig with leaf of *Uncaria gambir* Roxb. (Fam. Rubiaceae).
It contains not less than 70.0% of dilute ethanol-soluble extractives, not less than 60.0% of water extractives and not less than 21.0% of the total amount of catechin and epicatechin.

Description: Irregular or square masses, externally reddish-brown or black, smooth and slightly lustrous. Texture hard, easily broken, fracture irregular, porous, lustrous, reddish-brown. Odor, slight; taste, astringent, bitter and then sweet.

Microscopic identification:
1. **Powder:** Brown. Raphides bundles and yellow contents present.

Thin layer chromatographic identification test (General rule 1010.3):
1. Sample solution: Add 0.5 g of powdered sample to 30 mL of ethyl ether, ultrasonicate for 10 minutes, filter, evaporate the filtrate to dryness, and dissolve the residue in 5 mL of methanol.
2. Reference drug solution: Use 0.5 g of the reference drug as the same method described above.
3. Reference standard solution: Weigh accurately 2 mg of catechin and epicatechin and dissolve in methanol to produce a 10 mL solution.
4. Procedure: Use silica gel plate with sodium carboxymethyl cellulose as the coating substance and a solution of *n*-butanol, acetic acid and water (3:2:1) as the developing solvent. Apply 5 μL of the sample solution and reference drug solution and 2 μL of the reference standard solution to the plate. Once the top of the solvent rise to about 5~10 cm from the origin, dry in air. Spray with a 10% solution of sulfuric acid in ethanol (H_2SO_4/EtOH TS), heat at 115℃ for 5 minutes until the spots become visible, and examine under visible light. The spots in the chromatogram obtained from the sample solution correspond in R_f values and color to the spots in the chromatogram obtained from the reference drug solution and the reference standard solution.

Impurities and other requirements:
1. Loss on drying: Not more than 14.0% under heating at 105℃ for 5 hours (General rule 5008).
2. Total ash: Not more than 5.0% (General rule 5004).
3. Acid-insoluble ash: Not more than 3.0% (General rule 5004).

Assay:
1. Catechin and epicatechin:
   (1) Mobile phase: A solution of water and acetonitrile (85:15).
   (2) Reference standard solution: Place catechin and epicatechin in a phosphorus oxide dryer for 12 hours, depressurize at 50℃. Weigh accurately a quantity of each and dissolve in a solution of methanol and water (1:1) to produce a solution containing 0.15 mg and 0.1 mg per mL of each.
   (3) Sample solution: Weigh accurately 20 mg of powdered sample in a 50-mL amber volumetric flask, add 40 mL of a solution of methanol and water (1:1), ultrasonicate for 20 minutes, dilute a solution of methanol and water to volume, mix well, filter and use the filtrate.
   (4) Chromatographic system: The liquid chromatography is equipped with an ultraviolet absorption photometer (wavelength: 280 nm) and a column packed with octadecylsilanized silica gel. The column temperature is maintained at room temperature. Inject reference standard solution into the liquid chromatography apparatus for five times, and record the peak areas. The relative standard deviation of the peak area of catechin and epicatechin should not be more than 1.5%.
   (5) Procedure: Inject accurately 10~20 μL of each of the reference standard solution and

the sample solution into the liquid chromatography apparatus, and calculate the content.

2. Water extractives: Carry out the method for determination of water extractives (General rule 5006).
3. Dilute ethanol extractives: Carry out the method for determination of dilute ethanol-soluble extractives (General rule 5006).

Storage: Store in a cool and dry place, and protect from moisture.
Usage: Astringent medicinal.
Dosage: 1~3 g.

CELOSIAE SEMEN
青葙子
Cing Siang Zih / Qing Xiang Zi
Feather Cockscomb Seed

Feather cockscomb seed is the dried ripe seed of *Celosia argentea* L. (Fam. Amaranthaceae).

Description: Oblate, relatively thick in the center, 1~1.5 mm in diameter, about 0.5 mm thick. Externally black or reddish-black, smooth, lustrous, with fine and reticulate wrinkles, a slightly dented hilum on the lateral side. Often with yellowish-white cap-shaped shell, apex with filamentous style, 4~5 mm in length. Testa thin and fragile, fracture white. Odor, slight; taste, weak.

Microscopic identification:

1. **Powder:** Blackish-gray. Epidermal cells of testa polygonal, 15~90 μm in diameter, dark reddish-brown, with reticular striations. Endotesta cells polygonal, 20~70 μm in diameter, pale yellow, filled with slender striations.

Impurities and other requirements:

1. Loss on drying: Not more than 13.0% under heating at 105℃ for 5 hours (General rule 5008).
2. Total ash: Not more than 8.0% (General rule 5004).
3. Acid-insoluble ash: Not more than 3.0% (General rule 5004).

Storage: Store in a cool and dry place, and protect from moisture.
Usage: Heat-clearing and fire-purging medicinal.
Dosage: 9~15 g.

CHAENOMELIS FRUCTUS
木瓜
Mu Gua / Mu Gua
Floweringquince Fruit

Floweringquince fruit is the dried ripe fruit of *Chaenomeles speciosa* (Sweet) Nakai (Fam. Rosaceae), commonly known as "Zhou Pi Mu Gua".
It contains not less than 25.0% of dilute ethanol-soluble extractives and not less than 20.0% of water extractives.

Description: Oblong, mostly in longitudinally halves, 4~9 cm in length, 2~5 cm in width, sarcocarp about 1 cm thick. Externally brownish-red or purplish-red, with irregular and deep wrinkles; edge of cut surface rolled inwards, sarcocarp pale reddish-brown, central with dented locules. Seed brownish-yellow, mostly fallen off. Texture hard. Odor, slight; taste, slightly sour and astringent.

Microscopic identification:

1. **Transverse section**: Stone cells layered exocarp of pericarp, composed of more than 10 layers of dense stone cells; stone cells polygonal or slightly extending, walls thickened, pit canals distinct. Walls of parenchymatous cells of mesocarp slightly thickened, scattered with small vascular bundles. Endocarp composed of several layers of flat sclerenchyma cells, some cells contain brown contents.
2. **Powder:** Dark reddish-brown. Stone cells colorless, pale yellow or orange-yellow, subrounded, subrectangular, strip-shaped, oblong, subtriangle or subsquare, 12~82 μm in diameter, up to 136 μm long, wall 5~20 μm thick, mostly with distinct striations, pit canals fine, some lumen contains brown or reddish-brown contents. Walls of parenchymatous cells of pericarp (original receptacle) slightly thickened, extreme shrunken, cell boundary indistinct, containing yellowish-brown or dark brown contents. Some fibers cross-overlapping in bundles, 11~27 μm in diameter, walls vary in thickness, lignified, usually with longitudinal clefts, lumen contains brown contents. Parenchymatous cells of mesocarp shrunken, pale yellow or brown. Epidermal cells of pericarp (original receptacle) subrectangular in sectional view, the outer wall 14~32 μm thick, cutinized, lumen contains reddish-brown contents. Reticulate and spiral vessels and pigment masses also exist.

Thin layer chromatographic identification test (General rule 1010.3):

1. Sample solution: Add 1.0 g of powdered sample to 10 mL of chloroform, ultrasonicate for 30 minutes, evaporate the filtrate to dryness, dissolve the residue in 2 mL mixture of methanol and chloroform (1:3).

2. Reference drug solution: Use 1.0 g of the reference drug as the same method described above.
3. Reference standard solution: Weigh accurately a quantity of ursolic acid and dissolve in methanol to produce a solution containing 0.5 mg per mL.
4. Procedure: Use silica gel F_{254} as the coating substance and a solution of cyclohexane, ethyl acetate, acetone and formic acid (6:0.5:1:0.1) as the developing solvent. Apply 1~2 μL of each of the above solutions to the plate. Once the top of the solvent rise to about 5~10 cm from the origin, dry in air. Spray with a 10% solution of sulfuric acid in ethanol (H_2SO_4/EtOH TS) and heat at 105℃ until the spots become visible. Examine under visible light and ultraviolet light at 365 nm. The spots in the chromatogram obtained from the sample solution correspond in R_f values and color to the spots in the chromatogram obtained from the reference drug solution and the reference standard solution.

Impurities and other requirements:
1. Loss on drying: Not more than 15.0% under heating at 105℃ for 5 hours (General rule 5008).
2. Total ash: Not more than 5.0% (General rule 5004).
3. Acid-insoluble ash: Not more than 1.0% (General rule 5004).

Assay:
1. Water extractives: Carry out the method for determination of water extractives (General rule 5006).
2. Dilute ethanol extractives: Carry out the method for determination of dilute ethanol-soluble extractives (General rule 5006).

Storage: Store in a ventilated and dry place or preserve in a dry and well-closed container, and protect from moisture and insects.
Usage: Wind-dampness-dispelling medicinal.
Dosage: 6~9 g.

CHEBULAE FRUCTUS
訶子
He Zih / He Zi
Medicine Terminalia Fruit

Medicine terminalia fruit is the dried ripe fruit of *Terminalia chebula* Retz. or *Terminalia chebula* Retz. var. *tomentella* Kurt. (Fam. Combretaceae).
It contains not less than 36.0% of dilute ethanol-soluble extractives and not less than 40.0% of water extractives.

Description: Ovate, 2~4 cm in length, 1.5~2 cm in diameter. Externally grayish-brown or yellowish-brown, slightly lustrous, scattered with 5~6 longitudinal ribs and irregular longitudinal wrinkles, base with a round scar of fruit stalk. Sarcocarp 0.2~0.4 cm thick, yellowish-brown; kernels obtuse round, yellowish-white, texture compact, containing pale yellow seeds. Odor, slight; taste, sour and astringent, then sweet.

Microscopic identification:
1. **Transverse section:**
   (1) Pericarp: Exocarp composed of 5~8 rows of sclerenchymatous cells, cells containing brown contents. Mesocarp composed of parenchymatous cells, sclerenchymatous cell ring and vascular bundles. Parenchymatous cells 2~5 rows, subrounded, containing relatively large oil droplets and clusters of calcium oxalate. Sclerenchymatous cell ring composed of numerous fiber-shaped sclerenchymatous cells arranging criss-cross, mostly elongated tangentially. Vascular bundles irregularly scattered.
2. **Powder:** Grayish-yellow. Vessels mainly pitted, about 60 μm in diameter. Stone cells in groups, about 15~50 μm in diameter, subrounded or rectangular. Fibers in bundles, criss-cross arranged, about 9~30 μm in diameter. Parenchymatous cells contain oil droplets and clusters of calcium oxalate.

Thin layer chromatographic identification test (General rule 1010.3):
1. Sample solution: Add 3.0 g of powdered sample to 10 mL of ethanol, ultrasonicate for 20 minutes, filter and use the filtrate.
2. Reference drug solution: Use 3.0 g of the reference drug as the same method described above.
3. Reference standard solution: Weigh accurately 5.0 mg of gallic acid and dissolve in ethanol to produce a 10 mL solution.
4. Procedure: Use silica gel F_{254} as the coating substance and a solution of toluene, glacial acetic acid and water (12:10:0.4) as the developing solvent. Apply 3 μL of each of the above solutions to the plate. Once the top of the solvent rise to about 5~10 cm from the origin, dry in air. Spray with a 2% solution of ferric chloride in ethanol ($FeCl_3$/EtOH TS). The spots in the chromatogram obtained from the sample solution correspond in R_f values and color to the spots in the chromatogram obtained with the reference drug solution and the reference standard solution.

Impurities and other requirements:
1. Loss on drying: Not more than 12.0% under heating at 105℃ for 5 hours (General rule 5008).
2. Total ash: Not more than 4.0% (General rule 5004).
3. Acid-insoluble ash: Not more than 1.0% (General rule 5004).

Assay:
1. Water extractives: Carry out the method for determination of water extractives (General rule

5006).

2. Dilute ethanol extractives: Carry out the method for determination of dilute ethanol-soluble extractives (General rule 5006).

Storage: Refrigerate or store in a cool and dry place, and protect from mold and insects.
Usage: Astringent medicinal.
Dosage: 3~9 g.

CHINENSIS GALLA
五倍子
Wu Bei Zih / Wu Bei Zi
Chinese Gall

Chinese gall is the galls produced mainly by parasitic aphids of *Melaphis chinensis* (Bell) Baker on the leaves of *Rhus chinensis* Mill., *Rhus potaninii* Maxim. or *Rhus punjabensis* Stew. var. *sinica* (Diels) Rehd. et Wils. (Fam. Anacardiaceae).
It contains not less than 47.0% of dilute ethanol-soluble extractives, not less than 40.0% of water extractives and not less than 50.0% of tannins.

Description:
According to the different shapes, separate into "Jiao Bei" and "Du Bei":

1. Jiao Bei: Rhombic, ovate or fusiform, 3~8 cm in length, 2~5 cm in diameter, commonly with several obtuse round branches. Externally grayish-yellow or pale yellowish-brown, with grayish-white soft and smooth tomentellate. Texture hard and fragile, hollow after broken, gall walls relatively thin, 1~2 mm thick, inner surface smooth, with black-brown killed aphids or black powdered aphid eggs, and 1~2 white silk, silk surface with numerous killed aphids, accompanied by white cream powder or crystalline wax-like material in the inner surface. Odor, special; taste, astringent.
2. Du Bei: Long round or fusiform, slightly flat, no branches. Externally dark gray yellowish-green, with numerous longitudinal striations, less tomentellate; gall walls about 3 mm thick.

Thin layer chromatographic identification test (General rule 1010.3):

1. Sample solution: Add 0.2 g of powdered sample to 5 mL of methanol, ultrasonicate for 15 minutes, filter and use the filtrate.
2. Reference drug solution: Use 0.2 g of the reference drug as the same method described above.
3. Reference standard solution: Weigh accurately a quantity of gallic acid and dissolve in methanol to produce a solution containing 1.0 mg per mL.
4. Procedure: Use silica gel F_{254} as the coating substance and a solution of dichloromethane, ethyl acetate and formic acid (5:5:1) as the developing solvent. Apply 2 μL of each of the above solutions to the plate. Once the top of the solvent rise to about 5~10 cm from the origin, dry in air. Examine under ultraviolet light at 254 nm. The spots in the chromatogram obtained from the sample solution correspond in R_f values and color to the spots in the chromatogram obtained from the reference drug solution and reference standard solution.

Impurities and other requirements:

1. Loss on drying: Not more than 14.0% under heating at 105℃ for 5 hours (General rule 5008).
2. Total ash: Not more than 3.5% (General rule 5004).
3. Acid-insoluble ash: Not more than 1.0% (General rule 5004).

Assay:

1. Water extractives: Carry out the method for determination of water extractives (General rule 5006).
2. Dilute ethanol extractives: Carry out the method for determination of dilute ethanol-soluble extractives (General rule 5006).
3. Tannins:
   (1) Sample solution: Weigh accurately 2.0 g of powdered sample, transfer to a conical flask, add 150 mL of water, place in a water bath for 30 minutes, cool and transfer to 250-mL volumetric flask, add water to volume, filter and use the filtrate.
   (2) Determination of total water soluble portion: Weigh accurately 25 mL of the sample solution, evaporate to dryness, take the residue under heating at 105℃ for 3 hours, weighed (T_1).
   (3) Determination of water soluble portion not combining with gelatin powder: Weigh accurately 100 mL of the sample solution, add 6.0 g of gelatin powder, shake for 15 minutes, filter, weigh accurately 25 mL of the filtrate, evaporate to dryness, take the residue under heating at 105℃ for 3 hours, weighed (T_2).
   (4) Determination of water soluble portion combining with gelatin powder: Weigh accurately 100 mL of water, add 6.0 g of gelatin powder, shake for 15 minutes, filter, weigh accurately 25 mL of the filtrate, evaporate to dryness, take the residue under heating at 105℃ for 3 hours, weighed (T_0).
   (5) Calculate the content of tannins as following formula:

$$\text{Content of tannins (\%)} = \frac{(T_1 - T_2 + T_0)\times 10}{W}\times 100$$

W is the weight of the sample taken (g).

Storage: Refrigerate or store in a cool and dry place, and protect from crush.
Usage: Astringent medicinal.

Dosage: 3~6 g, used an appropriate amount for external use.

CHRYSANTHEMI FLOS
菊花
Jyu Hua / Ju Hua
Chrysanthemum Flower

Chrysanthemum flower is the dried capitulum of *Chrysanthemum morifolium* (Ramat.) Tzvel. (Fam. Compositae). It is classified into "Bo Jyu", "Chu Jyu", "Gong Jyu" and "Hang Jyu" according to different localities and variations in processing methods.
It contains not less than 22.0% of dilute ethanol-soluble extractives, not less than 22.0% of water extractives, not less than 0.1% (v/v) of volatile oil, not less than 0.20% of chlorogenic acid and not less than 0.08% of luteolin-7-*O*-glucoside.

Description:
1. Bo Jyu: Obconical or cylindrical, 1.5~3 cm in diameter. Involucre dish-shaped; bracts 3~4 layers, ovate or elliptical, yellowish-green or brownish-green, the outer surface covered with white hairs, margin membranous. Receptacle hemispheroidal. Ligulate florets in the outer, several rows, female, whitish or pale yellowish-white, strongly straight and upward, longitudinally folded and wrinkled, scattered with golden glandular spots; tubular florets abundant, hermaphrodite, occurring in the center, concealed by the ligulate florets, yellow, with 5 terminal teeth. Achenes undeveloped, pappus absent. Texture light and soft, lax and fragile when dried. Odor, aromatic; taste, sweet and slightly bitter.
2. Chu Jyu: Relatively small, irregularly spheroidal or oblate, 1~1.5 cm in diameter; ligulate florets whitish, 1.5 cm in length, about 3 mm in width, irregularly twisted, curved inward, margin wrinkled, sometimes scattered with pale brown glandular spots; tubular florets mostly concealed; base scales indistinct. Texture soft. Odor, aromatic.
3. Gong Jyu: Oblate or irregularly spheroidal, 1.5~2.5 cm in diameter; ligulate florets white or whitish, obliquely upward, the upper part folded outward, margin slightly curved inward and wrinkled, glandular spots usually absent; tubular florets few, exposed; base scales extremely less.
4. Hang Jyu: Dish-shaped or oblate, 2.5~4 cm in diameter; ligulate florets whitish or yellow, spread flatly or folded slightly, agglutinated to each other, glandular spots usually absent; tubular florets abundant, exposed; base scales indistinct Texture soft.

Microscopic identification:
1. **Powder:** Pale yellow. Pollen grains yellow, subspheroidal, outer walls relatively thickened, with thick protuberance, 3~7 μm in length, with 3 germinal pores. T-shaped hairs mostly broken, apical cells long and large, 375~525 μm in length, 30~40 μm in diameter, basal cells relatively small, 2~5. Glandular hairs without stalk paramecium-like, 4- to 6-celled, arranged in pairs, covered with cuticle. Epidermal cells of corolla with anticlinal walls sinuous, periclinal walls with fine and radial striations; epidermal cells of bracts slender, anticlinal walls sinuous, periclinal walls with thick striations. Cell walls in inner walls of pollen sac reticulate or strip-shaped thickened.

Thin layer chromatographic identification test (General rule 1010.3):
1. Chlorogenic acid:
   (1) Sample solution: Add 1.0 g of small pieces sample to 20 mL of petroleum ether (30~60 ℃), ultrasonicate for 10 minutes, discard the petroleum ether, evaporate the residue to dryness, add 1 mL dilute hydrochloric acid and 50 mL of ethyl acetate, ultrasonicate for 30 minutes, filter and evaporate the filtrate to dryness, dissolve the residue in 2 mL of methanol.
   (2) Reference drug solution: Use 1.0 g of the reference drug as the same method described above.
   (3) Reference standard solution: Weigh accurately a quantity of chlorogenic acid and dissolve in methanol to produce a solution containing 0.5 mg per mL.
   (4) Procedure: Use polyamide as the coating substance and the supernatant of toluene, ethyl acetate, formic acid, glacial acetic acid and water (1:15:1:1:2) as the developing solvent. Apply 0.5~1 μL of each of the above solutions to the plate. Once the top of the solvent rise to about 5~10 cm from the origin, dry in air. Examine under the ultraviolet light at 365 nm. The spots in the chromatogram obtained from the sample solution correspond in R_f values and color to the spots in the chromatogram obtained with the reference drug solution and the reference standard solution.
2. Reference drug:
   (1) Sample solution: Add 1.0 g of small pieces sample to 15 mL of methanol, ultrasonicate for 30 minutes, filter and use the filtrate.
   (2) Reference drug solution: Use 1.0 g of the reference drug as the same method described above.
   (3) Procedure: Use silica gel F_{254} as the coating substance and a solution of toluene, ethyl acetate and methanol (8:1:1) as the developing solvent. Apply 10 μL of each of the above solutions to the plate. Once the top of the solvent rise to about 5~10 cm from the origin, dry in air. Spray with a 20% solution of sulfuric acid and heat at 105℃ until the

spots become visible. The spots in the chromatogram obtained from the sample solution correspond in R_f values and color to the spots in the chromatogram obtained from the reference drug solution.

Impurities and other requirements:

1. Total ash: Not more than 10.0% (General rule 5004).
2. Acid-insoluble ash: Not more than 2.0% (General rule 5004).

Assay:

1. Chlorogenic acid and luteolin-7-*O*-glucoside:
   (1) Mobile phase: A solution of acetonitrile as the mobile phase A, and a solution of 0.1% phosphoric acid as the mobile phase B.
   (2) Reference standard solution: Weigh accurately a quantity of chlorogenic acid and luteolin-7-*O*-glucoside and dissolve in 70% methanol to produce a solution containing 35 μg and 25 μg per mL of each. (store at a temperature below 10℃)
   (3) Sample solution: Weigh accurately 0.25 g of the powdered sample, transfer to a conical flask with stopper, accurately add 25 mL of 70% methanol, stopper tightly and weigh, ultrasonicate for 40 minutes, cool, weigh again, replenish the loss of the weight with 70% methanol, mix well, filter and use the filtrate.
   (4) Chromatographic system: The liquid chromatography is equipped with an ultraviolet absorption photometer (wavelength: 348 nm) and a column packed with octadecylsilanized silica gel.

Time (min)	Mobile phase A (%)	Mobile phase B (%)
0~11	10→18	90→82
11~30	18→20	82→80
30~40	20	80

   (5) Procedure: Inject accurately 5 μL of each of the reference standard solution and the sample solution into the liquid chromatography apparatus, and calculate the content.
2. Water extractives: Carry out the method for determination of water extractives (General rule 5006).
3. Dilute ethanol extractives: Carry out the method for determination of dilute ethanol-soluble extractives (General rule 5006).
4. Volatile oil: Carry out the method for determination of volatile oil (General rule 5007).

Storage: Refrigerate or store in a cool and dry place.
Usage: Exterior-releasing medicinal (Wind-heat dispersing medicinal).
Dosage: 5~9 g.

CHUANXIONG RHIZOMA
芎藭
Cyong Cyong / Qiong Qiong
Chuanxiong Rhizome

Chuanxiong rhizome is the dried rhizome of *Ligusticum chuanxiong* Hortorum (Fam. Umbelliferae), commonly known as "Chuan Qiong".
It contains not less than 25.0% of dilute ethanol-soluble extractives, not less than 29.0% of water extractives and not less than 0.07% of ferulic acid.

Description: Irregular knotty and fist-like, 3~10 cm in length, 2~7 cm in diameter. Externally yellowish-brown, rough and shrunken, with many parallel and protuberant annulations, apex with dent and subrounded stem scar, the lower part and the nodes with numerous tuberculous rootlet scars. Texture compact, uneasily broken, fracture yellowish-white or grayish-yellow, cambium in an undulate ring, scattered with yellowish-brown oil dots. Odor, strongly aromatic; taste, bitter, pungent and slight numb then sweet.

Microscopic identification:

1. **Transverse section:** Cork composed of over 10 layers flat cells. Cortex narrow, scattered with root-trace vascular bundles, cells tangentially elongated, with subrounded oil cavities, up to 200 μm in diameter. Phloem relatively broad, sieve tube groups scattered. Undulate cambium in a ring. Xylem vessels arranged in a U shape, vessels polygonal or subrounded; xylem fiber bundles occasionally found. Pith relatively broad, numerous oil cavities scattered in parenchymatous tissue; parenchymatous cells contain starch granules, some containing clusters of calcium oxalate.
2. **Powder:** Pale yellowish-brown. Starch granules numerous, simple granules subrounded, long-rounded, oval or reniform, 5~16 μm in diameter, up to about 30 μm in length, hilum dotted or strip-shaped, a few V-shaped, striations indistinct; compound granules rare, composed of 2~4 components. Cork cells abundant, dark yellow, polygonal or rectangular, walls extremely thin and slightly undulate. Clusters of calcium oxalate about 20 μm in diameter. Vessels spiral and reticulate, occasionally scalariform and bordered-pitted, 8~10 μm in diameter. Xylem fibers long-fusiform, 112~370 μm in length, 16~27 μm in diameter, pits and pit canals relatively fine, lumen relatively broad. Oil cavities mostly broken, occasionally filled with oil droplets.

Thin layer chromatographic identification test (General rule 1010.3):

1. Sample solution: Take 1.0 g of powdered sample to a round-bottom flask, add 10 mL of methanol, heat under reflux for 30 minutes, cool, filter and make up the filtrate to 10 mL.
2. Reference drug solution: Use 1.0 g of the reference drug as the same method described above.
3. Reference standard solution: Weigh accurately 1.0 mg of ferulic acid and dissolve in 1 mL of methanol to produce a solution containing 1.0 mg per mL.
4. Procedure: Use silica gel F_{254} as the coating substance and a solution of ethyl acetate, methanol and water (8:2:1) as the developing solvent. Apply 5 μL of each of the above solutions to the plate. Once the top of the solvent rise to about 5~10 cm from the origin, dry in air. Examine under the ultraviolet light at 365 nm. The spots in the chromatogram obtained from the sample solution correspond in R_f values and color to the spots in the chromatogram obtained from the reference drug solution and the reference standard solution.

Impurities and other requirements:

1. Loss on drying: Not more than 15.0% under heating at 105℃ for 5 hours (General rule 5008).
2. Total ash: Not more than 6.0% (General rule 5004).
3. Acid-insoluble ash: Not more than 1.0% (General rule 5004).
4. Total heavy metals: Not more than 10.0 ppm (General rule 3005).
5. Arsenic (As): Not more than 5.0 ppm (General rule 3006, 3049, 3050).

Assay:

1. Ferulic acid:
   (1) Mobile phase: A solution of methanol and 5% acetic acid (25:75). The ratio varies as required.
   (2) Reference standard solution: Weigh accurately a quantity of ferulic acid and dissolve in methanol to produce a solution containing 10 μg per mL.
   (3) Sample solution: Weigh accurately 1.0 g of powdered sample, add 30 mL of a solution of methanol and formic acid (95:5), shake disconnectedly, and stand for overnight. Weigh accurately 10 mL of the supernatant in a separatory funnel, extract twice by shaking with ethyl acetate (15 mL and 10 mL), combine all the extracts, evaporate the extracts to dryness in a water bath, and dissolve the residue in methanol to 20 mL.
   (4) Chromatographic system: The liquid chromatography is equipped with an ultraviolet absorption photometer (wavelength: 320 nm) and a column (4~6 mm × 15~25 cm) packed with octadecylsilanized silica gel. The column temperature is maintained at room temperature. The flow rate is about 1.0 mL/min.
   (5) Procedure: Inject accurately 10 μL of each of the reference standard solution and the sample solution into the liquid chromatography apparatus, and calculate the content.
2. Water extractives: Carry out the method for determination of water extractives (General rule 5006).
3. Dilute ethanol extractives: Carry out the method for determination of dilute ethanol-soluble extractives (General rule 5006).

Storage: Refrigerate or store in a cool and dry place, and protect from insects.
Usage: Blood-regulating medicinal (Blood-activating and stasis-dispelling medicinal).
Dosage: 3~10 g.

CIBOTII RHIZOMA
狗脊
Gou Ji / Gou Ji
East Asian Tree Fern Rhizome

East Asian tree fern rhizome is the dried rhizome of *Cibotium barometz* (L.) J. Smith (Fam. Dicksoniaceae). It contains not less than 18.0% of dilute ethanol-soluble extractives, not less than 18.0% of water extractives and not less than 0.02% of protocatechuic acid.

Description: Irregularly long lump-shaped, about 10~18 cm in length, about 3~10 cm in diameter. Externally brown, covered with golden hairs; the upper part exhibiting several reddish-brown petioles and the lower part remained with black fibrous roots. Texture hard, uneasily broken. Odorless; taste, slightly astringent.

1. Sheng Gou Ji Pian: Irregular oblong, margin irregular, occasionally remained with golden and soft hairs, about 2~5 mm thick, externally dark brown, fracture yellowish-brown, with yellow protuberant ring at the edge. Texture fragile, easily broken, starchy.
2. Shu Gou Ji Pian: Blackish-brown, similar to Shebggoujipian. Texture hard. Odorless; taste, weak.

Microscopic identification:

1. **Transverse section:** Epidermis composed of 1 row of cells, with remains of golden non-glandular hairs. Sclerenchymatous cells 10~20 rows, cells subrounded or subpolygonal, yellowish-brown, with distinct pits, containing starch granules. Xylem composed of several rows of cells, arranged in a ring, both the inner and outer parts exhibiting phloem and endodermis; both the inner and outer cortex and pith relatively broad, composed of parenchymatous cells,

cells filled with starch granules, occasionally containing yellowish-brown contents.

2. **Powder:** Yellowish-brown. Golden non-glandular hairs about 100~700 μm in length, mostly broken. Starch granules abundant, simple granules spheroidal, long-rounded or reniform, varying in size, hilum distinct, large granules with distinct striations; compound granules composed of 2~3 components, but rarely present. Parenchymatous cells contain yellowish-brown and reddish-brown masses. Vessels mainly scalariform, about 20~100 μm in diameter.

Thin layer chromatographic identification test (General rule 1010.3):

1. Sample solution: Add 2.0 g of powdered sample to 40 mL of methanol, ultrasonicate for 1 hour, evaporate to dryness, and dissolve the residue in 1 mL of methanol.
2. Reference drug solution: Use 2.0 g of the reference drug as the same method described above.
3. Reference standard solution: Weigh accurately a quantity of protocatechuic aldehyde and protocatechuic acid in methanol to produce a solution containing 1.0 mg per mL of each.
4. Procedure: Use silica gel F_{254} as the coating substance and a solution of chloroform, ethyl acetate, toluene and formic acid (5:6:3:1) as the developing solvent. Apply 5~10 μL of the sample solution and reference drug solution and 2 μL of the reference standard solution to the plate. Once the top of the solvent rise to about 5~10 cm from the origin, dry in air. Spray with a 5% solution of ferric chloride in ethanol ($FeCl_3$/EtOH TS), heat at 105℃ for 5 minutes until the spots become visible. The spots in the chromatogram obtained from the sample solution correspond in R_f values and color to the spots in the chromatogram obtained from the reference drug solution and the reference standard solution.

Impurities and other requirements:

1. Loss on drying: Not more than 13.0% under heating at 105℃ for 5 hours (General rule 5008).
2. Total ash: Not more than 3.0% (General rule 5004).
3. Acid-insoluble ash: Not more than 1.0% (General rule 5004).

Assay:

1. Protocatechuic acid:
   (1) Mobile phase: A solution of acetonitrile and 1% glacial acetic acid (5:95). The ratio varies as required.
   (2) Reference standard solution: Weigh accurately a quantity of protocatechuic acid and dissolve in a solution of methanol and 1% glacial acetic acid (70:30) to produce a solution containing 50 μg per mL.
   (3) Sample solution: Weigh accurately 1.0 g of powdered sample, transfer to a conical flask with stopper, add accurately 25 mL of a solution of methanol and 1% glacial acetic acid (70:30), weigh, ultrasonicate for 30 minutes, cool, weigh again, replenish the loss of the weight with a solution of methanol and 1% glacial acetic acid (70:30), mix well, filter and use the successive filtrate.
   (4) Chromatographic system: The liquid chromatography is equipped with an ultraviolet absorption photometer (wavelength: 260 nm) and a column packed with octadecylsilanized silica gel. The number of theoretical plates of the peak of protocatechuic acid should not be less than 3,000.
   (5) Procedure: Inject accurately 10 μL of each of the reference standard solution and the sample solution into the liquid chromatography apparatus, and calculate the content.
2. Water extractives: Carry out the method for determination of water extractives (General rule 5006).
3. Dilute ethanol extractives: Carry out the method for determination of dilute ethanol-soluble extractives (General rule 5006).

Storage: Refrigerate or store in a cool and dry place, and protect from mold and insects.
Usage: Tonifying and replenishing medicinal (Yang-tonifying medicinal).
Dosage: 6~12 g.

CICADAE PERIOSTRACUM
蟬蛻
Chan Tuei / Chan Tui
Cicada Exuviae

Cicada exuviae is the dried exuviae of nymphs of *Cryptotympana pustulata* Fabricius (Fam. Cicadidae) during emergence.

Description: Cicada-shape, hollowed and curved, 2~4 cm in length, 1.5~2 cm in width. Externally yellowish-brown, translucent, lustrous. The head with a pair of filiform antenna, usually dropped; compound eye prominent; the anterior end of the frons prominent; mouth and snout developed, labrum short and wide, labium extended into a tube. The dorsal surface of the thorax crisscross split, split margins curved inward; each side of the dorsum bearing two small wings; the prothorax bearing with the first pair of legs, legs swollen and the lower part with spines forming fossorial legs. The abdomen obtuse rounded, 9 segments, bearing three pairs of legs, covered with yellowish-brown minute hairs, 9th segment triangular-shaped and obtuse. Texture light and membranous, easily broken. Odorless; taste, weak.

Microscopic identification:

1. **Powder:** Yellowish-brown. Fragments of body wall yellowish-brown, subsquare or irregular, densely covered with papillary protuberance, setae scars visible; some fragments only with setae scars on the surface; some only with papillary protuberance on the surface. Setae varying in length, mostly yellowish-brown or reddish-brown, 15~23 μm in length, trichopore obviously visible, slightly double circles shaped. Tracheal walls mostly broken, annular or flaky, colorless, annular striations fine and dense, spiral filaments arranged arc-shaped.

Thin layer chromatographic identification test (General rule 1010.3):

1. Sample solution: Add 1.0 g of powdered sample to 10 mL of methanol, ultrasonicate for 30 minutes, filter, evaporate the filtrate to dryness, and dissolve the residue in 1 mL of methanol.
2. Reference drug solution: Use 1.0 g of the reference drug as the same method described above.
3. Procedure: Use silica gel F_{254} as the coating substance and the lower layer of a solution of dichloromethane, methanol and water (13:7:2) refrigerate below 6℃ for not less than 10 hours as the developing solvent. Apply 10 μL of each of the above solutions to the plate. Once the top of the solvent rise to about 5~10 cm from the origin, dry in air. Spray with a 10% solution of phosphomolybdic acid in ethanol (Phosphomolybdic Acid/EtOH TS) and heat at 105 ℃ until the spots become visible. Examine under the visible light. The spots in the chromatogram obtained from the sample solution correspond in R_f values and color to the spots in the chromatogram obtained from the reference drug solution.

Impurities and other requirements:

1. Loss on drying: Not more than 10.0% under heating at 105℃ for 5 hours (General rule 5008).
2. Total ash: Not more than 33.0% (General rule 5004).
3. Acid-insoluble ash: Not more than 26.0% (General rule 5004).

Storage: Store in a dry place, and protect from crush.
Usage: Pungent-cold exterior-releasing medicinal.
Dosage: 3~6 g.
Precaution and warning: Used with caution in pregnancy.

CIMICIFUGAE RHIZOMA
升麻
Sheng Ma / Sheng Ma
Largetrifolious Bugbane Rhizome

Largetrifolious bugbane rhizome is the dried rhizome of *Cimicifuga foetida* L., *Cimicifuga heracleifolia* Komar. or *Cimicifuga dahurica* (Turcz.) Maxim. (Fam. Ranunculaceae).
It contains not less than 19.0% of dilute ethanol-soluble extractives and not less than 14.0% of water extractives.

Description: Irregular masses, frequently branched, about 10~20 cm in length, 2~4 cm in diameter. Externally blackish-brown, rough, remained with numerous wiry fibrous roots, the upper part remained with several larger subround and hollow stems base, the inner wall of the hole with reticulate furrows, the lower part lumpy, with fibrous root scars. Texture hard and light, uneasily broken, fracture uneven, pale yellow or yellowish-green, cracked, fibrous. Odor, slight; taste, slightly bitter.

Microscopic identification:

1. **Transverse section:** Metaderm composed of 1~3 rows of cells, subpolygonal in shape, walls vary in thickness, some outer walls thickened by suberization, and occasionally the outer and anticlinal wall of some metaderm cells nipple-shaped thickened, and stretched into the cell cavities. Cortex relatively broad; pericycle scattered with collateral vascular bundles, fiber bundles arranged in an interrupted ring. Phloem radially elongated in neat. Cambium indistinct. Xylem broad, vessels relatively numerous, singly scattered or in groups of 2~7 cells, rays in 2 or more cell row. Pith broad. Parenchymatous cells contain starch granules.
2. **Powder:** Yellowish-brown. Vessels mainly bordered-pitted, also have reticulate, scalariform and spiral, 7~100 μm in diameter. Pericycle fiber bundles fusiform, mostly straight, with the endings acuminate or obtusely rounded, 15~35 μm in diameter, walls slightly thickened and lignified, pits distinct. Simple starch granules spheroid, oblong or reniform, 8~20 μm in diameter, with distinct hilum; compound granules relatively numerous, composed of 2~14 components.

Thin layer chromatographic identification test (General rule 1010.3):

1. Sample solution: Add 1.0 g of powdered sample to 10 mL of methanol, heat under reflux for 30 minutes, filter and use the filtrate.
2. Reference drug solution: Use 1.0 g of the reference drug as the same method described above.
3. Reference standard solution: Weigh accurately a quantity of ferulic acid and isoferulic acid and dissolve in ethanol to produce a solution containing 1.0 mg per mL of each.
4. Procedure: Use silica gel F_{254} as the coating substance and a solution of toluene, dichloromethane and glacial acetic acid (6:1:0.5) as the developing solvent. Apply 5 μL of each of the above solutions to the plate. Once the top of the solvent rise to about 5~10 cm from the origin, dry in air. Examine under ultraviolet light at 365 nm.

The spots in the chromatogram obtained from the sample solution correspond in R_f values and color to the spots in the chromatogram obtained from the reference drug solution and the reference standard solution.

Impurities and other requirements:

1. Loss on drying: Not more than 13.0% under heating at 105℃ for 5 hours (General rule 5008).
2. Total ash: Not more than 12.0% (General rule 5004).
3. Acid-insoluble ash: Not more than 3.0% (General rule 5004).
4. Total heavy metals: Not more than 10.0 ppm (General rule 3005).
5. Arsenic (As): Not more than 5.0 ppm (General rule 3006, 3049, 3050).

Assay:

1. Water extractives: Carry out the method for determination of water extractives (General rule 5006).
2. Dilute ethanol extractives: Carry out the method for determination of dilute ethanol-soluble extractives (General rule 5006).

Storage: Refrigerate or store in a cool and dry place, and protect from mold and insects.
Usage: Pungent-cold exterior-releasing medicinal.
Dosage: 3~9 g.

CINNAMOMI CORTEX
肉桂
Rou Guei / Rou Gui
Cinnamon Bark

Cinnamon bark is the dried bark of trunk of *Cinnamomum cassia* Presl (Fam. Lauraceae). It is commonly known as "Gui Pi".
It contains not less than 1.0% (v/w) of volatile oil.

Description: Quilled or semi-quilled, 1~3 mm in width. Outer surface grayish-brown or brown, with some cork, inner surface brown or pale reddish-brown. Fracture even, granularity. Odor, strongly aromatic; taste, pungent and slight astringent.

Microscopic identification:

1. **Transverse section:** Cork composed of several layers of cells, the cells of innermost layer with thickened and lignified walls. Parenchymatous cells of cortex contain starch granules, also scattered with stone cells, mucilage cells and oil cells. Stone cell layers arranged in an interrupted ring, containing inner sheath fiber groups with walls thickened and slightly lignified. Phloem broad, mainly composed of parenchymatous cells, scattered with small sieve tubes, phloem fibers scattered in singly or aggregated in groups, numerous mucilage cells and oil cells. Phloem rays arranged radially, 1~3 rows of cells wide, containing starch granules or fine raphides of calcium oxalate. Parenchymatous cells usually contain starch granules or fine raphides of calcium oxalate; raphides mostly distributed in phloem rays. In lumen of parenchymatous cells, stone cells and fibers filled with non-crystalline reddish-brown contents, mostly insoluble in general solvents.
2. **Powder:** Yellowish-brown or reddish-brown. Simple granules 5~15 μm in diameter, mostly above 10 μm; compound granules composed of 2~4 components. Stone cells slightly lignified, varying in shape, lumen occasionally containing starch granules. Fibers slightly lignified, walls extremely thickened and slightly undulated, 300~1500 μm in length. Walls of parenchymatous cells reddish-brown. Elongated mucilage cells contain volatile oil or mucilage contents. Ray cells contain fine raphides of calcium oxalate. Cork cell fragments slightly lignified.

Thin layer chromatographic identification test (General rule 1010.3):

1. Sample solution: Add 2.0 g of powdered sample to 10 mL of ethyl ether, shake for 3 minutes, filter and use 10 μL of the filtrate.
2. Reference drug solution: Use 2.0 g of the reference drug as the same method described above.
3. Reference standard solution: Weigh accurately 0.1 mL of cinnamaldehyde and dissolve in 10 mL of ethyl ether to produce a solution.
4. Procedure: Use silica gel F_{254} as the coating substance and a solution of *n*-hexane, chloroform and ethyl acetate (4:1:1) as the developing solvent. Apply 10 μL of each of the above solutions to the plate. Once the top of the solvent rise to about 5~10 cm from the origin, dry in air. Examine under the ultraviolet light at 254 nm. The spots in the chromatogram obtained from the sample solution correspond in R_f values and color to the spots in the chromatogram obtained from the reference drug solution and reference standard solution. Spray with a solution of 2,4-dinitrophenyl-hydrazine, the color of spots change to orange-yellow.

Impurities and other requirements:

1. Acid-insoluble ash: Not more than 2.0% (General rule 5004).
2. Foreign matter: Not more than 2.0% (General rule 5003).
3. Cadmium (Cd): Not more than 2.0 ppm (General rule 3049, 3050).
4. Lead (Pb): Not more than 30.0 ppm (General rule 3007, 3049, 3050).
5. Mercury (Hg): Not more than 2.0 ppm (General rule 3049).

6. Pesticide residues:
   (1) The total DDT content: Not more than 0.2 ppm (General rule 3052).
   (2) The total BHC content: Not more than 0.2 ppm (General rule 3052).

Assay:
1. Volatile oil: Carry out the method for determination of volatile oil (General rule 5007).

Storage: Refrigerate and preserve in a well-closed container.
Usage: Flavoring agent, wind-dispelling with aroma medicinal, stomach-invigorating medicinal.
Dosage: 1 g.

CINNAMOMI RAMULUS
桂枝
Guei Jhih / Gui Zhi
Cassia Twig

Cassia twig is the dried twig of *Cinnamomum cassia* Presl (Fam. Lauraceae).
It contains not less than 4.0% of dilute ethanol-soluble extractives and not less than 2.0% of water extractives.

Description: Long cylindrical, branched, 30~70 cm in length, 0.3~1 cm in diameter at the thick end. Externally brown or reddish-brown, with fine wrinkles and swellings of leaf scars, branch scars and bud scars, lenticels dotted or dotted-elliptical. Texture hard and fragile, easily broken, fracture of bark reddish-brown, with a pale yellow ring of stone cells, wood yellowish-white to pale yellowish-brown, pith subsquare. Odor, characteristically aromatic; taste, sweet and slightly pungent, relatively strong at bark. The better character as consistent diameter, reddish-brown, strongly aromatic.

Microscopic identification:
1. **Transverse section:** Epidermis composed of 1 row of rectangular or subsquare cells, unicellular non-glandular hairs present in twig. Cork composed of 3~5 rows of cells, cells of the innermost layer with thickened outer wall. Cortex scattered with oil cells and stone cells. Stone cell groups in pericycle arranged in an interrupted ring, accompanied by fiber bundles. Phloem scattered with oil cells, mucilage cells and fibers. Cambium distinct. Xylem rays 1~2 rows of cells wide, containing brown contents and fine raphides of calcium oxalate. Pith with slightly thickened and lignified cell wall. Parenchymatous cells contain starch granules.

Thin layer chromatographic identification test (General rule 1010.3):
1. Sample solution: Add 1.0 g of powdered sample to 10 mL of methanol, ultrasonicate for 30 minutes, cool and make up to 10 mL.
2. Reference drug solution: Use 1.0 g of the reference drug as the same method described above.
3. Reference standard solution: Weigh accurately a quantity of cinnamic acid and dissolve in ethanol to produce a solution containing 1.0 mg per mL.
4. Procedure: Use silica gel F_{254} as the coating substance and a solution of *n*-hexane and acetone (4:1) as the developing solvent. Apply 5 μL of each of the above solutions to the plate. Once the top of the solvent rise to about 5~10 cm from the origin, dry in air. Examine under the ultraviolet light at 254 nm. The spots in the chromatogram obtained from the sample solution correspond in R_f values and color to the spots in the chromatogram obtained from the reference drug solution and the reference standard solution.

Impurities and other requirements:
1. Loss on drying: Not more than 12.0% under heating at 105℃ for 5 hours (General rule 5008).
2. Total ash: Not more than 3.0% (General rule 5004).
3. Acid-insoluble ash: Not more than 1.0% (General rule 5004).
4. Cadmium (Cd): Not more than 2.0 ppm (General rule 3049, 3050).
5. Lead (Pb): Not more than 30.0 ppm (General rule 3007, 3049, 3050).
6. Mercury (Hg): Not more than 2.0 ppm (General rule 3049).
7. Pesticide residues:
   (1) The total DDT content: Not more than 0.2 ppm (General rule 3052).
   (2) The total BHC content: Not more than 0.2 ppm (General rule 3052).

Assay:
1. Water extractives: Carry out the method for determination of water extractives (General rule 5006).
2. Dilute ethanol extractives: Carry out the method for determination of dilute ethanol-soluble extractives (General rule 5006).

Storage: Store in a cool and dry place, and protect from insects.
Usage: Pungent-warm exterior-releasing medicinal.
Dosage: 3~9 g.

CIRSII HERBA
小蓟
Siao Ji / Xiao Ji
Common Cephalanoplos Herb

Common cephalanoplos herb is the dried aerial part of *Cirsium setosum* (Willd.) M. B. (Fam. Compositae).
It contains not less than 0.70% of buddleoside.

Description: About 50 cm in length, with rhizomes. Stems cylindrical, easily broken, 2~4 mm in diameter, externally green or purplish-brown, with longitudinal ridges and white pubescence, texture fragile, fracture fibrous and hollow. Leaves alternate, petioled, lamina broken or crumpled, yellowish-green, both surfaces with white arachnoid tomentum, margins entire or undulate, with aureate spines. Captitulum terminal, involucres campanulate, phyllaries yellowish-green, 5~6 layers, linear or lanceolate; corolla fallen off, pappi feathery, often exposed. Odor, slight; taste, slightly bitter.

Microscopic identification:

1. **Transverse section:**
   (1) Stem: Epidermal cells covered with cuticles, occasionally with multicellular non-glandular hairs. Hypodermal collenchyma present at angular regions with slightly lignified walls. Cortex composed of several to more than 10 layers of elongated tangential parenchymatous cells, scattered with secretory cells and stone cells. Vascular bundles in a ring, phloem narrow; pericyclic fiber in bundles, slightly lignified outside the phloem; xylem vessels located in middle and lower parts of xylem, some lignified fiber bundles consist in the inner part of xylem. Pith usually hollow in the center.
   (2) Leaf: In surface view, upper epidermal cells subpolygonal, cutin striations distinct; lower epidermal cells irregular in shape, anticlinal walls curved. Stomata anomocytic or anisocytic. Whip-shaped non-glandular hairs mostly broken, composed 3~18 cells in whole, 10~18 μm in diameter at the base, with a slender apical cell, shrunken and twisted. Mesophyll containing irregular masses and crystals of calcium oxalate, mostly needle-clustered, prisms or columnar.

Thin layer chromatographic identification test (General rule 1010.3):

1. Sample solution: Add 0.5 g of powdered sample to 5 mL of methanol, ultrasonicate for 30 minutes, filter, evaporate the filtrate to dryness, and dissolve the residue in 2 mL of methanol.
2. Reference drug solution: Use 0.5 g of the reference drug as the same method described above.
3. Reference standard solution: Weigh accurately a quantity of buddleoside and dissolve in methanol to produce a solution containing 0.5 mg per mL.
4. Procedure: Use polyamide as the coating substance and a solution of acetylacetone, butanone, ethanol and water (1:3:3:13) as the developing solvent. Apply 1 μL of each of the above solutions to the plate. Once the top of the solvent rise to about 5~10 cm from the origin, dry in air. Spray with a solution of aluminum chloride ($AlCl_3$/EtOH TS). Examine under ultraviolet light at 365 nm. The spots in the chromatogram obtained from the sample solution correspond in R_f values and color to the spots in the chromatogram obtained from the reference drug solution and the reference standard solution.

Assay:

1. Buddleoside:
   (1) Mobile phase: A solution of methanol and 0.5% acetic acid (55:45). The ratio varies as required.
   (2) Reference standard solution: Weigh accurately a quantity of buddleoside and dissolve in methanol to produce a solution containing 0.1 mg per mL.
   (3) Sample solution: Weigh accurately 0.1 g of powdered sample, transfer to a conical flask with stopper, accurately add 10 mL of methanol and weigh, ultrasonicate for 15 minutes, cool and weigh again, replenish the loss of solvent with methanol, shake well, filter and use the filtrate.
   (4) Chromatographic system: The liquid chromatography is equipped with an ultraviolet absorption photometer (wavelength: 326 nm) and a column packed with octadecylsilanized silica gel. The number of theoretical plates of the peak of buddleoside should not be less than 1,500.
   (5) Procedure: Inject accurately 5 μL of each of the reference standard solution and the sample solution into the liquid chromatography apparatus, and calculate the content.

Storage: Store in a ventilated and dry place, and protect from mold.
Usage: Blood-regulating medicinal (Hemostatic medicinal).
Dosage: 3~15 g.

CIRSII JAPONICI HERBA ET RADIX
大蓟
Da Ji / Da Ji
Japanese Thistle Herb and Root

Japanese thistle herb and root is the dried aerial part and root of *Cirsium japonicum* DC. (Fam. Compositae).
It contains not less than 10.0% of dilute ethanol-soluble extractives and not less than 10.0% of water extractives.

Description: 1 m in length. Stem cylindrical, upper branches, 0.5~2 cm in diameter; externally brown or greenish-brown, with longitudinal ridges and grayish-white filamentous hairs; texture loose, fracture yellowish-white, pith white and mostly hollow. Leaves alternated, crumpled, greenish-brown, oblanceolate or obovate-lanceolate as whole, pinnatipartite, margin with unequal spines, with grayish-white filamentous hairs on both surfaces. Captitulum terminal, subglobose, about 2.5 cm in diameter, involucres yellowish-brown, phyllaries lanceolate, 4~6 layers, slightly purple-black dots; tubular flowers purplish-red, mostly fallen off, pappi feathery and yellowish-white. Odor, slight; taste, weak. Rhizomes noded, stem base remained on the top, the lower part with numerous slender roots. Roots fusiform, slightly curved, 5~10 cm in length; externally dark brown, with longitudinal wrinkles; texture hard and fragile, easily broken, fracture coarser, bark thin, brown, with fine fissures, wood whitish. Odor, specific; taste, slightly bitter and astringent.

Microscopic identification:

1. **Transverse section:**
   (1) Stem: Epidermal cells mostly shrunken, occasionally with whip-shaped non-glandular hairs, collenchymatous tissue existed under epidermis of ridges. Cortex composed of 5~9 layers of tangentially elongated parenchymatous cells. Vascular bundles collateral, containing slightly lignified phloem fiber bundles; slightly lignified fiber bundles also existed in the inner side of xylem. The major portion of stem is occupied by pith, the central part often hollow.
   (2) Leaf: Upper epidermal cells subpolygonal on surface view; lower epidermal cells irregular or subrectangular, anticlinal walls undulate. Stomata anisocytic or anomocytic. Whip-shaped non-glandular hairs extremely numerous, mostly broken, 4~18 cells or more in complete, basal cells 15~150 μm in diameter, apical cells extremely slim and twisted, about 7 μm in diameter. Mesophyllous cells contain clusters of calcium oxalate, 13~24 μm in diameter; raphides of calcium oxalate up to 15 μm in length.
   (3) Root: Epidermal cells with lignified walls, usually exfoliated. Cortex relatively broad, close to the outer endodermis scattered with subrounded secretory canals, 70~140 μm in diameter, densely arranged in a ring. Endodermis distinct. Phloem relatively narrow; cambium arranged in a ring; xylem vessels grouped in several, radially elongated. Rays broad with pith in the center.
2. **Powder:** Brownish-green. Whip-shaped non-glandular hairs extremely long, mostly broken, 4~30 cells in complete; 1~2 or several cells on the apex very slim; shrunken and twisted, 17~182 μm in diameter, the wall 3~14 μm thick, some basal cells with thick walls and slightly curved cuticular striations, containing yellowish-brown contents. Unicellular non-glandular hairs (aigrettes) vary in length, up to 17 μm in diameter. Upper epidermal cells subpolygonal in surface view, anticlinal walls slightly thickened or moniliformed; lower epidermal cells undulate; fine cuticular striations present on both upper and lower epidermises. Stomata anomocytic or anisocytic, with 3~5 subsidiary cells. Crystals of calcium oxalate clustered needle-like or fan-shaped, 3~18 μm in diameter, present in leaf epidermis and mesophyllous cells. Epidermal cells of involucres strip-shaped in surface view, anticlinal walls moniliform thickened, oblique pits visible, scattered with sclerenchyma cells (short and stiff hairs). Sclerenchyma cells yellow, ovoid in surface view, 28~35 μm in diameter, 40~58 μm in length, wall 8~15 μm thick, lignified or slightly lignified, with distinct striations; lumen subrounded or narrow slit-shaped, occasionally containing yellowish-brown contents; subrounded in sectional view, protuberances visible on epidermis. Upper epidermal cells of involucres slim, 8~15 μm in diameter, wall slightly thickened, some contain brownish-yellow contents. Stone cells of endocarp rhombic, subrectangular or irregular, 14~58 μm in diameter, 38~144 μm in length, wall 3~14 μm thick, some with pit canals or small prisms of calcium oxalate. Parenchymatous cells of exocarp, flaky and strip-shaped, with slightly oblique ends, thin-walled, with very fine and dense crossed striations. Epidermal cells of exocarp subpolygonal in surface view, scattered with oblong cells containing fine spiral striations. Fibers of exocarp fusiform, 10~17 μm in diameter, 47~167 μm in length, wall 3~5 μm thick, containing round pits and distinct pit canals. Fibers of involucres 8~25 μm in diameter, wall 3~7 μm thick, containing oblique pit apertures. Fibers of stem slim, 10~26 μm in diameter, the wall up to 3 μm thick, containing small round pits.

Thin layer chromatographic identification test (General rule 1010.3):

1. Sample solution: Add 1.0 g of powdered sample to 10 mL of methanol, ultrasonicate for 30 minutes, filter, evaporate the filtrate to dryness, and dissolve the residue in 2 mL of methanol.
2. Reference drug solution: Use 1.0 g of the reference drug as the same method described above.
3. Procedure: Use polyamide as the coating substance and a solution of acetylacetone, butanone, ethanol and water (1:3:3:13) as the developing solvent. Apply 1~2 μL of each of the above solutions to the plate. Once the top of the solvent rise to about 5~10 cm from the origin, dry in air. Spray with a solution of aluminum chloride in ethanol

($AlC1_3$/EtOH TS). Examine under ultraviolet light at 365 nm. The spots in the chromatogram obtained from the sample solution correspond in R_f values and color to the spots in the chromatogram obtained from the reference drug solution.

Impurities and other requirements:
1. Total ash: Not more than 9.0% (General rule 5004).
2. Acid-insoluble ash: Not more than 3.0% (General rule 5004).

Assay:
1. Water extractives: Carry out the method for determination of water extractives (General rule 5006).
2. Dilute ethanol extractives: Carry out the method for determination of dilute ethanol-soluble extractives (General rule 5006).

Storage: Store in a ventilated and dry place.
Usage: Blood-regulating medicinal (Hemostatic medicinal).
Dosage: 10~15 g for dried one, 30~60 g for fresh one.

CISTANCHES HERBA
肉蓯蓉
Rou Cong Rong / Rou Cong Rong
Desert-living Cistanche

Desert-living cistanche is the dried fleshy stem with scale leaves of *Cistanche deserticola* Y. C. Ma or *Cistanche tubulosa* (Schrenk) Wight (Fam. Orobanchaceae).
It contains not less than 35.0% of dilute ethanol-soluble extractives and not less than 0.3% of the total amount of echinacoside and verbascoside of the dried fleshy stem of *Cistanche deserticola*. It contains not less than 25.0% of dilute ethanol-soluble extractives and not less than 1.5% of the total amount of echinacoside and verbascoside of the dried fleshy stem of *Cistanche tubulosa*.

Description: Flattened cylindrical, slightly curved, 3~15 cm in length, 3~6 cm in diameter. Externally grayish-brown, with longitudinal furrows and imbricated fleshy triangular scale leaves, the scars of scale leaves often remain. Texture hard and tenacious, uneasily broken, fracture brown, with vascular bundles arranged in serrated rings. Odor, slight; taste, slightly sweet and slightly bitter.

Microscopic identification:
1. **Transverse section:** Epidermis composed of 1 layer of subpolygonal cells, covered with cuticle. Cortex composed of more than 10 layers of parenchymatous cells, subrectangular or polygonal, arranged densely, lumen contains pale yellow pigments. Vascular bundles arranged in serrate-shaped ring; parenchymatous cells of phloem arranged densely; cambium indistinct; xylem vessels mostly in groups; rays distinct; pith polygonal, occasionally the center smashes forming a cavity. Cortex and pith parenchymatous cells contain starch granules, simple granules subrounded and elliptical.
2. **Powder:** Dark brown. Starch granules numerous, simple granules subrounded or elliptical, about 5~45 μm in diameter, hilum mostly dotted, cleft-shaped or Y-shaped; compound granules relatively less, composed of 2~4 components. Vessels mainly reticulated, a few spiral, about 11~54 μm in diameter. Fibers mostly in bundles, pale yellow, long-subrhombic, about 9~25 μm in diameter and 90~500 μm in length.

Thin layer chromatographic identification test (General rule 1010.3):
1. Sample solution: Add 1.0 g of powdered sample to 20 mL of methanol, ultrasonicate for 15 minutes, filter, evaporate the filtrate to dryness, dissolve the residue in 2 mL of methanol.
2. Reference drug solution: Use 1.0 g of the reference drug as the same method described above.
3. Procedure: Use silica gel F_{254} as the coating substance and a solution of methanol, acetic acid and water (2:1:7) as the developing solvent. Apply 2 μL of each of the above solutions to the plate. Once the top of the solvent rise to about 5~10 cm from the origin, dry in air. Examine under the ultraviolet light at 365 nm. The spots in the chromatogram obtained from the sample solution correspond in R_f values and color to the spots in the chromatogram obtained from the reference drug solution.

Impurities and other requirements:
1. Total ash: Not more than 8.0% (General rule 5004).
2. Acid-insoluble ash: Not more than 2.0% (General rule 5004).

Assay:
1. Echinacoside and verbascoside:
   (1) Mobile phase: A solution of methanol as the mobile phase A, and a solution of 0.1% formic acid as the mobile phase B.
   (2) Reference standard solution: Weigh accurately a quantity of echinacoside and verbascoside and dissolve in 50% methanol to produce a solution containing 0.2 mg per mL of each.
   (3) Sample solution: Weigh accurately 1.0 g of powdered sample in a 100-mL amber volumetric flask. Add accurately 50 mL of 50% methanol, stopper tightly and mix well, weigh, and macerate for 30 minutes, ultrasonicate for 40 minutes, cool and weigh again, replenish the loss of the weight with

50% methanol, mix well, stand, filter the supernatant and use the successive filtrate.

(4) Chromatographic system: The liquid chromatography is equipped with an ultraviolet absorption photometer (wavelength: 330 nm) and a column packed with octadecylsilanized silica gel. Program the chromatographic system as follows. The number of theoretical plates of the peak of echinacoside should not be less than 3,000.

Time (min)	Mobile phase A (%)	Mobile phase B (%)
0~17	26.5	73.5
17~20	26.5→29.5	73.5→70.5
20~27	29.5	70.5

(5) Procedure: Inject accurately 10 μL of each of the reference standard solution and the sample solution into the liquid chromatography apparatus, and calculate the content.

2. Dilute ethanol extractives: Carry out the method for determination of dilute ethanol-soluble extractives (General rule 5006).

Storage: Refrigerate or store in a cool and dry place, and protect from mold and insects.
Usage: Tonifying and replenishing medicinal (Yang-tonifying medicinal).
Dosage: 6~9 g.

CITRI EXOCARPIUM RUBRUM
橘紅
Jyu Hong / Ju Hong
Red Tangerine Exocarp

Red tangerine exocarp is the dried exocarp of *Citrus reticulata* Blanco and its cultivated varieties (Fam. Rutaceae).
It contains not less than 14.0% of dilute ethanol-soluble extractives, not less than 18.0% of water extractives and not less than 1.7% of hesperidin.

Description: Long stripes or irregular thin slices, margin shrunken and curved inward. The outer surface yellowish-brown or orange-red, becoming brown and with numerous yellowish-white protruding or dented-dotted oil cavities after storage. The inner surface yellowish-white, with numerous sunken and transparent small spots. Texture fragile, easily broken. Odor, aromatic; taste, slightly bitter and numb.

Microscopic identification:

1. **Powder:** Pale yellowish-brown. Epidermal cells of exocarp polygonal, subsquare or rectangular in surface view, anticlinal walls thickened. Stomata subrounded, 18~26 μm in diameter, subsidiary cells indistinct. The walls of parenchymatous cells of fragments of oil cavities slightly thickened. Prisms of calcium oxalate abundant, 4~31 μm in diameter, occurring singly in parenchymatous cells, rhombic, double-conical to irregularly polygonal; polychromatic under the polarized microscope. Fan-shaped cluster crystals yellow, sometimes visible, usually aggregated into spheroid or amorphous masses; polychromatic under the polarized microscope.

Thin layer chromatographic identification test (General rule 1010.3):

1. Sample solution: Add 1.0 g of powdered sample to 15 mL of methanol, ultrasonicate for 30 minutes, filter and use the filtrate.
2. Reference drug solution: Use 1.0 g of the reference drug as the same method described above.
3. Reference standard solution: Weigh accurately a quantity of hesperidin and dissolve in methanol to produce a solution containing 1.0 mg per mL.
4. Procedure: Use silica gel F_{254} as the coating substance and a solution of ethyl acetate, 4N ammonia and ethanol (4:1:2) as the developing solvent. Apply 10 μL of each of the above solutions to the plate. Once the top of the solvent rise to about 5~10 cm from the origin, dry in air. Spray with a solution of vanillin in a solution of sulfuric acid and methanol (Vanillin/H_2SO_4 MeOH TS), heat at 105℃ until the spots become visible. The spots in the chromatogram obtained from the sample solution correspond in R_f values and color to the spots in the chromatogram obtained from the reference drug solution and the reference standard solution.

Impurities and other requirements:

1. Total ash: Not more than 5.0% (General rule 5004).
2. Acid-insoluble ash: Not more than 2.0% (General rule 5004).

Assay:

1. Hesperidin:
   (1) Mobile phase: A solution of methanol and water (40:60). The ratio varies as required.
   (2) Reference standard solution: Place hesperidin in a phosphorus pentoxide dryer at 50°C, depressurize (below 5 mm Hg) for more than 12 hours. Weigh accurately a quantity and dissolve in methanol to produce a solution containing 60 μg per mL.
   (3) Sample solution: Weigh accurately 200 mg of the powdered sample, accurately add 20 mL of methanol, heat under reflux for 1 hour, cool, filter, transfer the solution to 50-mL volumetric flask, and wash the residue with a small quantity of methanol to volume.
   (4) Chromatographic system: The liquid chromatography is equipped with an

ultraviolet absorption photometer (wavelength: 284 nm) and a column (4~6 mm × 15~25 cm) packed with octadecylsilanized silica gel (5~10 μm in particle diameter). The column temperature is maintained at room temperature. Inject reference standard solution into the liquid chromatography apparatus for five times, and record the peak areas. The relative standard deviation of the peak area of hesperidin should not be more than 1.5%.

(5) Procedure: Inject accurately 10~20 μL of each of the reference standard solution and the sample solution into the liquid chromatography apparatus, and calculate the content.

2. Water extractives: Carry out the method for determination of water extractives (General rule 5006).
3. Dilute ethanol extractives: Carry out the method for determination of dilute ethanol-soluble extractives (General rule 5006).

Storage: Refrigerate or store in a cool and dry place, and protect from insects.
Usage: Qi-regulating medicinal.
Dosage: 3~10 g.

CITRI GRANDIS EXOCARPIUM
化橘紅
Hua Jyu Hong / Hua Ju Hong
Pummelo Exocarp

Pummelo exocarp is the dried exocarp of immature or almost ripe *Citrus grandis* (L.) Osbeck var. *tomentosa* Hort or *Citrus grandis* (L.) Osbeck (Fam. Rutaceae).
It contains not less than 18.0% of dilute ethanol-soluble extractives, not less than 21.0% of water extractives and not less than 1.5% of naringin.

Description:

1. Exocarp of *Citrus grandis* var. *tomentosa*: The exocarp cut into pentagonal, hexagonal or heptagonal, opposite-folded, commonly known as "Wu Zhua", "Liu Zhua" or "Qi Zhua", or only fold the edge into plum flower form, as whole, 14~28 cm in diameter, 2~5 mm thick. The single piece oval and acute, commonly known as "Jian Hua Hong", about 10 cm in length, about 3.5 cm in width. Externally pale green, yellowish-green or brownish-yellow, coarse, with dense round pits (oil cavities), tomentellate; inner surface yellowish-white, with veins striations. Texture fragile, fracture with one row sunken oil cavity in the outer border. Odor, slightly aromatic; taste, bitter and astringent.
2. Exocarp of *Citrus grandis*: Externally yellowish-green or yellowish-brown, no tomentum.

Microscopic identification:

1. **Powder:**
   (1) Exocarp of *Citrus grandis* var. *tomentosa*: Grayish-brown. Mesocarp parenchymatous cells irregular in shape, with irregular 2~5 μm thickened walls. Epidermal cells of exocarp subsquare in sectional view, the cuticle 5~9 μm thick; polygonal or subsquare in surface view, 5~14 μm in diameter; stomata with 5~8 subsidiary cells. The scars of non-glandular hairs visible, surrounded by about 10 cells arranged in a ring. Non-glandular hairs unicellular with several sections, complete ones 170~454 μm long, 14~35 μm in diameter, the wall 4~10 μm thick; inner walls shrunken, outer walls with warty protrusions; lumens contain 1~10 extremely thin sections, separated non-glandular hairs into multicellular, some sections relatively thickened. Prisms of calcium oxalate existed in parenchymatous tissue of mesocarp and exocarp, occasionally single cell contains several crystals, polyhedral, biconical, rhombic or subsquare, 5~18 μm in diameter, up to 31 μm long. Small vessels, tracheid, irregular brown masses and occasionally with oil droplets also exist.
   (2) Exocarp of *Citrus grandis*: Grayish-brown or yellowish-green. The walls of mesocarp parenchymatous cells 1.5~10 μm thick. The cuticle of exocarp 7~11 μm thick; 6~26 μm in diameter in surface view, walls relatively thin. Prisms of calcium oxalate 7~32 μm in diameter, 45 μm long. Some fibers and stone cells also present.

Thin layer chromatographic identification test (General rule 1010.3):

1. Sample solution: Add 1.0 g of powdered sample to 10 mL of methanol, ultrasonicate for 30 minutes, filter and use the filtrate.
2. Reference drug solution: Use 1.0 g of the reference drug as the same method described above.
3. Reference standard solution: Weigh accurately a quantity of naringin and dissolve in methanol to produce a solution containing 0.4 mg per mL.
4. Procedure: Use silica gel F_{254} as the coating substance and the supernatant of the mixture of ethyl acetate, methanol and water (10:2:3) at 10℃ as the developing solvent. Apply 5 μL of each of the above solutions to the plate. Once the top of the solvent rise to about 5~10 cm from the origin, dry in air. Spray with a 5% solution of aluminum chloride in ethanol ($AlCl_3$/EtOH TS). Examine under ultraviolet light at 365 nm. The spots in the chromatogram obtained from the sample solution correspond in R_f values and color to the spots in the chromatogram obtained from the reference drug solution and the reference standard solution.

Impurities and other requirements:

1. Loss on drying: Not more than 15.0% under heating at 105℃ for 5 hours (General rule 5008).
2. Total ash: Not more than 7.0% (General rule 5004).
3. Acid-insoluble ash: Not more than 1.0% (General rule 5004).

Assay:

1. Naringin:
   (1) Mobile phase: A solution of methanol, acetic acid and water (35:4:61). The ratio varies as required.
   (2) Reference standard solution: Place naringin in a phosphorus pentoxide dryer at 50°C, and depressurize (below 5 mm Hg) for 12 hours. Weigh accurately 1.0 mg and dissolve in methanol to 10 mL, and mix well.
   (3) Sample solution: Weigh accurately 0.5 g of powdered sample, add 30 mL of methanol, ultrasonicate for 30 minutes, centrifugal filtration. The residue, add 30 mL of methanol again and use the same mothod twice described above twice. Combine all supernatants and add methanol to 100 mL, mix well.
   (4) Chromatographic system: The liquid chromatography is equipped with an ultraviolet absorption photometer (wavelength: 252 nm) and a column (4~6 mm × 15~25 cm) packed with octadecylsilanized silica gel (5~10 μm in particle diameter). The column temperature is maintained at room temperature. Inject reference standard solution into the liquid chromatography apparatus for five times, and record the peak areas. The relative standard deviation of the peak area of naringin should not be more than 1.5%.
   (5) Procedure: Inject accurately 20 μL of each of the reference standard solution and the sample solution into the liquid chromatography apparatus, and calculate the content.
2. Water extractives: Carry out the method for determination of water extractives (General rule 5006).
3. Dilute ethanol extractives: Carry out the method for determination of dilute ethanol-soluble extractives (General rule 5006).

Storage: Store in a cool and dry place, and protect from mold and insects.
Usage: Qi-regulating medicinal.
Dosage: 3~10 g.

CITRI IMMATURUS FRUCTUS
枳殼
Jhih Ke / Zhi Ke
Bitter Orange

Bitter orange is the dried immature fruit of *Citrus aurantium* L. and its cultivated varieties (Fam. Rutaceae). It contains not less than 18.0% of dilute ethanol-soluble extractives, not less than 20.0% of water extractives and not less than 2.5% of naringin.

Description: Semispheroidal, 3~5 cm in diameter. Exocarp brown, slightly rough, with granular protuberance, apex of protuberance with dented oil spots (oil cavity), the scars of style or fruit stalk distinct in the center. Mesocarp yellowish-white, smooth and slightly protuberant, 0.4~1.3 cm thick, with 1~2 rows of oil cavities at the outer part of pericarp. Pulp vesicles 7~12, rarely up to 15, juice vesicles dried and shrunken, brown, containing seeds. Axis compact, 5~9 mm in width, yellowish-white, with an interrupted ring of vascular bundle. Texture hard, uneasily broken. Odor, aromatic; taste, bitter and slightly sour.

Microscopic identification:

1. **Transverse section:** Cell structures of bitter orange are very similar to immature bitter orange. Bitter orange with relatively thin epidermis, without villus, cells gradually larger from outside to inside, containing oil-like contents sedimentary and collenchymatous cell groups, scattered among parenchymatous cells.
2. **Powder:** Brown. Parenchymatous cells of mesocarp vary in shape, wall mostly thickened unevenly and unlignified, 8~16 μm in diameter. Epidermal cells of pericarp polygonal, square or slender in surface view, up to about 13 μm in diameter and up to 20~32 μm in length; stomata subrounded, with 5~8 subsidiary cells; oblique-square in sectional view, up to about 40 μm in length. Epidermal cells of juice vesicles slender, wall extremely thin, undulately curved, or cells shrinking as lines, inside showing parenchymatous tissue scattered with numerous prisms of calcium oxalate. Fragments of oil cavities, volatile oil droplets, fine vessels and tracheids also present.

Thin layer chromatographic identification test (General rule 1010.3):

1. Sample solution: Add 0.2 g of powdered sample to 10 mL of methanol, ultrasonicate for 30 minutes, filter, evaporate the filtrate to dryness, and dissolve the residue in 5 mL of methanol.
2. Reference drug solution: Use 0.2 g of the reference drug as the same method described above.
3. Reference standard solution: Weigh accurately a quantity of naringin and dissolve in methanol to produce a solution containing 0.5 mg per mL.

4. Procedure: Use silica gel F_{254} as the coating substance and a solution of *n*-butanol, acetic acid and water (4:1:1) as the developing solvent. Apply 5 μL of each of the above solutions to the plate. Once the top of the solvent rise to about 5~10 cm from the origin, dry in air. Spray with a 1% solution of aluminum chloride in ethanol ($AlC1_3$/EtOH TS), examine under the ultraviolet light at 365 nm. The spots in the chromatogram obtained from the sample solution correspond in R_f values and color to the spots in the chromatogram obtained from the reference drug solution and the reference standard solution.

Impurities and other requirements:
1. Loss on drying: Not more than 14.0% under heating at 105℃ for 5 hours (General rule 5008).
2. Total ash: Not more than 7.0% (General rule 5004).
3. Acid-insoluble ash: Not more than 2.0% (General rule 5004).

Assay:
1. Naringin:
   (1) Mobile phase: A solution of water and acetonitrile (80.5:21.5), and adjust pH value to 3.0 with phosphoric acid. The ratio varies as required.
   (2) Reference standard solution: Predry and weigh accurately a quantity of naringin and dissolve in methanol to produce a solution containing 0.06 mg per mL.
   (3) Sample solution: Weigh accurately 200 mg of powdered sample, transfer to a centrifuge tube, add 100 mL of methanol, ultrasonicate for 15 minutes, filter and use the filtrate.
   (4) Chromatographic system: The liquid chromatography is equipped with an ultraviolet absorption photometer (wavelength: 283 nm) and a column (4~6 mm × 15~25 cm) packed with octadecylsilanized silica gel (5~10 μm in particle diameter). The column temperature is maintained at room temperature. The retention time of naringin is about 10 minute. Inject reference standard solution into the liquid chromatography apparatus for five times, and record the peak areas. The relative standard deviation of the peak area of naringin should not be more than 1.5%.
   (5) Procedure: Inject accurately 20 μL of each of the reference standard solution and the sample solution into the liquid chromatography apparatus, and calculate the content.
2. Water extractives: Carry out the method for determination of water extractives (General rule 5006).
3. Dilute ethanol extractives: Carry out the method for determination of dilute ethanol-soluble extractives (General rule 5006).

Storage: Store in a ventilated and dry place, and protect from insects.
Usage: Qi-regulating medicinal.
Dosage: 3~10 g.

CITRI RETICULATAE PERICARPIUM
陳皮
Chen Pi / Chen Pi
Tangerine Peel

Tangerine peel is the dried pericarp of the ripe fruit of *Citrus reticulata* Blanco and its cultivated varieties (Fam. Rutaceae). The drug is subdivided into two classes, commonly known as "Guang Chen Pi" and "Chen Pi".
It contains not less than 22.0% of dilute ethanol-soluble extractives, not less than 24.0% of water extractives and not less than 2.0% of hesperidin.

Description:
1. Guang Chen Pi: Often peeled in three lobes, 1~2 mm thick, often curved inwards. Externally yellowish-orange or reddish-orange, shrunken, with numerous dented or protuberant oil dots (oil cavity). Internally pale yellowish-white, spongy. Texture light and slightly tenacious. Odor, aromatic; taste, slightly bitter and pungent.
2. Chen Pi: Often peeled in several lobes or in irregular slices, 2~3 mm thick. Externally orange-red or brown, darkened after storage, with fine oil dots. Internally pale yellowish-white. Texture relatively fragile, easily broken. Odor, relatively weak; taste, bitter and pungent.

Microscopic identification:
1. **Transverse section:**
   (1) Guang Chen Pi: Epidermis of exocarp composed of 1 layer of small subsquare cells, covered with cuticle, with stomata; inside showing several layers of parenchyma tissue scattered with 1~2 layers of oil cavities, oil cavities round or elliptical, 300~1,010 μm in diameter, 450~1,270 μm in length. Mesocarp cells irregular in shape, wall thickened unevenly, with large intercellular spaces; vascular bundles scattered in collateral type. Parenchymatous cells containing prisms of calcium oxalate, mostly distributed near epidermis; some cells contain hesperidin crystals.
   (2) Chen Pi: Prisms of calcium oxalate relatively numerous, rhombic, polyhedral or biconical, up to about 37 μm in length, a few of crystals arranged parallelly, composed of two polyhedron, up to about 43 μm in length.

2. **Powder:** Pale yellowish-brown. Parenchymatous cells of mesocarp varying in shape, wall unevenly thickened, about 8 μm thick, unlignified, occasionally moniliform thickened or containing hesperidin crystals. Epidermal cells of exocarp polygonal, subsquare or rectangular in surface view, wall thin, stomata subrounded, with 6~8 subsidiary cells; inside showing parenchymatous cells containing prisms of calcium oxalate, polyhedral, biconical or subsquare, 19 μm in diameter, up to about 32 μm in length, occasionally containing hesperidin crystals. Oil cavities mostly broken, vessels and tracheids fine.

Thin layer chromatographic identification test (General rule 1010.3):

1. Sample solution: Add 1.0 g of powdered sample to 10 mL of methanol, ultrasonicate for 30 minutes, filter and make up the filtrate to 10 mL.
2. Reference drug solution: Use 1.0 g of the reference drug as the same method described above.
3. Reference standard solution: Weigh accurately a quantity of hesperidin and dissolve in methanol to produce a saturated solution.
4. Procedure: Use silica gel F_{254} as the coating substance and a solution of ethyl acetate, methanol and water (100:17:13) as the developing solvent. Apply 5 μL of each of the above solutions to the plate. Once the top of the solvent rise to about 3 cm from the origin, dry in air, and then use the supernatant of toluene, ethyl acetate, formic acid and water (20:10:1:1) as the developing solvent. Once the top of the solvent rise to about 5~10 cm from the origin, dry in air. Spray with a solution of aluminum chloride in ethanol ($AlCl_3$/EtOH TS) and examine under the ultraviolet light at 365 nm. The spots in the chromatogram obtained from the sample solution correspond in R_f values and color to the spots in the chromatogram obtained with the reference drug solution and the reference standard solution.

Impurities and other requirements:

1. Total ash: Not more than 7.0% (General rule 5004).
2. Acid-insoluble ash: Not more than 2.0% (General rule 5004).
3. Pesticide residues:
   (1) The total DDT content: Not more than 0.2 ppm (General rule 3052).
   (2) The total BHC content: Not more than 0.2 ppm (General rule 3052).

Assay:

1. Hesperidin:
   (1) Mobile phase: A 1,000 mL mixture of 0.2% phosphoric acid and acetonitrile (80：20). The ratio varies as required.
   (2) Reference standard solution: Weigh accurately 1 mg of hesperidin and dissolve in 10 mL methanol.
   (3) Sample solution: Weigh accurately 200 mg of the powdered sample, add 20 mL of methanol, ultrasonicate for 30 minutes, cool, filter, make up the filtrate to 25 mL with methanol and mix well.
   (4) Chromatographic system: The liquid chromatography is equipped with an ultraviolet absorption photometer (wavelength: 280 nm) and a column (4~6 mm × 15~25 cm) packed with octadecylsilanized silica gel (5~10 μm in particle diameter). The retention time of hesperidin is about 10 minutes.
   (5) Procedure: Inject accurately 20 μL of each of the reference standard solution and the sample solution into the liquid chromatography apparatus, and calculate the content.
2. Water extractives: Carry out the method for determination of water extractives (General rule 5006).
3. Dilute ethanol extractives: Carry out the method for determination of dilute ethanol-soluble extractives (General rule 5006).

Storage: Store in a dry place, and protect from mold and insects.
Usage: Qi-regulating medicinal.
Dosage: 3~9 g.

CITRI RETICULATAE PERICARPIUM VIRIDE
青皮
Cing Pi / Qing Pi
Green Tangerine Peel

Green tangerine peel is the dried pericarp of the young or immature fruit of *Citrus reticulata* Blanco (Fam. Rutaceae), commonly known as “Ge Qing Pi” and “Si Hua Qing Pi”.
It contains not less than 12.0% of dilute ethanol-soluble extractives, not less than 12.0% of water extractive and not less than 3.0% of hesperidin.

Description:

1. Ge Qing Pi (young fruits): Subspheroidal, 0.5~2 cm in diameter. Exocarp grayish-green or blackish-green, slightly rough, with numerous dented oil cavities, apex remained with stylopodium, base with a rounded scar of fruit stalk. Mesocarp yellowish-white or pale yellowish-brown, 1~2 mm thick, with 1~2 layers of oil cavities at the edges, pulp vesicles 8~10 in the center, pale grayish-brown. Odor, delicately aromatic; taste, bitter and pungent.
2. Si Hua Qing Pi (immature fruits): Pericarp cut into four lobes, oblong, 4~6 cm in length, 1~2 mm thick. The outer surface grayish-green or blackish-green, with dense and numerous oil

cavities; the inner surface whitish or yellowish-white, with yellowish-white or yellowish-brown small veins.

Microscopic identification:

1. **Transverse section:** Outermost layer composed of 1 layer of epidermis covered with cuticle, cells flat-rectangular or flat-square, with stomata. Mesocarp occupied about 1/2 of the pericarp, composed of parenchymatous cells, oil cavities and vascular bundles; parenchymatous cells with walls slightly thickened, 3~5 layers of cells near the outer part flat-rectangular, subsquare or subrounded, containing orange-yellow granule-like contents, scattered with prisms of calcium oxalate, cells gradually large from outside to inside, elongated radially, with intercellular spaces; oil cavities scattered irregularly, 1~2 layered, suboval or suboblong, varying in size, composed of numerous flat-rectangular or flat-elliptical secretory cells, containing oil droplets. Vascular bundles scattered, composed of vessels and parenchymatous cells; vessels mainly spiral and annular, 3~6 μm in diameter, arranged tangentially or radially, cells subrounded or long strip-shaped; parenchymatous cells small, subrounded or long strip-shaped. Endocarp occupied about 1/2 of the pericarp, composed of parenchymatous cells, arranged sparsely, containing aerenchyma.
2. **Powder:** Pale grayish-yellow. Parenchymatous cells of mesocarp vary in size, walls irregularly thickened, 2~7 μm thick, extremely thickened at corners, occasionally with some pit canals, cells containing pale yellow hesperidin crystals subrounded or irregular in shape. Epidermal cells of pericarp polygonal or subsquare in surface view, up to about 14 μm in diameter, walls thin; stomata with 7~9 subsidiary cells. Prisms of calcium oxalate existed in parenchymatous cell of pericarp, biconical, rhombic, cylindrical or irregularly polyhedral, 3~15 μm in diameter, up to 22 μm in length. Vessels, tracheids and fragments of oil cavities occasionally present.

Thin layer chromatographic identification test (General rule 1010.3):

1. Sample solution: Add 0.3 g of powdered sample to 10 mL of methanol, heat under reflux for 20 minutes, filter and evaporate 5 mL of the filtrate to 1 mL.
2. Reference drug solution: Use 0.3 g of the reference drug as the same method described above.
3. Reference standard solution: Weigh accurately a quantity of hesperidin and dissolve in methanol to produce a saturated solution.
4. Procedure: Use silica gel plate with 0.5% sodium hydroxide solution as the coating substance and a solution of ethyl acetate, methanol and water (100:17:13) as the developing solvent. Apply 5 μL of each of the above solutions to the plate. Once the top of the solvent rise to about 5~10 cm from the origin, dry in air. Spray with a solution of aluminum chloride in ethanol ($AlC1_3$/EtOH TS), examine under the ultraviolet light at 365 nm. The spots in the chromatogram obtained from the sample solution correspond in R_f values and color to the spots in the chromatogram obtained from the reference drug solution and the reference standard solution.

Impurities and other requirements:

1. Loss on drying: Not more than 14.0% under heating at 105℃ for 5 hours (General rule 5008).
2. Total ash: Not more than 7.0% (General rule 5004).
3. Acid-insoluble ash: Not more than 2.0% (General rule 5004).

Assay:

1. Hesperidin:
   (1) Mobile phase: A solution of methanol and water (25:75). The ratio varies as required.
   (2) Reference standard solution: Weigh accurately a quantity of hesperidin and dissolve in methanol to produce a solution containing 0.1 mg per mL.
   (3) Sample solution: Weigh accurately 0.2 g of powdered sample, transfer to a 50-mL volumetric flask, add accurately 30 mL of methanol, ultrasonicate for 30 minutes, cool, weigh again, add methanol to volume, mix well and filter. Take 2 mL of the filtrate to a 5-mL volumetric flask, add methanol to volume, and mix well.
   (4) Chromatographic system: The liquid chromatography is equipped with an ultraviolet absorption photometer (wavelength: 284 nm) and a column (4~6 mm × 15~25 cm) packed with octadecylsilanized silica gel (5~10 μm in particle diameter). The column temperature is maintained at room temperature. Inject reference standard solution into the liquid chromatography apparatus for five times, and record the peak areas. The relative standard deviation of the peak area of hesperidin should not be more than 1.5%.
   (5) Procedure: Inject accurately 10 μL of each of the reference standard solution and the sample solution into the liquid chromatography apparatus, and calculate the content.
2. Water extractives: Carry out the method for determination of water extractives (General rule 5006).
3. Dilute ethanol extractives: Carry out the method for determination of dilute ethanol-soluble extractives (General rule 5006).

Storage: Store in a ventilated and dry place, and protect from insects.
Usage: Qi-regulating medicinal.
Dosage: 3~10 g.

CITRI SARCODACTYLIS FRUCTUS
佛手柑
Fo Shou Gan / Fo Shou Gan
Finger Citron

Finger citron is the dried immature fruit of *Citrus medica* L. var. *sarcodactylis* Swingle (Fam. Rutaceae).
It contains not less than 31.0% of dilute ethanol-soluble extractives, not less than 20.0% of water extractives and not less than 0.030% of hesperidin.

Description: Slices cut in longitudinal section, elliptical, 6~9 cm in length, 3~6 cm in width, 1~2 mm thick. The apex relatively board, with 3~5 finger-shaped lobes, lobes lanceolate, the base relatively narrow, occasionally with a scar of fruit stalk. Exocarp yellowish-green or orange-yellow, with dented oil spots. Mesocarp grayish-white or pale yellowish-white, scattered with yellow dotted or criss-cross vascular bundles. Texture soft. Odor, aromatic; taste, sour and bitter.

Microscopic identification:
1. **Powder:** Pale brownish-yellow. Parenchymatous cells of mesocarp numerous, irregular or subrounded, walls unevenly thickened. Epidermal cells of pericarp irregularly polygonal in surface view, subrounded stomata occasionally present. Prisms of calcium oxalate grouped as polyhedral, rhombic or biconical in the polygonal parenchymatous cells.

Thin layer chromatographic identification test (General rule 1010.3):
1. Sample solution: Add 1.0 g of powdered sample to 10 mL of absolute ethanol, ultrasonicate for 20 minutes, filter, evaporate the filtrate to dryness, and dissolve the residue in 0.5 mL of absolute ethanol.
2. Reference drug solution: Use 1.0 g of the reference drug as the same method described above.
3. Procedure: Use silica gel F_{254} as the coating substance and a solution of *n*-hexane and ethyl acetate (3:1) as the developing solvent. Apply 5 µL of each of the above solutions to the plate. Once the top of the solvent rise to about 5~10 cm from the origin, dry in air. Examine under the ultraviolet light at 254 nm and 365 nm. The spots in the chromatogram obtained from the sample solution correspond in R_f values and color to the spots in the chromatogram obtained from the reference drug solution.

Impurities and other requirements:
1. Loss on drying: Not more than 15.0% under heating at 105℃ for 5 hours (General rule 5008).
2. Total ash: Not more than 5.0% (General rule 5004).
3. Acid-insoluble ash: Not more than 1.0% (General rule 5004).

Assay:
1. Hesperidin:
   (1) Mobile phase: A solution of methanol, water and glacial acetic acid (33:63:2). The ratio varies as required.
   (2) Reference standard solution: Weigh accurately a quantity of hesperidin and dissolve in methanol to produce a solution containing 15 µL per mL.
   (3) Sample solution: Weigh accurately 0.5 g of powdered sample in a conical flask with stopper, accurately add 25 mL of methanol, weigh, heat under reflux for 1 hour, cool, weigh again, replenish the loss of the weight with methanol, mix well and filter, use the successive filtrate.
   (4) Chromatographic system: The liquid chromatography is equipped with an ultraviolet absorption photometer (wavelength: 284 nm) and a column packed with octadecylsilanized silica gel. The number of theoretical plates of the peak of hesperidin should not be less than 5,000.
   (5) Procedure: Inject accurately 10 µL of each of the reference standard solution and the sample solution into the liquid chromatography apparatus, and calculate the content.
2. Water extractives: Carry out the method for determination of water extractives (General rule 5006).
3. Dilute ethanol extractives: Carry out the method for determination of dilute ethanol-soluble extractives (General rule 5006).

Storage: Refrigerate or store in a cool and dry place, and protect from mold and insects.
Usage: Qi-regulating medicinal (Qi-moving medicinal).
Dosage: 3~10 g.

CLEMATIDIS CAULIS
川木通
Chuan Mu Tong / Chuan Mu Tong
Clematis Lianoid Stem

Clematis lianoid stem is the dried lianoid stem of *Clematis montana* Buch.-Ham. or *Clematis armandii* Franch. (Fam. Ranunculaceae).
It contains not less than 4.0% of dilute ethanol-soluble extractives, not less than 6.0% of water extractives and should not contain aristolochic acid I & aristolochic acid II.

Description:

1. Lianoid stem of *Clematis montana*: Long cylindrical, slightly twisted, 50~100 cm in length, 2~3.5 cm in diameter. Externally yellowish-brown, with longitudinal furrows and ridges, occasionally with longitudinal torn; nodes slightly swollen, with scars of leaves and branch. Texture hard, uneasily broken, fracture uneven, bark yellowish-brown, wood pale yellowish-brown and pale yellow, with radial cracks, vessel pores varying in size, scattered densely, pith whitish or yellowish-brown. Odor, slight; taste, slightly bitter.
2. Lianoid stem of *Clematis armandii*: Slender cylindrical, 30~60 cm in length, 0.8~2 cm in diameter. Externally reddish-brown or grayish-yellow, with longitudinal ridges, mostly torn, easily exfoliated from wood, nodes swollen. Odor, slight; taste, bitter.

Microscopic identification:

1. **Transverse section:** Cork consists of 1 layer of cells. Cortex extremely thin, usually shrunken or separated. Groups of fibers and some groups of stone cells scattered in pericyclic, arranged in an undulating ring. Phloem thin. Cambium in a ring. Xylem relatively narrow, composed of vessels, xylem fibers and xylem parenchymatous cells. Vessels polygonal, bigger ones tangentially arranged irregular, cells of primary xylem extended to pith. Medullary rays lignified, composed of more than 6~10 rows of cells. Cells of pith round and lignified, arranged loose. No existence of crystals of calcium oxalate and starch granules in parenchymatous cells.

Thin layer chromatographic identification test (General rule 1010.3):

1. Sample solution: Take 3.0 g of powdered sample to a beaker, add 10 mL of ethanol, ultrasonicate for 30 minutes, filter and make up to 10 mL.
2. Reference drug solution: Use 3.0 g of the reference drug as the same method described above.
3. Procedure: Use silica gel F_{254} as the coating substance and a solution of petroleum ether (30~60 ℃), ethyl acetate and formic acid (6:2:0.1) as the developing solvent. Apply 5 μL of each of the above solutions to the plate. Once the top of the solvent rise to about 5~10 cm from the origin, dry in air. Spray with a 10% solution of sulfuric acid in ethanol (H_2SO_4/EtOH TS) and heat at 105℃ until the spots become visible. Examine under visible light and ultraviolet light at 365 nm. The spots in the chromatogram obtained from the sample solution correspond in R_f values and color to the spots in the chromatogram obtained from the reference drug solution.

Impurities and other requirements:

1. Loss on drying: Not more than 13.0% under heating at 105℃ for 5 hours (General rule 5008).
2. Total ash: Not more than 3.0% (General rule 5004).
3. Acid-insoluble ash: Not more than 1.0% (General rule 5004).
4. Should not contain aristolochic acid I & aristolochic acid II:
   (1) Sample solution: Add 3.0 g of powdered sample to 10 mL of ethanol, ultrasonicate for 30 minutes, filter.
   (2) Reference drug solution: Use 2.0 mg of the reference drug as the same method described above.
   (3) Procedure: Carry out the method for thin layer chromatography (General rule 1010.3), use silica gel F_{254} as the coating substance and a solution of chloroform, ethanol and ethyl acetate (17:3:1) as the developing solvent. Apply 10 μL of each of the above solutions to the plate. Once the top of the solvent rise to about 5~10 cm from the origin, dry in air, and examine under ultraviolet light at 254 nm. Spray with a solution of vanillin in sulfuric acid (Vanillin/H_2SO_4 TS), dry in air, and examine under ultraviolet light at 365 nm. The spots in the chromatogram obtained from the sample solution should not correspond in R_f values and color to the spots in the chromatogram obtained from the reference standard solution.

Assay:

1. Water extractives: Carry out the method for determination of water extractives (General rule 5006).
2. Dilute ethanol extractives: Carry out the method for determination of dilute ethanol-soluble extractives (General rule 5006).

Storage: Store in a ventilated and dry place, and protect from moisture.
Usage: Dampness-draining diuretic medicinal.
Dosage: 3~6 g.

CLEMATIDIS RADIX ET RHIZOMA
威靈仙
Wei Ling Sian / Wei Ling Xian
Clematis Root and Rhizome

Clematis root and rhizome is the dried root and rhizome of *Clematis chinensis* Osbeck, *Clematis hexapetala* Pall. or *Clematis manshurica* Rupr. (Fam. Ranunculaceae).
It contains not less than 17.0% of dilute ethanol-soluble extractives and not less than 14.0% of water extractives.

Description:

1. Root and rhizome of *Clematis chinensis*: Rhizomes horizontal, irregular cylindrical, 1.5~10 cm in length, 0.3~1.5 cm in diameter, with numerous rootlets at the lower and lateral part. Externally

pale brownish-yellow, bark easily exfoliated, fibrous, nodes protuberant, apex remained with lignified stems. Texture relatively tough, fracture fibrous. Roots slender cylindrical, slightly curved, 7~20 cm in length, 0.1~0.3 cm in diameter. Externally brown or blackish-brown, with longitudinally fine wrinkles, occasionally exposing pale yellow wood when bark exfoliated. Texture hard and fragile, easily broken, fracture showing broad bark, often with cleft between bark and wood. Odor, slight; taste, bitter.

2. Root and rhizome of *Clematis hexapetala*: Rhizomes short cylindrical, 1~4 cm in length, 0.5~1 cm in diameter. Roots relatively small, 4~20 cm in length, 0.1~0.2 cm in diameter. Externally brown to brownish-black. Fracture showing smaller wood, shorter than 1/2 diameter of the root. Taste, salty.
3. Root and rhizome of *Clematis manshurica*: Rhizomes cylindrical, 1~11 cm in length, 0.5~2.5 cm in diameter, with numerous rootlets at the upper part, horsetail-like. Externally brownish-black or brown, with numerous distinct fine wrinkles. Fracture showing white bark, wood subrounded, relatively smaller. Taste, pungent.

Microscopic identification:

1. **Transverse section:**
   (1) Root and rhizome of *Clematis chinensis*: Epidermal cells relatively small, subrectangular or subovate, outer wall thickened, dark brown. Exodermal cells arranged densely; cortex broad, cells with distinct pits, containing starch granules and sandy crystals of calcium oxalate, some cells containing volatile oil; endodermis distinct with Casparian strip visible. Phloem narrow. Xylem appearing diarch, completely lignified, vessels broad, xylem fibers and xylem parenchymatous cells with thick walls. Phloem of rhizomes or old roots with a few of lignified fibers and stone cells. Cambium distinct. Vessels mainly pitted, reticulate and spiral.
   (2) Root and rhizome of *Clematis hexapetala*: Both young and old roots without phloem fibers. Stele relatively small, cortex broad.
   (3) Root and rhizome of *Clematis manshurica*: Phloem of young roots with no or a few of fibers; old roots with more phloem fibers. Vessels with large pits. Cortex broad, cells oblong, about 14~16 layers, arranged in a ring. Xylem appearing triarch.

Thin layer chromatographic identification test (General rule 1010.3):

1. Sample solution: Add 1.0 g of powdered sample to 10 mL of methanol, ultrasonicate for 30 minutes, filter and use the filtrate.
2. Reference drug solution: Use 1.0 g of the reference drug as the same method described above.
3. Procedure: Use silica gel F_{254} as the coating substance and a solution of dichloromethane and ethanol (9:1) as the developing solvent. Apply 5 μL of each of the above solutions to the plate. Once the top of solvent rise to about 5~10 cm from the origin, dry in air. Spray with a 10% solution of sulfuric acid in ethanol (H_2SO_4/EtOH TS), heat at 105℃ until the spots become visible, examine under the ultraviolet light at 365 nm. The spots in the chromatogram obtained from the sample solution correspond in R_f values and color to the spots in the chromatogram obtained from the reference drug solution.

Impurities and other requirements:

1. Loss on drying: Not more than 14.0% under heating at 105℃ for 5 hours (General rule 5008).
2. Total ash: Not more than 8.0% (General rule 5004).
3. Acid-insoluble ash: Not more than 3.0% (General rule 5004).

Assay:

1. Water extractives: Carry out the method for determination of water extractives (General rule 5006).
2. Dilute ethanol extractives: Carry out the method for determination of dilute ethanol-soluble extractives (General rule 5006).

Storage: Store in a ventilated and dry place.
Usage: Wind-dampness-dispelling medicinal.
Dosage: 6~9 g.

CNIDII FRUCTUS
蛇床子
She Chuang Zih / She Chuang Zi
Common Cnidium Fruit

Common cnidium fruit is the dried ripe fruit of *Cnidium monnieri* (L.) Cuss. (Fam. Umbelliferae).
It contains not less than 9.0% of dilute ethanol-soluble extractives, not less than 10.0% of water extractives and not less than 1.0% of osthole.

Description: Cremocarp, ellipsoidal, about 2~4 mm in length, about 1 mm in diameter. Externally grayish-yellow, with 2 outcurved persistent stylopodium at the summit. Dorsal surface of mericarps slightly protuberant, with five longitudinal ridges, commissural surface flattened, with two brown and slightly protuberant longitudinal ribs. Pericarp lax and fragile, easily rubbed off. Seed small, grayish-brown and oily. Odor, aromatic; taste, pungent, numb on chewing.

Microscopic identification:

1. **Transverse section:**
   (1) Mericarp: Slightly pentagonal, with 5 wing-shaped ridges. Exocarp composed of 1 row of epidermal cells, usually shrunken, covered with cuticle. Mesocarp composed of several rows of parenchymatous cells, containing strip-shaped reticulate cells, mostly distributed inside vascular bundles; there are 6 vittae, including 1 vitta between each 2 ridges and 2 vittae at commissural surface, vitta oblong, up to about 110 μm in length, containing yellowish-brown oil, when the fruit matured, vittae walls becoming dark brown cuticle; vascular bundles located in the center of ridge, xylem vessels subrounded or polygonal, accompanied by a few of fibers, phloem located at two sides of bundles. Endocarp composed of 1~2 rows of flat cells. Testa composed of 1 row of pale brown cells. Endosperm cells contain fatty oil and starch granules, each granules containing fine cluster crystals. Embryo round, locating in the center of endosperm, composed of parenchymatous cells, containing a few of starch granules.
2. **Powder:** Yellowish-brown. Epidermal cells of exocarp subsquare or subpolygonal in surface view, anticlinal walls undulated or wave-curved, with cutinized striations. Reticulate cells subsquare, subrounded or subrectangular, wall slightly thickened, unlignified or slightly lignified, with strip-shaped or reticulate thickenings. Fragments of vittae yellowish-brown or dark reddish-brown, some with septa, cellular trace faintly visible on the surface. Inlaid (endocarp) cells occasionally with walls moniliform thickened. Endosperm cells, fatty oil droplets and clusters of calcium oxalate also visible.

Thin layer chromatographic identification test (General rule 1010.3):

1. Sample solution: Add 1.0 g of powdered sample to 10 mL of methanol, ultrasonicate for 30 minutes, cool, filter and make up the filtrate to 10 mL.
2. Reference drug solution: Use 1.0 g of the reference drug as the same method described above.
3. Reference standard solution: Weigh accurately a quantity of osthole and dissolve in ethanol to produce a solution containing 1.0 mg per mL.
4. Procedure: Use silica gel F_{254} as the coating substance and a solution of toluene, ethyl acetate and *n*-hexane (3:3:2) as the developing solvent. Apply 10 μL of each of the above solutions to the plate. Once the top of the solvent rise to about 5~10 cm from the origin, dry in air. Examine under the ultraviolet light at 365 nm. The spots in the chromatogram obtained from the sample solution correspond in R_f values and color to the spots in the chromatogram obtained with the reference drug solution and the reference standard solution.

Impurities and other requirements:

1. Loss on drying: Not more than 12.0% under heating at 105℃ for 5 hours (General rule 5008).
2. Total ash: Not more than 13.0% (General rule 5004).
3. Acid-insoluble ash: Not more than 5.0% (General rule 5004).

Assay:

1. Osthole:
   (1) Mobile phase: A solution of acetonitrile and water (65:35). The ratio varies as required.
   (2) Reference standard solution: Weigh accurately a quantity of osthole and dissolve in ethanol to produce a solution containing 45 μg per mL.
   (3) Sample solution: Weigh accurately 0.1 g of the powdered sample, transfer to a conical flask with stopper, accurately add 25 mL of absolute ethanol, stopper tightly and weigh, stand for 2 hours, ultrasonicate for 30 minutes, cool and weigh again, replenish the loss of the weight with absolute ethanol to the initial weight and mix well. Measure accurately 5 mL of the supernatant to a 10-mL volumetric flask, add absolute ethanol to volume and mix well.
   (4) Chromatographic system: The liquid chromatography is equipped with an ultraviolet absorption photometer (wavelength: 322 nm) and a column packed with octadecylsilanized silica gel. The number of theoretical plates of the peak of osthole should not be less than 3,000.
   (5) Procedure: Inject accurately 10 μL of each of the reference standard solution and the sample solution into the liquid chromatography apparatus, and calculate the content.
2. Water extractives: Carry out the method for determination of water extractives (General rule 5006).
3. Dilute ethanol extractives: Carry out the method for determination of dilute ethanol-soluble extractives (General rule 5006).

Storage: Store in a dry place.
Usage: Deficiency-tonifying medicinal.
Dosage: 3~9 g.

CODONOPSIS RADIX
黨參
Dang Shen / Dang Shen
Pilose Asiabell Root

Pilose asiabell root is the dried root of *Codonopsis pilosula* (Franch.) Nannf., *Codonopsis pilosula* Nannf. var. *modesta* (Nannf.) L. T. Shen or *Codonopsis tangshen* Oliv. (Fam. Campanulaceae).
It contains not less than 26.0% of dilute ethanol-soluble extractives and not less than 43.0% of water extractives.

Description:

1. Root of *Codonopsis pilosula*: Long cylindrical, fusiform-cylindrical or long conical, 10~45 cm in length, 0.4~2.5 cm in diameter. Externally grayish-yellow to grayish-brown, with numerous warty protuberant stem scars and buds on the root stock gathering into spheroidal, commonly known as "Shih Zih Pan Tou", and densely transverse annulations occurring below the root stock, gradually sparse downwards. Texture soft or hard, fracture relatively even, with clefts or striated radially, bark pale yellowish-white to pale brown, wood pale yellow. Odor, slightly aromatic; taste, sweet.
2. Root of *Codonopsis pilosula* var. *modesta*: Relatively short, 10~35 cm in length, less branched. Externally yellowish-white to grayish-yellow, dense transverse annulations occurring below the root stock, frequently up to over half length of the root. Fracture more clefts, uneven, bark white to pale brown, wood pale yellow.
3. Root of *Codonopsis tangshen*: Less branched, 15~40 cm in length. Externally grayish-brown, cork often exfoliated partially, the upper part annulations relatively lax. Fracture bark thick, with less clefts. Taste, slightly sweet and sour.

Microscopic identification:

1. **Transverse section:**
   (1) Root of *Codonopsis pilosula*: Cork composed of several to dozens rows of cells, stone cells present in the outer layer of cork, singly scattered or in groups. Cortex narrow. Phloem broad, pale yellow groups of laticiferous tubes arranged alternately with sieve tubes, usually with clefts. Cambium ring distinct. Vessels singly scattered or several in groups, arranged radially in xylem. Parenchymatous cells contain inulin and few starch granules.
   (2) Root of *Codonopsis pilosula* var. *modesta*: Stone cells present in a complete ring in the outer layer of cork, composed of 2~5 rows of cells. Groups of laticiferous tubes arranged radially in the inner part of phloem, phloem rays curved in the outer part, occasionally arranged tangentially in an interrupted ring. The other characters are similar to root of *Codonopsis pilosula*.
   (3) Root of *Codonopsis tangshen*: Stone cells present in the outer layer of cork, singly scattered or several in groups, arranging in an interrupted ring. Groups of laticiferous tubes arranged irregularly. The other characters are similar to root of *Codonopsis pilosula*.
2. **Powder:**
   (1) Root of *Codonopsis pilosula*: Yellowish-white. Inulin masses slightly fan-shaped or subrounded, with radial striations on the surface. Stone cells relatively numerous, singly scattered or in groups, polygonal, rectangular or irregular, 24~25 μm in diameter, up to 120 μm in length. Vessels mainly bordered-pitted, reticulate and scalariform, 21~80 μm in diameter. Laticiferous tubes 12~15 μm in diameter, filled with oil droplets and fine granules. Cork cells rectangular or polygonal, lignified, with longitudinal striations.
   (2) Root of *Codonopsis pilosula* var. *modesta*: Pale yellow. Stone cells extremely numerous, 19~60 μm in diameter, 35~256 μm in length, pits sparse, pit canals distinct. Xylem parenchymatous cells fusiform, secondary walls reticular or scalariform thickened. Starch granules simple, spheroidal or ovate.
   (3) Root of *Codonopsis tangshen*: Off-white. Stone cells relatively few, 25~36 μm in diameter, 60~76 μm in length, occasionally the middle walls thickened, lumen dumbbell-shaped, pit canals distinct, trumpet-shaped or funnel-shaped. Parenchymatous cells fusiform, reticular or moniliform. Starch granules relatively numerous, simple granules spheroidal or subrounded, 6~20 μm in diameter, hilum dotted or indistinct; compound granules composed of 2~7 components.

Thin layer chromatographic identification test (General rule 1010.3):

1. Sample solution: Add 1.0 g of powdered sample to 25 mL of methanol, ultrasonicate for 30 minutes, filter, evaporate the filtrate to dryness, and dissolve the residue in 15 mL of water. Apply it to a column (1.5 cm in inner diameter, 10 cm in length) packed with D101 macroporous resin, elute with 50 mL of water, discard the water solution, elute again with 50 mL of 50% ethanol, collect the eluates, evaporate to dryness, dissolve the residue in 1 mL of methanol.
2. Reference drug solution: Use 1.0 g of the reference drug as the same method described above.
3. Reference standard solution: Add 10.0 mg of lobetyolin to a 10-mL volumetric flask, add methanol to volume.

4. Procedure: Use silica gel F_{254} as the coating substance and a solution of *n*-butanol, glacial acetic acid and water (7:1:0.5) as the developing solvent. Apply 2~4 μL of each of the above solutions to the plate. Once the top of the solvent rise to about 5~10 cm from the origin, dry in air. Spray with a 10% solution of sulfuric acid in ethanol (H_2SO_4/EtOH TS), heat until the spots become visible. Examine under the visible light. The spots in the chromatogram obtained from the sample solution correspond in R_f values and color to the spots in the chromatogram obtained from the reference drug solution and the reference standard solution.

Impurities and other requirements:
1. Total ash: Not more than 6.0% (General rule 5004).
2. Acid-insoluble ash: Not more than 3.0% (General rule 5004).

Assay:
1. Water extractives: Carry out the method for determination of water extractives (General rule 5006).
2. Dilute ethanol extractives: Carry out the method for determination of dilute ethanol-soluble extractives (General rule 5006).

Storage: Store in a ventilated and dry place, and protect from insects.
Usage: Deficiency-tonifying medicinal.
Dosage: 9~30 g.

COICIS SEMEN
薏苡仁
Yi Yi Ren / Yi Yi Ren
Coix Kernel

Coix kernel is the dried ripe kernel of *Coix lacryma-jobi* L. var. *ma-yuen* (Roman.) Stapf (Fam. Gramineae).

Description: Oblong, 4~8 mm in length, 3~6 mm in width. Externally milky white, smooth, occasionally with remained reddish-brown testa. Dorsal surface rounded and protruding; ventral surface with a longitudinal furrow, about 2 mm in width. One end obtusely rounded, the other end relatively broad and slightly dented with a brownish-black semi-annular scar and pale brown dotted hilum. Texture compact, fracture white and starchy. Odor, slight; taste, slightly sweet.

Microscopic identification:
1. **Powder:** Yellowish-white. Starch granules mostly aggregated into masses, simple granules rounded-polygonal, subspheroidal or ovate, 2~20 μm in diameter, hilum Y-shaped, V-shape or slit-shaped, striations indistinct; compound granules composed of 2~3 components. Endosperm cells subpolygonal, walls extremely thin and slightly curved, lumen filled with starch granules. Epidermal cells of pericarp slender, wall thin, anticlinal walls sinuous. Mesocarp cells irregularly long strip-shaped, slightly curved, wall extremely thin, with irregular intercellular spaces spongy tissue-like.

Thin layer chromatographic identification test (General rule 1010.3):
1. Sample solution: Add 1.0 g of powdered sample to 15 mL of petroleum ether (30~60℃), ultrasonicate for 30 minutes, filter, evaporate the filtrate to dryness, dissolve the residue in 1 mL of petroleum ether (30~60℃).
2. Reference drug solution: Use 1.0 g of the reference drug as the same method described above.
3. Procedure: Use silica gel F_{254} as the coating substance and a solution of petroleum ether (30~60 ℃), ethyl acetate and acetic acid (10:3:0.1) as the developing solvent. Apply 10 μL of each of the above solutions to the plate. Once the top of the solvent rise to about 5~10 cm from the origin, dry in air. Examine under the ultraviolet light at 365 nm. The spots in the chromatogram obtained from the sample solution correspond in R_f values and color to the spots in the chromatogram obtained from the reference drug solution.

Impurities and other requirements:
1. Loss on drying: Not more than 15.0% under heating at 105℃ for 5 hours (General rule 5008).
2. Total ash: Not more than 4.0% (General rule 5004).
3. Acid-insoluble ash: Not more than 2.0% (General rule 5004).

Storage: Refrigerate or store in a cool and dry place, and protect from insects.
Usage: Dampness-draining diuretic medicinal.
Dosage: 9~30 g.
Precaution and warning: Used with caution in pregnancy.

COPTIDIS RHIZOMA
黃連
Huang Lian / Huang Lian
Coptis Rhizome

Coptis rhizome is the dried rhizome of *Coptis chinensis* Franch. (Fam. Ranunculaceae) and similar species.
It contains not less than 4.2% of berberine, calculated with berberine chloride.

Description: Mostly curved, 1~5 mm in diameter, up to 4 cm in length, bearing with numerous fine rootlet or not. Apex often remained with leaf petiole. Externally yellowish-gray, with numerous protuberance. Fracture

uneven. Odorless; taste, extremely bitter, saliva dyed yellow on chewing.

Microscopic identification:

1. **Transverse section:** The outer layer was cork cells with thin walls, parenchyma outside cortex containing stone cell groups, with yellow fiber bundles near cambium. Xylem composed of yellow vessels, tracheids and xylem fibers. In the center showing huge pith, mostly hollowed. Parenchymatous cells occasionally contain stone cells.
2. **Powder:** Yellowish-brown. The fragments showing cork cells, stone cells and fibers. Vessels bordered-pitted and spiral. Parenchymatous cells yellow, without starch granules and crystals of calcium oxalate.

Thin layer chromatographic identification test (General rule 1010.3):

1. Sample solution: Add 1.0 g of powdered sample to 15 mL of methanol, ultrasonicate for 30 minutes, filter and use the filtrate.
2. Reference drug solution: Use 1.0 g of the reference drug as the same method described above.
3. Reference standard solution: Weigh accurately a quantity of berberine chloride and dissolve in methanol to produce a solution containing 1.0 mg per mL of each.
4. Procedure: Use silica gel F_{254} as the coating substance and a solution of *n*-butanol, glacial acetic acid and water (4:1:2) as the developing solvent. Apply 5 μL of each of the above solutions to the plate. Once the top of the solvent rise to about 5~10 cm from the origin, dry in air. Examine under the ultraviolet light at 365 nm. The spots in the chromatogram obtained from the sample solution correspond in R_f values and color to the spots in the chromatogram obtained from the reference drug solution and the reference standard solution.

Impurities and other requirements:

1. Total ash: Not more than 5.0% (General rule 5004).
2. Arsenic (As): Not more than 5.0 ppm (General rule 3006, 3049, 3050).

Assay:

1. Berberine chloride:
   (1) Mobile phase: Add 3.4 g potassium dihydrogen phosphate and 1.7 g sodium lauryl sulfate in a 1,000 mL solution of water and acetonitrile (1:1). The ratio varies as required.
   (2) Reference standard solution: Weigh accurately a quantity of berberine chloride and dissolve in methanol to produce a solution containing 0.1 mg per mL.
   (3) Sample solution: Weigh accurately 500.0 mg of the powdered sample, accurately add 30 mL of the solution of methanol and dilute hydrochloric acid (100:1), heat under reflux for 30 minutes, cool, filter. The residue add sequentially with 30 mL and 20 mL of methanol and dilute hydrochloric acid (100:1) as the same method described above. The finally residue add 10 mL of methanol, shake. Combine all filtrates, make up to 100 mL with methanol, and mix well.
   (4) Chromatographic system: The liquid chromatography is equipped with an ultraviolet absorption photometer (wavelength: 345 nm) and a column (4~6 mm × 15~25 cm) packed with octadecylsilanized silica gel (5~10 μm in particle diameter). The column temperature is maintained at 40℃. The retention time of berberine chloride is about 10 minute. Inject reference standard solution into the liquid chromatography apparatus for five times, and record the peak areas. The relative standard deviation of the peak area of berberine chloride should not be more than 1.5%.
   (5) Procedure: Inject accurately 20 μL of each of the reference standard solution and the sample solution into the liquid chromatography apparatus, and calculate the content.

Storage: Store in a ventilated and dry place.
Usage: Stomach-invigorating medicinal.
Dosage: 2~5 g for the usual dose.

CORDYCEPS
冬蟲夏草
Dong Chong Sia Cao / Dong Chong Xia Cao
Chinese Caterpillar Fungus

Chinese caterpillar fungus is a composite consisting of the stroma of the fungus, *Cordyceps sinensis* (Berk.) Sacc. (Fam. Clavicipitaceae), parasitized on the larva and the dead caterpillar of some species of insects (Fam. Hepialidae).
It contains not less than 0.01% of adenosine.

Description: A dead caterpillar jointed with a stroma growing in the head of the larva. The caterpillar resembling a silkworm, 3~5 cm in length, 3~8 mm in diameter; externally dark yellow to yellowish-brown, with 20~30 annulations, 8 pairs of feet in the abdomen, 4 pairs of the feet in the middle relatively conspicuous. Stroma one or 2~3, slender and cylindrical, slightly tortuous, slightly swollen above, 4~7 cm in length, rare up to 11 cm in length, about 3 mm in diameter; externally grayish-brown or dark brown, with fine longitudinal wrinkles. Caterpillar texture fragile, fracture whitish; stroma texture relatively tenacious, fracture

whitish, fibrous. Odor, slightly fleshly; taste, slightly bitter.

Microscopic identification:

1. **Transverse section:**
   (1) Head of stroma: Perithecia born near surface, base fell into asci, oblong to ovoid, 273~550 μm in length, 140~245 μm in diameter, perithecia contains numerous ascus. Asci slender, 240~485 μm in length, 12~16 μm in diameter, wall thickened on the apex, containing a narrow linear-shaped hole in the center; Asci composed of 2~4 ascospores, spores linear-shaped, 160~470 μm in length, 5~6.5 μm in diameter, with numerous transverse septa.

Thin layer chromatographic identification test (General rule 1010.3):

1. Sample solution: Take a quantity of coarse powdered sample, defat with ethyl ether, extract with ethanol, and evaporate the extraction.
2. Reference drug solution: Use a reference drug as the same method described above.
3. Procedure: Use silica gel F_{254} as the coating substance and a solution of *n*-butanol, acetic acid and water (4:1:6) as the developing solvent. Apply appropriate amount of each of the above solutions to the plate. Once the top of the solvent rise to about 5~10 cm from the origin, dry in air. Spray with a 0.5% solution of potassium periodate (Potassium Periodate TS) and 0.5% solution of benzidine in ethanol (Benzidine/EtOH TS), examine under ultraviolet light at 365 nm. The spots in the chromatogram obtained from the sample solution correspond in R_f values and color to the spots in the chromatogram obtained from the reference drug solution.

Assay:

1. Adenosine:
   (1) Mobile phase: A solution of phosphate (pH 6.5) [add 68.5 mL of 0.01 mol/L sodium dihydrogen phosphate solution to 31.5 mL of 0.01 mol/L disodium hydrogen phosphate solution, and mix well (pH 6.5)] and methanol (17:3).
   (2) Reference standard solution: Weigh accurately a quantity of adenosine and dissolve in 90% methanol to produce a solution containing 20 μg per mL.
   (3) Sample solution: Weigh accurately 0.5 g of powdered sample to a conical flask with stopper, accurately add 10 mL of 90% methanol, stopper tightly, mix well and weigh, heat under reflux for 30 minutes, cool, and weigh again, replenish the loss weight with 90% methanol, mix well, filter, and use the successive filtrate.
   (4) Chromatographic system: The liquid chromatography is equipped with an ultraviolet absorption photometer (wavelength: 260 nm) and a column (4~6 mm × 15~25 cm) packed with octadecylsilanized silica gel (ODS or the similar ODS column) (5~10 μm in particle diameter). The column temperature is maintained at room temperature. Inject reference standard solution into the liquid chromatography apparatus for five times, and record the peak areas. The relative standard deviation of the peak area of adenosine should not be more than 2.0%. The ratio varies as required. The number of theoretical plate of the column not less than 2,000, calculated with the reference to the peak of adenosine.
   (5) Procedure: Inject accurately 10 μL of each of the reference standard solution and the sample solution into the liquid chromatography apparatus, and calculate the content.

Storage: Refrigerate or store in a cool and dry place, and protect from moisture, mold and insects.
Usage: Tonifying and replenishing medicinal (Yang-assisting medicinal).
Dosage: 3~10 g.

CORNI SARCOCARPIUM
山茱萸
Shan Jhu Yu / Shan Zhu Yu
Cornus Sarcocarp

Cornus sarcocarp is the dried ripe sarcocarp of *Cornus officinalis* Sieb. et Zucc. (Fam. Cornaceae).
It contains not less than 35.0% of dilute ethanol-soluble extractives, not less than 50.0% of water extractives and not less than 0.6% of loganin.

Description: Irregularly flaky or flattened cylindrical, broken, shrunken, incomplete shape. Purplish-red as fresh, color alter to purplish-black after long term storage. Externally shrunken, lustrous, occasionally with a scar of fruit stalk at the base. Texture soft and not easily broken, inner surfuce colored pale, not smooth. Odorless; taste astringent and slightly bitter.

Microscopic identification:

1. **Transverse section:** Exocarp composed of 1 layer of slightly flat cells, covered by relatively thick cuticle. Mesocarp broad, composed of numerous rows of parenchymatous cells varying in size, some cells contain dark brown pigment masses. 8 Vascular bundles, arranged in an interrupted ring on the inner side, with existence of stone cells and fiber bundles near stalk.

2. **Powder:** Reddish-brown. Epidermal cells of exocarp polygonal or subrectangular at surface, 16~30 μm in diameter, anticlinal walls slightly moniliform thickened, outer periclinal walls granularly cutinized and thickened, lumen containing pale orange-yellow contents. Mesocarp cells orange-brown, mostly shrunken. Stone cells subsquare, existed in mesocarp near stalk, ovoid or rectangular in shape, usually with distinct pits and large lumen (exist in mesocarp near the stalk). Clusters of calcium oxalate rare, 12~32 μm in diameter.

Thin layer chromatographic identification test (General rule 1010.3):

1. Sample solution: Add 1.0 g of powdered sample to 10 mL of ethanol, shake for 5 minutes, filter and use the filtrate.
2. Reference drug solution: Use 1.0 g of the reference drug as the same method described above.
3. Reference standard solution: Weigh accurately a quantity of loganin and dissolve in ethanol to produce a solution containing 0.5 mg per mL.
4. Procedure: Use silica gel F_{254} as the coating substance and a solution of ethyl acetate, water and formic acid (6:1:1) as the developing solvent. Apply 10 μL of each of the above solutions to the plate. Once the top of the solvent rise to about 5~10 cm from the origin, dry in air. Spray with a 10% solution of sulfuric acid in ethanol (H_2SO_4/EtOH TS), and heat at 105℃ until the spots become visible. The spots in the chromatogram obtained from the sample solution correspond in R_f values and color to the spots in the chromatogram obtained from the reference drug solution and the reference standard solution.

Impurities and other requirements:

1. Foreign matter: Not more than 2.0%, including pedicels (General rule 5003).
2. Total ash: Not more than 6.0% (General rule 5004).
3. Acid-insoluble ash: Not more than 1.0% (General rule 5004).
4. Pesticide residues:
   (1) The total DDT content: Not more than 0.2 ppm (General rule 3052).
   (2) The total BHC content: Not more than 0.2 ppm (General rule 3052).
5. Aflatoxins: Not more than 15.0 ppb (General rule 3053).

Assay:

1. Loganin:
   (1) Mobile phase: A solution of 0.05 mol/L sodium dihydrogen phosphate solution and acetonitrile (6:1). The ratio varies as required.
   (2) Reference standard solution: Weigh accurately 10 mg of loganin and dissolve in 50% methanol to produce a 100 mL solution.
   (3) Sample solution: Weigh accurately 0.5 g of powdered sample, transfer to a conical flask with stopper, accurately add 30 mL of 50% methanol, ultrasonicate for 15 minutes, takes the supernatant. To the residue add 30 mL of 50% methanol, operate the same method as above, combine all supernatants, add 50% methanol to 100 mL.
   (4) Chromatographic system: The liquid chromatography is equipped with an ultraviolet absorption photometer (wavelength: 240 nm) and a column (6.0 mm × 15 cm) packed with octadecylsilanized silica gel (5~10 μm in particle diameter). The column temperature is maintained at 40℃. Inject reference standard solution into the liquid chromatography apparatus for five times, and record the peak areas. The relative standard deviation of the peak area of loganin should not be more than 1.5%.
   (5) Procedure: Inject accurately 10 μL of each of the reference standard solution and the sample solution into the liquid chromatography apparatus, and calculate the content.
2. Water extractives: Carry out the method for determination of water extractives (General rule 5006).
3. Dilute ethanol extractives: Carry out the method for determination of dilute ethanol-soluble extractives (General rule 5006).

Storage: Refrigerate or store in a cool and dry place, and protect from insects.
Usage: Tonifying and replenishing medicinal (Yin-tonifying medicinal).
Dosage: 6~12 g.

CORYDALIS RHIZOMA
延胡索
Yan Hu Suo / Yan Hu Su
Corydalis Tuber

Corydalis tuber is the dried tuber of *Corydalis yanhusuo* W. T. Wang (Fam. Papaveraceae).
It contains not less than 11.0% of dilute ethanol-soluble extractives, not less than 9.0% of water extractives and not less than 0.07% of dehydrocorydaline.

Description: Irregularly oblate, 0.3~2 cm in diameter. Externally grayish-yellow or yellowish-brown, irregularly reticulate wrinkles. Apex with slight dented stem scar, base dented as hilum-like or conical protuberances. Texture hard, fracture yellow, horny, waxy-sheeny. Odor, slight; taste, bitter.

Microscopic identification:

1. **Transverse section:**
   (1) 1/3 upper portion of the tuber: Cork composed of over 10 layers of flat cells, pale yellow, scattered with 2~3 layers of sclerenchymatous cells at outer side, walls lignified and slightly thickened, with dense pits. Phloem broad, sieve tubes and laticiferous tubes intermittently arranged in several ring; treated with Sudan III, the contents of laticiferous tube showing red color. Xylem vessels fine, arranged in a ring. Pith in the center.
   (2) Central part of the tuber: Xylem usually 4~7 in a bundle and arranged in a ring.
   (3) Small spheroidal-shaped tubers adhered to the rhizome: Xylem usually 2~4 in a bundle, arranged sparsely in a ring. Parenchymatous cells filled with starch gelatinous masses. Stone cells subpolygonal, long-rounded or long-polygonal, grouped in few or scattered in cortex of stem scars.
2. **Powder:** Greenish-yellow. Parenchymatous cells filled with starch gelatinous masses. Sclerenchymatous cells of cortex long strip-shaped, walls lignified and slightly thickened, with dense pits. Stone cells (in the cortex of stem scars) subpolygonal, long-rounded or long-polygonal, 88~160 μm in length. Vessels mostly spiral, reticulate rare.

Thin layer chromatographic identification test (General rule 1010.3):

1. Sample solution: Take 1.0 g of powdered sample to a round-bottom flask, add 10 mL of methanol, heat under reflux for 30 minutes, cool, filter and make up the filtrate to 10 mL.
2. Reference drug solution: Use 1.0 g of the reference drug as the same method described above.
3. Reference standard solution: Weigh accurately a quantity of tetrahydropalmatine and dissolve in methanol to produce a solution containing 0.5 mg per mL.
4. Procedure: Use silica gel F_{254} as the coating substance and a solution of toluene and acetone (9:2) as the developing solvent. Apply 5 μL of each of the above solutions to the plate. Once the top of the solvent rise to about 5~10 cm from the origin, dry in air and expose to iodine vapor for 3 minutes. After expelling the iodine absorbed, examine the ultraviolet light at 365 nm. The spots in the chromatogram obtained from the sample solution correspond in R_f values and color to the spots in the chromatogram obtained from the reference drug solution and the reference standard solution.

Impurities and other requirements:

1. Loss on drying: Not more than 13.0% under heating at 105℃ for 5 hours (General rule 5008).
2. Total ash: Not more than 3.0% (General rule 5004).
3. Acid-insoluble ash: Not more than 1.0% (General rule 5004).
4. Total heavy metals: Not more than 10.0 ppm (General rule 3005).
5. Arsenic (As): Not more than 5.0 ppm (General rule 3006, 3049, 3050).
6. Aflatoxins: Not more than 15.0 ppb (General rule 3053).

Assay:

1. Dehydrocorydaline nitrate:
   (1) Mobile phase: Dissolve 17.91 g of $Na_2HPO_4 \cdot 12H_2O$ in 970 mL of water and adjust pH value to 2.2 with phosphoric acid, dissolve 14.05 g of sodium perchlorate, add water to 1,000 mL, add 450 mL of acetonitrile and dissolve 0.2 g of sodium lauryl sulfate solvent.
   (2) Reference standard solution: Place in silica gel for more than 1 hour. Weigh accurately 10 mg of dehydrocorydaline nitrate and dissolve in a solution of methanol and dilute hydrochloric acid (3:1) to produce a 200 mL solution.
   (3) Sample solution: Weigh accurately 1.0 g of powdered sample add 30 mL of a solution of methanol and dilute hydrochloric acid (3:1), heat under reflux for 30 minutes, cool then filter, add 15 mL of a solution of methanol and dilute hydrochloric acid (3:1) to the residue, operate as above, combine the filtrate and make up the filtrate to 50 mL with a solution of methanol and dilute hydrochloric acid (3:1).
   (4) Chromatographic system: The liquid chromatography is equipped with an ultraviolet absorption photometer (wavelength: 340 nm) and a column (4.6 mm × 15 cm) packed with octadecylsilanized silica gel (5 μm in particle diameter). The column temperature is maintained at 40℃. The retention time of dehydrocorydaline nitrate is about 24 minute. Inject accurately 5 μL of reference standard solution into the liquid chromatography apparatus for five times, and record the peak areas. The relative standard deviation of the peak area of dehydrocorydaline nitrate should not be more than 1.5%.
   (5) Procedure: Inject accurately 5 μL of each of the reference standard solution and the sample solution into the liquid chromatography apparatus, and calculate the content.
2. Water extractives: Carry out the method for determination of water extractives (General rule 5006).

3. Dilute ethanol extractives: Carry out the method for determination of dilute ethanol-soluble extractives (General rule 5006).

Storage: Refrigerate or store in a cool and dry place, and protect from insects.
Usage: Blood-regulating medicinal (Blood-activating and stasis-dispelling medicinal).
Dosage: 3~10 g for decocting, 1.5~3 g for powdering.

CRATAEGI FRUCTUS
山楂
Shan Jha / Shan Zha
Hawthorn Fruit

Hawthorn fruit is the dried ripe fruit of *Crataegus pinnatifida* Bunge or *Crataegus pinnatifida* Bunge var. *major* N. E. Br. (Fam. Rosaceae).
It contains not less than 35.0% of dilute ethanol-soluble extractives, not less than 30.0% of water extractives and not less than 5.0% of organic acids, calculated with citric acid.

Description:
1. Fruit of *Crataegus pinnatifida*: Spheroidal, 1~1.5 cm in diameter, externally brownish-red, with small spots, apex with persistent calyx, base with slender stalk. Texture hard. Sliced pieces rounded, 1~2.5 cm in diameter, 2~4 mm thick, externally red, wrinkled, with small grayish-white spots; sarcocarp dark yellow to pale brown. In cross section, seeds 5, pale yellow, mostly fallen off and loculus hollow, some remained with a short and slender fruit stalk or calyx. Odor, slightly aromatic; taste, slightly sour.
2. Fruit of *Crataegus pinnatifida* var. *major*: Subspheroidal, 1~2.5 cm in diameter, externally dark red or purplish-red, wrinkled, lustrous, with small grayish-white spots. Apex dented, with persistent calyx at the edge, base with slender fruit stalk or its scar. Seeds 5, arched, pale reddish brown. Odor, slightly aromatic; taste, slightly sour and sweet.

Microscopic identification:
1. **Powder:**
   (1) Fruit of *Crataegus pinnatifida*: Reddish-brown. Stone cells subrounded, ovate, elongated-rectangular, subpolygonal or subtriangle in shape, 25~92 μm in diameter, up to 176 μm long, the wall up to 20 μm thick, containing brown or orange-red contents. Clusters of calcium oxalate 17~54 μm in diameter; prisms of calcium oxalate 13~47 μm in diameter. Fibers 13~27 μm in diameter, with relatively thin or extremely thick walls. Epidermal cells of exocarp contain yellowish-brown or reddish-brown contents. Parenchymatous cells of pulp and starch granules also exist.
   (2) Fruit of *Crataegus pinnatifida* var. *major*: Dark brown. Stone cells subrounded, elongated-rounded, rounded-polygonal, elongated-rectangular, subtriangle or irregular in shape, 18~173 μm in diameter, up to 185 μm long, the wall up to 53 μm thick, striations distinct, lumen small, occasionally with orange-yellow contents. Clusters of calcium oxalate 27~41 μm in diameter, angles blunt; prisms of calcium oxalate 13~52 μm in diameter. Parenchymatous cells of pulp shrunken (original receptacle), cell boundary indistinct, containing brown contents, starch granules and prims of calcium oxalate usually embedded. Fibers occasionally cross-overlapping in bundles, 11~36 μm in diameter, the walls extremely thick with longitudinal fissures. Epidermal cells of exocarp contain brown or orange-red contents, the cuticle up to 18 μm thick in sectional view.

Thin layer chromatographic identification test (General rule 1010.3):
1. Sample solution: Add 1.0 g of powdered sample to 4 mL of ethyl acetate, ultrasonicate for 15 minutes, filter and use the filtrate.
2. Reference drug solution: Use 1.0 g of the reference drug as the same method described above.
3. Reference standard solution: Weigh accurately a quantity of ursolic acid and dissolve in methanol to produce a solution containing 1.0 mg per mL.
4. Procedure: Use silica gel F_{254} as the coating substance and a solution of toluene, ethyl acetate and formic acid (20:4:0.5) as the developing solvent. Apply 4 μL of each of the above solutions to the plate. Once the top of the solvent rise to about 5~10 cm from the origin, dry in air. Spray with a 10% solution of sulfuric acid in ethanol (H_2SO_4/EtOH TS) and heat at 80℃ until the spots become visible. Examine under visible light and ultraviolet light at 365 nm. The spots in the chromatogram obtained from the sample solution correspond in R_f values and color to the spots in the chromatogram obtained with the reference drug solution and the reference standard solution.

Impurities and other requirements:
1. Total ash: Not more than 3.0% (General rule 5004).
2. Acid-insoluble ash: Not more than 0.5% (General rule 5004).
3. Aflatoxins: Not more than 15.0 ppb (General rule 3053).

Assay:

1. Organic acids (Calculated with citric acid.):
   (1) Sample solution: Weigh accurately 1.0 g of fine powdered sample, accurately add 100 mL of water, soak for 4 hours with occasional shaking, filter and use the filtrate.
   (2) Procedure: Weigh accurately 25 mL of filtrate, add 50 mL of water and 2 drops of phenolphthalein, titrate with sodium hydroxide (0.1 mol/L) and calculate the content. Each mL of sodium hydroxide (0.1 mol/L) is equivalent to 6.404 mg of citric acid. It contains not less than 5.0% of organic acid, calculated with citric acid of the dried one.
2. Water extractives: Carry out the method for determination of water extractives (General rule 5006).
3. Dilute ethanol extractives: Carry out the method for determination of dilute ethanol-soluble extractives (General rule 5006).

Storage: Store in a ventilated and dry place, and protect from insects.
Usage: Disgestant medicinal.
Dosage: 9~12 g.
Precaution and warning: Used with caution in peptic ulcer.

CROCI STIGMA
番紅花
Fan Hong Hua / Fan Hong Hua
Saffron Stigma

Saffron stigma is the dried stigma of *Crocus sativus* L. (Fam. Iridaceae).
It contains not less than 50.0% of dilute ethanol-soluble extractives, not less than 43.0% of water extractives and not less than 10.0% of the total amount of crocin I and crocin II.

Description: Linear, dark red, about 2~3 cm in length, the upper part broader funnel-shaped, the margin of apex irregularly dentate and with protuberant tomenta. Texture light, easily broken, spread with yellow pigment when floating on water. Odor, characteristic; taste, slightly bitter.

Microscopic identification:

1. **Powder:** Orange-red. Epidermal cells long strip-shaped in surface view, wall thin, some cells with outer walls papillary or tomentose-shaped protuberance, fine striations faintly visible on the surface, subsquare or subrounded in sectional view, some parts with papillary protuberance. Epidermal cells of apex of stigma tomentose-shaped, mostly broken, 90~140 μm in length, 25~55 μm in diameter, walls 20 μm thick. Vessels mainly spiral or annular, about 12 μm in diameter. Pollen grains spheroidal, pale yellow, 70~200 μm in diameter, with spiny glyph on the surface. Crystals of calcium oxalate cluster-shaped, fusiform or subsquare, 2~10 μm in diameter, mostly exist in parenchymatous cells.

Thin layer chromatographic identification test (General rule 1010.3):

1. Sample solution: Add 1.0 g of powdered sample to 10 mL of ethanol, ultrasonicate for 30 minutes, filter and make up the filtrate to 10 mL.
2. Reference drug solution: Use 1.0 g of the reference drug as the same method described above.
3. Procedure: Use silica gel F_{254} as the coating substance and a solution of *n*-butanol, water and glacial acetic acid (7:2:1) as the developing solvent. Apply 5 μL of each of the above solutions to the plate. Once the top of the solvent rise to about 5~10 cm from the origin, dry in air. Examine under the ultraviolet light at 254 nm. The spots in the chromatogram obtained from the sample solution correspond in R_f values and color to the spots in the chromatogram obtained from the reference drug solution.

Impurities and other requirements:

1. Loss on drying: Not more than 14.0% under heating at 105℃ for 5 hours (General rule 5008).
2. Total ash: Not more than 9.0% (General rule 5004).
3. Acid-insoluble ash: Not more than 4.0% (General rule 5004).

Assay:

1. Crocin I and crocin II:
   (1) Mobile phase: A solution of methanol and water (45:55).
   (2) Reference standard solution: Place crocin I and crocin II in a phosphorus pentoxide dryer at 50°C, and depressurize (below 5 mm Hg) for 12 hours, and dissolve in ethanol to produce a solution containing 30 μg and 12 μg per mL of each.
   (3) Sample solution: Weigh accurately 10.0 mg of the powdered sample, transfer to a 50-mL brown volumetric flask, add a quantity of ethanol, ultrasonicate for 20 minutes, maintained at room temperature, add dilute ethanol to volume, mix well and filter, use the successive filtrate.
   (4) Chromatographic system: The liquid chromatography is equipped with an ultraviolet absorption photometer (wavelength: 440 nm) and a column packed with octadecylsilanized silica gel. The column temperature is maintained at room temperature. Inject reference standard solution into the liquid chromatography apparatus for five times, and record the peak areas. The relative standard deviation of the

peak area of crocin I and crocin II should not be more than 1.5%.

(5) Procedure: Inject accurately the same amount of each of the reference standard solution and the sample solution into the liquid chromatography apparatus, and calculate the content.

2. Water extractives: Carry out the method for determination of water extractives (General rule 5006).
3. Dilute ethanol extractives: Carry out the method for determination of dilute ethanol-soluble extractives (General rule 5006).

Storage: Store in a cool and dry place and preserve in a well-closed container, and protect from moisture and insects.
Usage: Blood-regulating medicinal (Blood-activating and stasis-dispelling medicinal).
Dosage: 3~9 g.
Precaution and warning: Used with caution in pregnancy.

CROTONIS SEMEN
巴豆
Ba Dou / Ba Dou
Croton Seed

Croton seed is the dried ripe seed of *Croton tiglium* L. (Fam. Euphorbiaceae).
It contains among 40.0~60.0% of croton oil.

Description: Ellipsoidal, slightly flattened, 1.2~1.5 cm in length, 0.7~1.0 cm in diameter; externally brown or grayish-brown, easily exfoliated to expose the black inner; with a pointed hilum and a caruncle scar at the one end, a slightly dented chalaza at other end, and a protuberant raphe between two ends; testa thin and fragile, perisperm white and membranous, endosperm yellowish-white, oily; cotyledons 2, thinner. Odorless, taste pungent.

Microscopic identification:

1. **Transverse section:** Testa composed of brown or dark brown sclerenchyma palisade cells, column-shaped, 5~30 μm wide, 162~432 μm in length; some cells contain dark brown contents, with obtusely rounded cell end; inner part composed of parenchyma palisade cells, tangentially elongated, subrectangular or suboblong, 55~100 μm in length, 5~40 μm in diameter, containing subtriangle intercellular spaces. Cells of endosperm subrounded, 15~40 μm in diameter, containing starch granules, fatty oil droplets and clusters of calcium oxalate. Cells of cotyledon subrounded to suboblong, with starch granules, fatty oil droplets and clusters of calcium oxalate, 5~40 μm in diameter.
2. **Powder:** Dark brown. Sclerenchyma palisade cells of testa (outer epidermis of endotesta) composed of 1 row of cells, brown or dark brown, column-shaped in sectional view, slightly curved, with endings smooth or obtusely rounded, 162~432 μm in length, the walls extremely thickened, pit canals very fine and dense, lumen linear, some cells contain dark brown contents; polygonal in surface view. Parenchyma palisade cells of testa (inner epidermis of testa) consists of 1 layer of cells, subrectangular in sectional view, 63~90 μm in length, the walls slightly thickened, radial wall undulate; subrounded in surface view, with subtriangle intercellular spaces, large and distinct. Epidermal cells of testa (outer epidermis of testa) pale yellow, polygonal in surface view, with irregular striations, lumen containing brown contents or granules; oblong in sectional view, covered with cuticle. Endosperm and cotyledon cells filled with aleurone granules, crystalloid or spheroid, also containing fatty oil droplets; occasionally containing clusters of calcium oxalate, 7~31 μm in diameter and shedding perisperm tissue.

Thin layer chromatographic identification test (General rule 1010.3):

1. Sample solution: Triturate a quantity of the kernels to powder. Add 0.1 g of powdered sample to 10 mL of petroleum ether (30~60℃), ultrasonicate for 20 minutes, filter and use the filtrate.
2. Reference drug solution: Use 0.1 g of the reference drug as the same method described above.
3. Procedure: Use silica gel F_{254} as the coating substance and a solution of petroleum ether (30~60 ℃), ethyl acetate and formic acid (10:1:0.5) as the developing solvent. Apply 10 μL of the sample solution and 4 μL of the reference drug solution to the plate. Once the top of the solvent rise to about 5~10 cm from the origin, dry in air. Spray with a 10% solution of sulfuric acid in ethanol (H_2SO_4/EtOH TS) and heat at 105℃ until the spots become visible. The spots in the chromatogram obtained from the sample solution correspond in R_f values and color to the spots in the chromatogram obtained from the reference drug solution.

Assay:

1. Fatty oil:
   Weigh accurately 5.0 g of the coarse powdered sample, grind, transfer to a Soxhlet extractor, heat under reflux with ethyl ether until the fatty oil fully extracted; evaporate ethyl ether, dry the residue for 1 hour at 100℃, cool, weigh accurately, calculate the content of fatty oil.

Storage: Store in a cool and dry place.
Usage: Purgative medicinal (Offensive purgative and water-expelling medicinal).

Dosage: 0.1~0.3 g, used after made into Crotonis Semen Pulveratum.
Precaution and warning: Unprocessed one highly toxic, store with caution and used an appropriate amount for external use. Forbidden during pregnancy. Incompatible with Pharbitidis Semen.

CURCULIGINIS RHIZOMA
仙茅
Sian Mao / Xian Mao
Common Curculigo Rhizome

Common curculigo rhizome is the dried rhizome of *Curculigo orchioides* Gaertn. (Fam. Amaryllidaceae).
It contains not less than 18.0% of dilute ethanol-soluble extractives, not less than 18.0% of water extractives and not less than 0.10% of curculigoside.

Description: Cylindrical, slightly curved, 3~10 cm in length, 3~8 mm in diameter. Externally blackish-brown or brown, with longitudinal wrinkles, transverse ring patterns, and dented fibrous root scars. Texture hard, easily broken, fracture yellowish-brown, a dark ring pattern in the center, vascular bundle punctate on inner side. Odor, pungent and aromatic; taste, slightly bitter and pungent.

Microscopic identification:
1. **Transverse section:** Cork composed of 5~7 layers of subsquare cells. Cortex broad, composed of parenchymatous cells and mucilage cells, some outer cells at outside containing prisms of calcium oxalate. Parenchymatous cells contain numerous starch granules and distinct intercellular spaces, cells subrounded or polygonal. Mucilage cells subrounded, 100~300 μm in diameter, containing mucilage contents and raphides of calcium oxalate. Vascular bundles scattered, amphivasal or collateral. Vessels mainly spiral, annular or reticulate, 8~30 μm in diameter.
2. **Powder:** Yellowish-brown. Cork cells brown, polygonal or subsquare. Parenchymatous cells filled with abundant starch granules, intercellular spaces distinct. Mucilage cells contain mucilage cells and raphides of calcium oxalate, 60~200 μm in length. Starch granules individual or compound, simple granules subrounded, 5~20 μm in diameter. Vessels mainly spiral, annular or reticulate, pale yellow, 8~30 μm in diameter.

Thin layer chromatographic identification test (General rule 1010.3):
1. Sample solution: Add 2.0 g of powdered sample to 20 mL of ethanol, heat and reflux for 30 minutes, filter and evaporate the filtrate to dryness, dissolve the residue in 1 mL of ethyl acetate.
2. Reference drug solution: Use 2.0 g of the reference drug as the same method described above.
3. Reference standard solution: Weigh accurately a quantity of curculigoside and dissolve in ethyl acetate to produce a solution containing 0.5 mg per mL.
4. Procedure: Use silica gel F_{254} as the coating substance and a solution of ethyl acetate, methanol and formic acid (10:1:0.1) as the developing solvent. Apply 2 μL of each of the above solutions to the plate. Once the top of solvent rise to about 5~10 cm from the origin, dry in air. Spray with a solution of vanillin in sulfuric acid (Vanillin/H_2SO_4 TS) and heat at 105℃ until the spots become visible. The spots in the chromatogram obtained from the sample solution correspond in R_f values and color to the spots in the chromatogram obtained from the reference drug solution and the reference standard solution.

Impurities and other requirements:
1. Loss on drying: Not more than 13.0% under heating at 105℃ for 5 hours (General rule 5008).
2. Total ash: Not more than 11.0% (General rule 5004).
3. Acid-insoluble ash: Not more than 2.0% (General rule 5004).

Assay:
1. Curculigoside:
   (1) Mobile phase: A solution of acetonitrile and 0.1% phosphoric acid (21:79). The ratio varies as required.
   (2) Reference standard solution: Weigh accurately a quantity of curculigoside and dissolve in methanol to produce a solution containing 70 μg per mL.
   (3) Sample solution: Weigh accurately 1.0 g of powdered sample add accurately 50 mL of methanol, accurately weigh, heat and reflux for 2 hours, cool, weigh again, replenish the loss weight with methanol, transfer to a 10-mL volumetric flask, add methanol to volume and mix well, filter and use the successive filtrate.
   (4) Chromatographic system: The liquid chromatography is equipped with an ultraviolet absorption photometer (wavelength: 285 nm) and a column packed with octadecylsilanized silica gel. The number of theoretical plates of the peak of curculigoside should not be less than 3,000.
   (5) Procedure: Inject accurately 10 μL of each of the reference standard solution and the sample solution into the liquid chromatography apparatus, and calculate the content.
2. Water extractives: Carry out the method for determination of water extractives (General rule 5006).

3. Dilute ethanol extractives: Carry out the method for determination of dilute ethanol-soluble extractives (General rule 5006).

Storage: Store in a cool and dry place, and protect from moisture.
Usage: Yang-tonifying medicinal.
Dosage: 3~9 g.

CURCUMAE LONGAE RHIZOMA
薑黃
Jiang Huang / Jiang Huang
Turmeric Rhizome

Turmeric rhizome is the dried rhizome of *Curcuma longa* L. (Fam. Zingiberaceae).
It contains not less than 7.0% of dilute ethanol-soluble extractives, not less than 5.0% of water extractives, not less than 1.0% of curcumin and not less than 7.0% (v/w) of volatile oil.

Description: Irregularly oval, cylindrical or fusiform, curved and branched in Y-shape, 2~5 cm in length, 1~3 cm in diameter. Externally dark yellowish-brown, rough, with longitudinal wrinkles and distinct annulations of leaves scars, and exhibiting rounded scars of branched rhizomes and fibrous root scars. Texture compact, uneasily broken, fracture brownish-yellow, horny with wax luster, endodermis ring distinct, scattered with dotted vascular bundles. Odor, aromatic; taste, bitter and pungent.

Microscopic identification:
1. **Transverse section:** Cork composed of 2~5 layers of cork cells or with broken scars, cells subrectangular or subpolygonal. Parenchymatous cells of cortex suboblong or irregular, occasionally with intercellular spaces, cells usually contain yellow secretions, vascular bundles scattered; starch granules visible, subrounded, subrectangular or subpolygonal, prisms of calcium oxalate also visible, 5~10 μm in diameter, subrectangular or subsquare. Endodermal cells irregular, subrectangular or shrunken. Stele scattered with collateral vascular bundles, vessels 5~8, reticulate, spiral and scalariform, 15~90 μm in diameter, cells larger near the center, subrounded or suboblong.
2. **Powder:** Yellow to light yellow. Parenchymatous cells suboblong, containing starch granules, a few of parenchymatous cells filled with yellow to greenish-yellow secretions. Vessels reticulate, spiral and scalariform vessels also visible. Cork cells pale yellow to yellowish-brown. Prisms of calcium oxalate present in parenchymatous cells. Unicellular non-glandular hairs visible.

Thin layer chromatographic identification test (General rule 1010.3):
1. Sample solution: Add 1.0 g of powdered sample to 15 mL of methanol, ultrasonicate for 30 minutes, filter and use the filtrate.
2. Reference drug solution: Use 1.0 g of the reference drug as the same method described above.
3. Reference standard solution: Weigh accurately a quantity of curcumin and dissolve in methanol to produce a solution containing 1.0 mg per mL.
4. Procedure: Use silica gel F_{254} as the coating substance and a solution of toluene, ethyl acetate and methanol (8:1:1) as the developing solvent. Apply 10 μL of each of the above solutions to the plate. Once the top of the solvent rise to about 5~10 cm from the origin, dry in air. The spots in the chromatogram obtained from the sample solution correspond in R_f values and color to the spots in the chromatogram obtained from the reference drug solution and the reference standard solution.

Impurities and other requirements:
1. Total ash: Not more than 7.0% (General rule 5004).
2. Acid-insoluble ash: Not more than 4.0% (General rule 5004).

Assay:
1. Curcumin:
   (1) Mobile phase: A solution of acetonitrile and 0.4% glacial acetic acid (48:52). The ratio varies as required.
   (2) Reference standard solution: Weigh accurately a quantity of curcumin and dissolve in methanol to produce a solution containing 0.01 mg per mL.
   (3) Sample solution: Weigh accurately 0.2 g of the powdered sample, transfer to a conical flask with stopper, accurately add 10 mL of methanol, weigh, heat under reflux for 30 minutes, cool, weigh again, replenish the loss of the weight with methanol, mix well, centrifuge, take 1 mL of the supernatant to 20-mL volumetric flask, and add methanol to volume.
   (4) Chromatographic system: The liquid chromatography is equipped with an ultraviolet absorption photometer (wavelength: 430 nm) and a column packed with octadecylsilanized silica gel. The number of theoretical plates of the peak of curcumin should not be less than 4,000.
   (5) Procedure: Inject accurately 20 μL of each of the reference standard solution and the sample solution into the liquid chromatography apparatus, and calculate the content.
2. Water extractives: Carry out the method for determination of water extractives (General rule 5006).
3. Dilute ethanol extractives: Carry out the method for determination of dilute ethanol-soluble

extractives (General rule 5006).

4. Volatile oil: Carry out the method for determination of volatile oil (General rule 5007).

Storage: Refrigerate or store in a cool and dry place.
Usage: Blood-regulating medicinal (Blood-activating and stasis-dispelling medicinal).
Dosage: 3~10 g.

CURCUMAE RADIX
鬱金
Yu Jin / Yu Jin
Curcuma Root Tuber

Curcuma root tuber is the dried root tuber of *Curcuma wenyujin* Y. H. Chen et C. Ling, *Curcuma kwangsiensis* S. G. Lee et C. F. Liang, *Curcuma longa* L. or *Curcuma phaeocaulis* Val. (Fam. Zingiberaceae). According to the different localities and types, the former two are commonly known as "Wun Yu Jin" and "Guei Yu Jin". The others are commonly known as "Huang Sih Yu Jin" and "Lyu Sih Yu Jin", according to the different appearance.
It contains not less than 4.0% of dilute ethanol-soluble extractives and not less than 4.0% of water extractives.

Description:

1. Root tuber of *Curcuma wenyujin* (Wun Yu Jin): Oblong or ovate, slightly flattened, the two ends tapering, 3~7 cm in length, 1~2.5 cm in diameter. Externally grayish-brown, with irregular longitudinal wrinkles or reticulated fine wrinkles. Texture compact, fracture grayish-brown or brownish-black, with wax-like luster, endodermis with distinct rings. Odor, slightly aromatic; taste, slightly bitter.
2. Root tuber of *Curcuma kwangsiensis* (Guei Yu Jin): Long conical, oblong, fusiform or oval, 2~7 cm in length, l~1.8 cm in diameter. Externally pale brown or brownish-yellow, with fine longitudinal wrinkles. Texture hard, fracture granules or horny, pale grayish-brown, endodermis with distinct rings. Odor, slight; taste, slightly pungent and bitter.
3. Root tuber of *Curcuma longa* (Huang Sih Yu Jin): Fusiform, less elliptical-conical, some hypertrophy at one end, 2.5~5.5 cm in length, 0.9~1.8 cm in diameter. Externally grayish-brown or grayish-yellow, with fine wrinkles. Texture hard, fracture slightly translucent, horny, outer brownish-yellow or brownish-red, inner orange-yellow or inaurate. Odor, aromatic; taste, pungent.
4. Root tuber of *Curcuma phaeocaulis* (Lyu Sih Yu Jin): Oblong, slightly flattened, 2~4.5 cm in length, 1~l.5 cm in diameter. Externally gray or grayish-black, with wrinkles, slightly rough. Fracture semi-horny. Taste, pungent.

Microscopic identification:

1. **Transverse section:**
   (1) Root tuber of *Curcuma wenyujin*: Epidermis occasionally remained, the outer walls slightly thickened. Velamen narrow, composed of 4~9 rows of cells with slightly sinuous and thin walls, arranged regularly. Cortex occupied about 1/2 of root. Oil cells rarely visible. Endodermis distinct. In stele, phloem bundles and xylem bundles each 35~52, arranged alternately; each phloem bundle with 2~4 vessels, xylem fibers slightly lignified; vessels polygonal, with thin wall. Gelatinized starch granules in parenchymatous cells visible.
   (2) Root tuber of *Curcuma kwangsiensis*: Velamen composed of 3~6 rows of cells, cell walls occasionally thickened, the inner side of velamen showing 1~2 rows of sclerenchymatous cells arranged in a ring, with distinct striation. In stele, phloem bundles and xylem bundles each 37~58, arranged alternately; each phloem bundle with 2~3 subrounded vessels.
   (3) Root tuber of *Curcuma longa*: Epidermis occasionally remained. Velamen composed of 3~6 rows of cells, walls of the innermost layer of velamen thickened. Endodermis distinct. In stele, phloem bundles and xylem bundles each 17~34, arranged alternately; each phloem bundle with 1 or 2~3 polygonal or subrounded vessels. Gelatinized starch granules in parenchymatous cells visible. Oil cells abundant, scattered throughout parenchyma.
   (4) Root tuber of *Curcuma phaeocaulis*: Velamen composed of 3~6 rows of cells with thin walls. In stele, phloem bundles (shriveled) and xylem bundles each 42~62, arranged alternately; each phloem bundle with 1 or 2~3 flattened vessels.

Thin layer chromatographic identification test (General rule 1010.3):

1. Sample solution: Add 1.0 g of powdered sample to 15 mL of methanol, shake for 5 minutes, filter and use the filtrate.
2. Reference drug solution: Use 1.0 g of the reference drug as the same method described above.
3. Procedure: Use silica gel F_{254} as the coating substance and a solution of ethyl acetate, 4 N ammonia and ethanol (4:1:2) as the developing solvent. Apply 10 μL of each of the above solutions to the plate. Once the top of the solvent rise to about 5~10 cm from the origin, dry in air. Spray with a solution of vanillin in a solution of sulfuric acid and methanol (Vanillin/H_2SO_4 MeOH TS), heat at 105℃ for 3 minutes. Examine under the visible light. The spots in the chromatogram obtained from the sample solution correspond in R_f

values and color to the spots in the chromatogram obtained from the reference drug solution.

Impurities and other requirements:
1. Total ash: Not more than 13.0% (General rule 5004).
2. Acid-insoluble ash: Not more than 4.0% (General rule 5004).
3. Total heavy metals: Not more than 10.0 ppm (General rule 3005).
4. Arsenic (As): Not more than 5.0 ppm (General rule 3006, 3049, 3050).

Assay:
1. Water extractives: Carry out the method for determination of water extractives (General rule 5006).
2. Dilute ethanol extractives: Carry out the method for determination of dilute ethanol-soluble extractives (General rule 5006).

Storage: Refrigerate or store in a cool and dry place, and protect from insects.
Usage: Blood-regulating medicinal (Blood-activating and stasis-dispelling medicinal).
Dosage: 3~10 g.

CURCUMAE RHIZOMA
莪朮
E Jhu / E Zhu
Zedoaria Rhizome

Zedoaria rhizome is the dried rhizome of *Curcuma phaeocaulis* Val., *Curcuma kwangsiensis* S. G. Lee et C. F. Liang or *Curcuma wenyujin* Y. H. Chen et C. Ling (Fam. Zingiberaceae). The drug derived from *Curcuma wenyujin* is commonly known as "Wen E Zhu".
It contains not less than 2.0% of dilute ethanol-soluble extractives, not less than 3.0% of water extractives and not less than 1.0% of volatile oil.

Description:
1. Rhizome of *Curcuma phaeocaulis:* Ovoid, elongated ovate, conical or elongate fusiform, apex frequently obtuse and acute, base obtuse and rounded, 2~8 cm in length, 1.5~4 cm in diameter. Externally grayish-yellow to grayish-brown, the upper part conspicuously protuberant-annulated and with rounded and slightly dented rootlet scars or remaining rootlets, some exhibiting a row of concave bud scars and subrounded lateral rhizome scars on each of two sides, and some showing knife cut traces. Texture heavy and compact, fracture grayish-brown to bluish-brown, waxy, usually attached with grayish-brown powder, bark and stele easily detachable, endodermal ring deep brown. Odor, slightly aromatic; taste, slightly bitter and pungent.
2. Rhizome of *Curcuma kwangsiensis*: Slightly raised-annulated, fracture yellowish-brown to brown, usually attached with pale yellow powder, endodermal ring yellowish-white.
3. Rhizome of *Curcuma wenyujin* (Wen E Zhu): Fracture yellowish-brown to brown, usually attached with pale yellow to yellowish-brown powder. Odor aromatic or slightly aromatic.

Microscopic identification:
1. **Transverse section:**
   (1) Rhizome of *Curcuma phaeocaulis*: Cork composed of several rows of cork cells, occasionally removed. Cortex scattered with leaf-trace vascular bundles; endodermis distinct. Stele relatively broad, vascular bundles collateral and scattered, those along the pericycle relatively small and tightly arranged. Parenchymatous cells filled with gelatinous starch masses; parenchyma scattered with cells containing golden oil contents.
2. **Powder:**
   (1) Rhizome of *Curcuma phaeocaulis*: Pale yellow. Non-glandular hairs mostly in fragments, complete ones rare. Starch granules mostly gelatinous, ungelatinous ones mostly simple, ovate or short rod-shaped, 23~41 μm in length, 19~24 μm in width, with distinct striations, hilum eccentric, located at the narrow end. Vessels mostly spiral and scalariform, a few of vessels accompanied by rod-shaped fiber groups, walls pits distinct, vessels and fibers all lignified.

Thin layer chromatographic identification test (General rule 1010.3):
1. Sample solution: Add 5.0 g of powdered sample to 50 mL of methanol, ultrasonicate for 30 minutes, stand, filter and use the filtrate.
2. Reference drug solution: Use 5.0 g of the reference drug as the same method described above.
3. Procedure: Use silica gel F_{254} as the coating substance and a solution of *n*-hexane and ethyl acetate (5:2) as the developing solvent. Apply 5 μL of each of the above solutions to the plate. Once the top of the solvent rise to about 5~10 cm from the origin, dry in air. Spray with a solution of *p*-anisaldehyde in sulfuric acid (*p*-Anisaldehyde/H_2SO_4 TS) and heat at 105℃ for 2 minutes until the spots become visible. The spots in the chromatogram obtained from the sample solution correspond in R_f values and color to the spots in the chromatogram obtained from the reference drug solution.

Impurities and other requirements:
1. Total ash: Not more than 7.0% (General rule 5004).
2. Acid-insoluble ash: Not more than 3.0% (General rule 5004).

3. Total heavy metals: Not more than 10.0 ppm (General rule 3005).
4. Arsenic (As): Not more than 5.0 ppm (General rule 3006, 3049, 3050).

Assay:
1. Water extractives: Carry out the method for determination of water extractives (General rule 5006).
2. Dilute ethanol extractives: Carry out the method for determination of dilute ethanol-soluble extractives (General rule 5006).
3. Volatile oil: Carry out the method for determination of volatile oil (General rule 5007).

Storage: Refrigerate or store in a cool and dry place, and protect from insects.
Usage: Blood-regulating medicinal (Blood-activating and stasis-dispelling medicinal).
Dosage: 6~9 g.

CUSCUTAE SEMEN
菟絲子
Tu Sih Zih / Tu Si Zi
Chinese Dodder Seed

Chinese dodder seed is the dried ripe seed of *Cuscuta australis* R. Br. or *Cuscuta chinensis* Lam. (Fam. Convolvulaceae).
It contains not less than 3.0% of dilute ethanol-soluble extractives, not less than 4.0% of water extractives and not less than 0.10% of hyperoside.

Description: Subspheroidal or ovate, 1~1.5 mm in diameter. Externally grayish-brown or yellowish-brown, rough. Hilum subround on the apex. Testa scattered with fine and dense dots and white and filamentous stripes distributed uneven. Texture hard and uneasily broken. Odorless, taste, slightly bitter and astringent.

Microscopic identification:
1. **Transverse section:** Epidermis composed of 1 layer of cells, subsquare to subrectangular, lateral wall thickened. Palisade tissue composed of 2 rows elongated cells; outer palisade cells shorter than the inner ones; light line located at the upper half of the inner palisade cells. A narrow parenchyma, composed of mostly shrunken cells, existed underneath the inner layer of palisade cells. Endosperm cells polygonal to subrounded, with thickened cell wall. Cotyledons twisted, several fragments of cotyledon can be seen. Cells of cotyledon subsquare to subrounded, containing aleurone grains.
2. **Powder:** Yellowish-brown or dark brown. Epidermal cells of testa subsquare or subrectangular in sectional view, lateral walls thickened; rounded-polygonal in surface view, walls distinctly thickened at corner. Palisade cells of testa flaky, 2 layers in sectional view, with a light line; cells polygonal in surface view, shrunken. Endosperm cells polygonal or subrounded, lumen containing aleurone grains. Cotyledon cells contain aleurone grains and fatty oil droplets.

Identification:
1. Take a quantity of powdered sample, macerate in boiling water, a mucilage is produced on the surface; boil until the testa is broken, reveal a yellowish-white, slender and rotary embryo, commonly known as "Tu Sih".

Thin layer chromatographic identification test (General rule 1010.3):
1. Hyperoside:
   (1) Sample solution: Add 1.0 g of powdered sample to 10 mL of methanol, ultrasonicate for 30 minutes, filter and use the filtrate.
   (2) Reference drug solution: Use 1.0 g of the reference drug as the same method described above.
   (3) Reference standard solution: Weigh accurately a quantity of hyperoside and dissolve in methanol to produce a solution containing 1.0 mg per mL.
   (4) Procedure: Use silica gel F_{254} as the coating substance and a solution of ethyl acetate, butanone, formic acid and water (5:3:1:1) as the developing solvent. Apply 5 μL of each of the above solutions to the plate. Once the top of the solvent rise to about 5~10 cm from the origin, dry in air. Examine under the ultraviolet light at 254 nm and 365 nm, and then spray with a 10% solution of aluminum chloride in ethanol ($AlCl_3$/EtOH TS), examine under the ultraviolet light at 365 nm again. The spots in the chromatogram obtained from the sample solution correspond in R_f values and color to the spots in the chromatogram obtained with the reference drug solution and the reference standard solution.

Impurities and other requirements:
1. Loss on drying: Not more than 10.0% under heating at 105℃ for 5 hours (General rule 5008).
2. Total ash: Not more than 10.0% (General rule 5004).
3. Acid-insoluble ash: Not more than 4.0% (General rule 5004).

Assay:
1. Hyperoside:
   (1) Mobile phase: A solution of acetonitrile and 0.1% phosphoric acid (17:83). The ratio varies as required.
   (2) Reference standard solution: Weigh accurately a quantity of hyperoside and

dissolve in methanol to produce a solution containing 48 μg per mL.

(3) Sample solution: Weigh accurately 1 g of the powdered sample, transfer to a 50-mL round bottom flask, accurately add 40 mL of 80% methanol, ultrasonicate for 1 hour, cool, filter, add 80% methanol to volume, mix well, filter, use the filtrate.

(4) Chromatographic system: The liquid chromatography is equipped with an ultraviolet absorption photometer (wavelength: 360 nm) and a column packed with octadecylsilanized silica gel. The number of theoretical plates of the peak of hyperoside should not be less than 5,000.

(5) Procedure: Inject accurately 10 μL of each of the reference standard solution and the sample solution into the liquid chromatography apparatus, and calculate the content.

2. Water extractives: Carry out the method for determination of water extractives (General rule 5006).
3. Dilute ethanol extractives: Carry out the method for determination of dilute ethanol-soluble extractives (General rule 5006).

Storage: Refrigerate or store in a cool and dry place, and protect from moisture.
Usage: Tonifying and replenishing medicinal (Yang-assisting medicinal).
Dosage: 6~12 g.

CYATHULAE RADIX
川牛膝
Chuan Niou Si / Chuan Niu Xi
Cyathula Root

Cyathula root is the dried root of *Cyathula officinalis* Kuan (Fam. Amaranthaceae), commonly known as "Du Niou Shi".
It contains not less than 45.0% of dilute ethanol-soluble extractives and not less than 65.0% of water extractives.

Description: Cylindrical, vary in thickness, slightly twisted, occasionally branched, 30~60 cm in length, 0.5~3 cm in diameter. Externally brownish-yellow or grayish-brown, with longitudinal wrinkles, scars of lateral roots and numerous transverse protuberant lenticels, apex swollen, occasionally remained with rhizomes and stem bases. Texture tenacious, uneasily broken, fracture yellowish-white or brownish-yellow, scattered with numerous pale yellow dots (vascular bundles) arranged in several concentric circles. Odor, slight; taste, slightly bitter.

Microscopic identification:

1. **Transverse section:** Cork composed of 15~20 layers of cells. Phelloderm and cortex narrow. Vascular cylinder large, abnormal vascular bundles interruptedly arranged in 3~8 whorls; vascular bundles collateral; intrafascicular cambium visible; xylem composed of vessels and xylem fibers, extremely lignified. Secondary vascular system usually separated into 2~9 strands at the central, occasionally with sparsely scattered vessels in the center of root. Parenchymatous cells containing sandy crystals and prisms of calcium oxalate.
2. **Powder:** Grayish-brown. Sandy crystals of calcium oxalate filled in parenchymatous cells, triangular, rhombic, arrow-pointed, polygonal or irregular, occasionally aggregated in the corner of cell. Crystal-containing cells relatively large in size, subrectangular or subrounded, surrounded by radically arranged cells. Xylem fibers strip-shaped or irregular long-fusiform, with branching end, 13~49 μm in diameter, walls slightly thickened and unlignified, bordered pits few, pit apertures elongated oblique, occasionally crossed in cruciate shape or V-shaped with single pits present. Pit canals distinct with different spacing, relatively dense walls moniliform. Bordered-pitted vessels 18~110 μm in diameter, walls unlignified, some vessel elements fusiform at the end, perforations in lateral walls; pits round or oblong, transversely elongated to 18 μm long, alternated and arranged densely. Few prisms of calcium oxalate, up to 22 μm in diameter; raphides of calcium oxalate up to 76 μm in diameter and cork cells also present.

Thin layer chromatographic identification test (General rule 1010.3):

1. Sample solution: Add 2.0 g of powdered sample to 50 mL of methanol, heat under reflux for 1 hour, filter, evaporate the filtrate to 1 mL and apply to a column packed with neutral alumina (100~200 mesh, 2.0 g, 1 cm in inner diameter) and elute with 40 mL of a solution of methanol and ethyl acetate (1:1), collect the eluates and evaporate to dryness, dissolve the residue in 1 mL of methanol.
2. Reference drug solution: Use 2.0 g of the reference drug as the same method described above.
3. Reference standard solution: Weigh accurately a quantity of cyasterone and dissolve in methanol to produce a solution containing 0.5 mg per mL.
4. Procedure: Use silica gel F_{254} as the coating substance and a solution of chloroform and methanol (10:1) as the developing solvent. Apply 5~10 μL of the sample solution and 5 μL of each of the reference drug solution and reference standard solution to the plate. Once the top of the solvent rise to about 5~10 cm from the origin, dry in air. Spray with a 10% solution of sulfuric acid in ethanol and heat at 105℃until the spots become visible. Examine under ultraviolet light at 365 nm. The spots in the chromatogram obtained from the sample solution correspond in R_f values and color to the spots in the chromatogram obtained from the

reference drug solution and the reference standard solution.

Impurities and other requirements:

1. Loss on drying: Not more than 12.0% under heating at 105℃ for 5 hours (General rule 5008).
2. Total ash: Not more than 7.0% (General rule 5004).
3. Acid-insoluble ash: Not more than 2.0% (General rule 5004).

Assay:

1. Water extractives: Carry out the method for determination of water extractives (General rule 5006).
2. Dilute ethanol extractives: Carry out the method for determination of dilute ethanol-soluble extractives (General rule 5006).

Storage: Refrigerate or store in a cool and dry place, and protect from insects.
Usage: Blood-regulating medicinal (Blood-activating and stasis-dispelling medicinal).
Dosage: 3~10 g.

CYNANCHI ATRATI RADIX ET RHIZOMA
白薇
Bai Wei / Bai Wei
Blackend Swallowwort Root and Rhizome

Blackend swallowwort root and rhizome is the dried root and rhizome of *Cynanchum atratum* Bunge or *Cynanchum versicolor* Bunge (Fam. Asclepiadaceae).
It contains not less than 12.0% of dilute ethanol-soluble extractives and not less than 12.0% of water extractives.

Description: Rhizomes thick and short, knotty, slightly extending laterally, 0.5~1.2 cm in the diameter, the upper part with rounded stem scars or remained with stem bases, over 5 mm in the diameter, numerous slender roots fascicled bilaterally and the lower part, caudate-shaped. Roots slender about 10~25 cm in length, 1~2 mm in diameter. Externally brownish-yellow, smooth, with tiny longitudinally wrinkles. Texture hard and fragile, easily broken, fracture even, pale yellowish-white, wood yellow. Odor, slight; taste, slightly bitter.

Microscopic identification:

1. **Transverse section:**
   (1) Root: Epidermal cells subpolygonal, outer walls slightly thickened. Cortex composed of about 20 layers of subrounded parenchymatous cells, containing small starch granules and clusters of calcium oxalate; endodermal cells prolate, with distinct Casparian dots. Pericycle composed of 1~2 layers of tangentially elongated parenchymatous cells; phloem narrow; cambium in a ring; the walls of xylem vessels, tracheid, xylem fibers and xylem parenchymatous cells all lignified, vessels 8~56 μm in diameter.
   (2) Rhizome: Epidermis elongated radially. Cortex contains stone cells at the nodes. Phloem relatively narrow; cambium in a ring; xylem vessels usually singly scattered or 2~4 arranged tangentially, the walls of xylem fibers and xylem parenchymatous cells all lignified; internal phloem sieve tube groups arranged in a ring. Pith eccentric, scattered with few stone cells. Parenchymatous cells contain starch granules, some containing clusters of calcium oxalate.
2. **Powder:** Pale grayish-white. Clusters of calcium oxalate 7~42 μm in diameter, occasionally one cell contain 2 crystals, some crystal-containing cells radially connected. Epidermal cells of rhizome subpolygonal or long-polygonal in surface view, 16~40 μm in diameter, up to 94 μm in length, wall slightly thickened; secretory cells present in epidermal tissue, subpolygonal, 14~33 μm in diameter, up to 45 μm in length, containing yellow secretions. Epidermal cells subsquare or slightly flatten in sectional view, occasionally tangentially split into 2, yellow secretory cells present as external cells. Hypodermal cells of root subrectangular, walls undulate; subrounded secretory cells scattered in hypodermal tissue, containing yellow secretions. Bordered-pitted, reticulate and spiral vessels present, 10~50 μm in diameter. Xylem fibers mostly in bundles, 10~25 μm in diameter, walls 2.5~11 μm thick, with oblique pits or small round pits. Endodermal cells rectangular in surface view, anticlinal walls undulate and slightly lignified. Individual starch granules subrounded, hilum dotted, cleft-shaped or Y-shaped, compound granules composed of 2~6 components; walls of fibers extremely thickened, lumen fine or indistinct, occasionally the primary walls separated from the secondary walls.

Thin layer chromatographic identification test (General rule 1010.3):

1. Sample solution: Add 1.0 g of powdered sample to 30 mL of methanol, ultrasonicate for 20 minutes, cool, evaporate the filtrate to dryness. Dissolve the residue in 1 mL of methanol.
2. Reference drug solution: Use 1.0 g of the reference drug as the same method described above.
3. Procedure: Use silica gel F_{254} as the coating substance and the supernatant of *n*-butanol, ethyl acetate and water (4:1:5) as the developing solvent. Apply 2 μL of each of the above solutions to the plate. Once the top of the solvent rise to about 5~10 cm from the origin, dry in air. Spray with a solution of sulfuric acid in ethanol (1:9) (H_2SO_4/EtOH TS), heat at 105℃ until the spots become visible. The spots in the chromatogram

obtained from the sample solution correspond in R_f values and color to the spots in the chromatogram obtained from the reference drug solution.

Impurities and other requirements:

1. Loss on drying: Not more than 11.0% under heating at 105℃ for 5 hours (General rule 5008).
2. Total ash: Not more than 14.0% (General rule 5004).
3. Acid-insoluble ash: Not more than 4.0% (General rule 5004).

Assay:

1. Water extractives: Carry out the method for determination of water extractives (General rule 5006).
2. Dilute ethanol extractives: Carry out the method for determination of dilute ethanol-soluble extractives (General rule 5006).

Storage: Store in a ventilated and dry place.
Usage: Heat-clearing medicinal (Deficiency heat-clearing medicinal).
Dosage: 3~10 g.

CYNANCHI STAUNTONII RHIZOMA ET RADIX
白前
Bai Cian / Bai Qian
Willowleaf Swallowwort Rhizome and Root

Willowleaf swallowwort rhizome and root is the dried rhizome and root of *Cynanchum stauntonii* (Decne.) Schltr. ex Levl. or *Cynanchum glaucescens* (Decne.) Hand.-Mazz. (Fam. Asclepiadaceae).
It contains not less than 9.0% of dilute ethanol-soluble extractives and not less than 9.0% of water extractives.

Description:

1. Rhizome of *Cynanchum stauntonii*: Slenderly cylindrical, branched, 4~15 cm in length, 1.5~4 mm in diameter. Externally yellowish-white, yellowish-brown or blackish-brown, with longitudinal wrinkles, obviously nodose, internodes 1.5~4.5 cm in length, with numerous whisker rootlets, apex remained with grayish-green stems. Texture fragile, fracture white, pith membranous, hollow, commonly known as "A Guan Bai Chian". Root slender and winded up into masses, up to 11 cm in length, 0.3~1 mm in diameter, much-branched. Externally reddish-brown, with wrinkles. Texture light and shrunken, fragile, fracture white. Odor, slight; taste, sweetish.
2. Rhizome of *Cynanchum glaucescens*: Relatively shorter and smaller, or slightly lump-shaped. Externally grayish-green or grayish-yellow, internodes 1~2 cm in length. Texture relatively hard. Roots slightly curved, about 1 mm in diameter, less branched.

Microscopic identification:

1. **Transverse section:**
   (1) Root of *Cynanchum stauntonii*: Epidermis composed of 1 layer of brown walled subpolygonal cells, the outer walls slightly thickened. Cortex composed of about more than 10 layers of subrounded parenchymatous cells, containing starch granules and clusters of calcium oxalate, 10~40 μm in diameter; endodermal cells flat and small, with distinct Casparian dots. Stele small and oblong, pericycle composed of 1 row of subrounded parenchymatous cells; phloem located at the both sides of xylem; xylem diarch arranged in stripes, containing more than 10 bordered-pitted and spiral vessels, vessels 6~24 μm in diameter; xylem parenchymatous cells unlignified.
   (2) Rhizome of *Cynanchum stauntonii*: Epidermis composed of 1 layer of radially elongated cells; hypodermis arranged in order. Cortex contains laticiferous tubes. Thick rhizome contains pericyclic fiber bundles arranged in a ring. Phloem narrow, arranged in an interrupted ring. Cambium in a ring. Xylem vessels singly scattered or 2 arranged radially; xylem fibers and xylem parenchymatous cells lignified. Internal phloem consists of numerous sieve tube groups, arranged in a ring around pith. Pith mostly hollowed. Parenchymatous cells contain starch granules, occasionally containing clusters of calcium oxalate.
   (3) Rhizome of *Cynanchum glaucescens*: Cortex without laticiferous tubes.
2. **Powder:** Pale yellowish-white. Epidermal cells composed of 1 layer of prolate cells in longitudinal view, covered with yellowish-brown cuticles. Vessels mainly reticulated, bordered-pitted, 16~34 μm in diameter, 200~330 μm in length. Walls of xylem fibers thin, both ends truncate or acute long, with distinct pits. Starch granules numerous, singly scattered or composed of 2 to several components, subrounded, suboblong, subconchoidal, semicircular or fan-shaped, about 4~8 μm in size. Clusters of calcium oxalate scattered, mostly existed in small parenchymatous cells, singly scattered or linked by 2, angles dish-shaped or crushing small pieces, 8~40 μm in size, hilum slightly distinct, yellowish-brown.

Identification:

1. Take 1.0 g of powdered sample, add 10 mL of 70% ethanol, heat under reflux for 1 hour, filter and use the filtrate. Evaporate 1 mL of filtrate to dryness, dissolve the residue in 1 mL of acetic anhydride, add 1 drop of concentrated sulfuric acid, a reddish-violet color is produced and turn to dark green after stand for a moment for rhizome of *Cynanchum stauntonii*; a brownish-red color is

produced permanently for rhizome of *Cynanchum glaucescens*. Color would not change over time.

Impurities and other requirements:
1. Loss on drying: Not more than 13.0% under heating at 105℃ for 5 hours (General rule 5008).
2. Total ash: Not more than 9.0% (General rule 5004).
3. Acid-insoluble ash: Not more than 5.0% (General rule 5004).

Assay:
1. Water extractives: Carry out the method for determination of water extractives (General rule 5006).
2. Dilute ethanol extractives: Carry out the method for determination of dilute ethanol-soluble extractives (General rule 5006).

Storage: Store in a dry place, and protect from insects.
Usage: Phlegm-dispelling medicinal (Cold-phlegm warming and resolving medicinal).
Dosage: 3~10 g.

CYNOMORII HERBA
鎖陽
Suo Yang / Suo Yang
Songaria Cynomorium Herb

Songaria cynomorium herb is the dried fleshy stem of *Cynomorium songaricum* Rupr. (Fam. Cynomoriaceae). It contains not less than 19.0% of dilute ethanol-soluble extractives and not less than 20.0% of water extractives.

Description: Flattened cylindrical or one end slightly slender, 8~21 cm in length, 2~5 cm in diameter. Externally reddish-brown or dark brown, shrunken forming distinct longitudinal furrows or irregular dents, occasionally remained with triangular and blackish-brown scales and partial inflorescence. Texture hard, uneasily broken, fracture slightly granular, brown and soft, occasionally with white triangular or irregular vascular bundles. Odor, slightly aromatic; taste, slightly bitter and astringent.

Microscopic identification:
1. **Transverse section:**
   (1) Stem: Cork mostly fallen off, residual of cells occasionally found. Cortex narrow, cells containing brown contents, with strip-shaped striations on the surface. Stele broad, scattered with abundant vascular bundles, several arranged fan-shaped or semirounded, small in the outermost layer, and relatively large inward. Vessels lignified. Parenchymatous cells contain numerous starch granules.
2. **Powder:** Pale brown. Starch granules round, mostly simple, 4~30 μm in diameter, hilum distinct, slightly stellate, V-shaped or slit-shaped; compound granules occasionally found, composed of 2~3 components. Vessels mainly reticulate or spiral. Parenchymatous cells contain brown contents.

Thin layer chromatographic identification test (General rule 1010.3):
1. Sample solution: Add 1.0 g of powdered sample to 20 mL of ethyl acetate, ultrasonicate for 30 minutes, cool, filter, and evaporate the filtrate to 1 mL.
2. Reference drug solution: Use 1.0 g of the reference drug as the same method described above.
3. Reference standard solution: Add 5.0 mg of ursolic acid to a 10-mL volumetric flask, and add methanol to volume.
4. Procedure: Use silica gel F_{254} as the coating substance and a solution of toluene, ethyl acetate and formic acid (20:4:0.5) as the developing solvent. Apply 5 μL of each of the above solutions to the plate. Once the top of the solvent rise to about 5~10 cm from the origin, dry in air. Spray a 10% solution of sulfuric acid in ethanol (H_2SO_4/EtOH TS), heat at 105℃ to spots clear. Examine under the visible light. The spots in the chromatogram obtained from the sample solution correspond in R_f values and color to the spots in the chromatogram obtained from the reference drug solution and the reference standard solution.

Impurities and other requirements:
1. Loss on drying: Not more than 12.0% under heating at 105℃ for 5 hours (General rule 5008).
2. Total ash: Not more than 12.0% (General rule 5004).
3. Acid-insoluble ash: Not more than 2.0% (General rule 5004).

Assay:
1. Water extractives: Carry out the method for determination of water extractives (General rule 5006).
2. Dilute ethanol extractives: Carry out the method for determination of dilute ethanol-soluble extractives (General rule 5006).

Storage: Store in a ventilated and dry place.
Usage: Deficiency-tonifying medicinal.
Dosage: 5~9 g.

CYPERI RHIZOMA
香附
Siang Fu / Xiang Fu
Cyperus Rhizome

Cyperus rhizome is the dried rhizome of *Cyperus rotundus* L. (Fam. Cyperaceae).

It contains not less than 3.0% of dilute ethanol-soluble extractives and not less than 4.0% of water extractives.

Description: Frequently fusiform, some slightly curved, 2~3.5 cm in length, 0.5~1 cm in diameter. Externally brown or blackish-brown, with longitudinally wrinkles and some protuberant annular nodes. Mau shiang fu (directly dried in the sun): nodes with brown fibrous roots and scars of roots. Guang shiang fu (burnt off the fibrous roots and dried in the sun): relatively smooth, with indistinct annular nodes. Texture hard, fracture of steamed rhizomes appearing yellowish-brown or reddish-brown, horny; fracture of the unsteamed ones white and starchy, endodermis ring obvious, stele darkened in color, with scattered dotted vascular bundles. Odor, aromatic; taste, slightly bitter.

Microscopic identification:

1. **Transverse section:** Epidermis brownish-yellow, accompanied by hypodermal fiber bundles, inside showing 2~3 layers of hypodermal cells with thick walls. Cortex scattered with leaf-trace vascular bundles in closed collateral type, secretory cells subrounded, containing yellow secretions, with 5~8 parenchymatous cells arranged radially in a circle. Endodermis distinct. Stele composed of numerous amphivasal vascular bundles and secretory cells. Parenchymatous cells contain starch granules.
2. **Powder:** Pale brown. Ungelatinous starch granules subrounded, subtriangular, subsquare or gear-shaped, 3~27 μm in diameter. Secretory cells subrounded, 35~72 μm in diameter, containing yellowish-brown or reddish-brown secretions, with 7~8 parenchymatous cells radially arranged in a circle. Hypodermal fibers and leaf base fibers in bundles, reddish-brown or yellowish-brown, 5~22 μm in diameter, wall extremely thickened; fiber bundles occasionally surrounded by small cells containing silica masses. Hypodermal cells subpolygonal or subsquare, wall slightly thickened and lignified, with distinct pit canals. Stone cells subsquare, polygonal or slightly elongated, 17~48 μm in diameter, wall 5~8 μm thick. Scalariform, spiral and reticulate vessels also present.

Thin layer chromatographic identification test (General rule 1010.3):

1. Sample solution: Add 1.0 g of powdered sample to 10 mL of methanol, heat under reflux for 30 minutes, cool, filter and use 5 μL of the filtrate.
2. Reference drug solution: Use 1.0 g of the reference drug as the same method described above.
3. Procedure: Use silica gel F_{254} as the coating substance and a solution of *n*-hexane and ethyl acetate (4:1) as the developing solvent. Apply appropriate amount of each of the above solutions to the plate. Once the top of the solvent rise to about 5~10 cm from the origin, dry in air. Spray with a solution of *p*-anisaldehyde in sulfuric acid (*p*-Anisaldehyde/H_2SO_4 TS), heat at 105℃ for 2 minutes, examine under visible light. The spots in the chromatogram obtained from the sample solution correspond in R_f values and color to the spots in the chromatogram obtained from the reference drug solution.

Impurities and other requirements:

1. Loss on drying: Not more than 15.0% under heating at 105℃ for 5 hours (General rule 5008).
2. Total ash: Not more than 4.0% (General rule 5004).
3. Acid-insoluble ash: Not more than 2.0% (General rule 5004).

Assay:

1. Water extractives: Carry out the method for determination of water extractives (General rule 5006).
2. Dilute ethanol extractives: Carry out the method for determination of dilute ethanol-soluble extractives (General rule 5006).

Storage: Store in a ventilated and dry place, and protect from insects.
Usage: Qi-regulating medicinal.
Dosage: 6~9 g.

DENDROBII CAULIS
石斛
Shih Hu / Shi Hu
Dendrobium Stem

Dendrobium stem is the fresh or dried stem of *Dendrobium nobile* Lindl., *Dendrobium loddigesii* Rolfe., *Dendrobium chrysanthum* Wall., *Dendrobium fimbriatum* Hook. var. *oculatum* Hook. or *Dendrobium candidum* Wall. ex Lindl. (Fam. Orchidaceae).
It contains not less than 5.0% of dilute ethanol-soluble extractives and not less than 6.0% of water extractives of dried stem.

Description:

1. Stem of *Dendrobium nobile*: Flattened-cylindrical of middle and upper parts, branchlets zigzag, 18~60 cm in length, middle part 0.4~1 cm in diameter, internodes 1.5~6 cm in length. Externally golden or greenish-yellow, lustrous, deeply furrowed longitudinally, with longitudinal wrinkles, nodes swelled, brown. Texture hard and fragile, fracture relatively lax. Odor, slight; taste, bitter.
2. Stem of *Dendrobium loddigesii*: Long cylindrical, often curved, winded up into masses or bundles, 11~40 cm in length, 1~3 mm in diameter, internodes 0.4~2.3 cm in length. Externally golden, lustrous, with fine longitudinally wrinkles. Texture tenacious and hard, fracture relatively even. Odor, slight; taste, slightly bitter, viscous on chewing.

3. Stem of *Dendrobium chrysanthum*: Slender and conical, irregular curved of the middle and upper parts, 23~120 cm in length, 2~5 mm in diameter, internodes 2~3.5 cm in length. Externally golden or brownish-yellow, with longitudinally wrinkles. Texture light and compact, fracture slightly fibrous. Odor, slight; taste, slightly bitter, viscous on chewing.
4. Stem of *Dendrobium fimbriatum* var. *oculatum*: Some branched of the upper part, 30~150 cm in length, 2~8 mm in diameter, internodes 2~5.0 cm in length. Externally brownish-yellow, with 8~9 deeply longitudinally furrows. Texture lax, fracture fibrous. Odor, slight; taste, slightly bitter. Sliced pieces often cut into 1.5~3 cm in length, fracture grayish-white.
5. Stem of *Dendrobium candidum*: Spiral or spring-like after processed, usually 2~4 spiral patterns, as whole, 3.5~8 cm in length, 1.5~3 mm in diameter, internodes 1~3.5 cm in length. Externally yellowish-green or yellow, with fine longitudinal wrinkles, with short fibrous root at one edge. Texture compact and fragile, fracture even. Viscous on chewing, no fiber residue; taste, sweet.

Microscopic identification:

1. **Transverse section:**
   (1) Stem of *Dendrobium nobile*: About 7 mm in diameter, composed of 1 layer of thin and flat cells, with thick and orange-yellow cuticles. Cortex narrow. Vascular bundles of stele numerous, scattered, slightly arranged in 7~8 whorls. Fiber groups outside of closed collateral vascular bundles composed of 1~6 rows of fibers, 22~42 μm in diameter, walls 1.5~7 μm thick, fine and small parenchymatous cells embed near the margin, occasionally containing subrounded silica bodies, 5~9 μm in diameter; phloem broad; xylem vessels 1~4 relatively large, about 51 μm in diameter; no fibers or 1~2 rows present at the inner. Mucilage cells and raphides of calcium oxalate, 50~130 μm in length, also present.
   (2) Stem of *Dendrobium loddigesii*: About 3 mm in diameter, vascular bundles slightly arranged in 3~4 whorls. Fiber groups outside of vascular bundles composed of 2~5 rows of fibers, up to 27 μm in diameter, walls 1.6~3 μm thick; xylem vessels 1~2 relatively large, 30~40 μm in diameter. Raphides-containing cells mostly accompanied by vascular bundles, the raphides 50~74 μm in length.
   (3) Stem of *Dendrobium chrysanthum*: About 5 mm in diameter, vascular bundles slightly arranged in 5~6 whorls. Fiber groups outside of vascular bundles composed of 1~6 rows of fibers, up to 29 μm in diameter, walls 1.5~5 μm thick; silica bodies relatively numerous, 3~10 μm in diameter; xylem vessels 1~3 relatively large, up to 48 μm in diameter. Raphides-containing cells mostly accompanied by vascular bundles, the raphides 33~83 μm in length.
   (4) Stem of *Dendrobium fimbriatum* var. *oculatum*: About 8 mm in diameter, epidermis flat-rounded, the outer and lateral walls thickened and lignified, with distinct striations. Cortex composed of 3~4 layers of cells. Vascular bundles slightly arranged in 6~7 whorls. Fiber groups outside of vascular bundles composed of 2~8 layers of fibers, up to 29 μm in diameter, walls 3~8 μm thick; silica bodies relatively numerous, 6~16 μm in diameter; xylem vessels 1~4 relatively large, up to 54 μm in diameter.
   (5) Stem of *Dendrobium candidum*: About 4.5 mm in diameter, epidermis composed of 4~5 rows of cells. Fiber groups outside of vascular bundles composed of 1~5 layers of fibers, up to 21 μm in diameter, walls 3~6 μm thick; xylem vessels similar in size, up to 24 μm in diameter. Raphides-containing cells mostly existed near epidermis, the raphides 60~100 μm in length.

Thin layer chromatographic identification test (General rule 1010.3):

1. Stem of *Dendrobium nobile*:
   (1) Sample solution: Add 1.0 g of powdered sample to 10 mL of methanol, ultrasonicate for 30 minutes, filter and use the filtrate.
   (2) Reference drug solution: Use 1.0 g of the reference drug as the same method described above.
   (3) Reference standard solution: Weigh accurately a quantity of dendrobine and dissolve in methanol to produce a solution containing 1.0 mg per mL.
   (4) Procedure: Use silica gel F_{254} as the coating substance and a solution of petroleum ether (30~60 ℃) and acetone (7:3) as the developing solvent. Apply 20 μL of each of the sample solution and reference drug solution and 5 μL of reference standard solution to the plate. Once the top of the solvent rise to about 5~10 cm from the origin, dry in air. Spray with modified Dragendorff's reagent. The spots in the chromatogram obtained from the sample solution correspond in R_f values and color to the spots in the chromatogram obtained from the reference drug solution and the reference standard solution.
2. Stem of *Dendrobium chrysanthum*:
   (1) Sample solution: Add 1.0 g of powdered sample to 50 mL of methanol, stand for 20 minutes, ultrasonicate for 45 minutes, to

filtrate add methanol to 25 mL, evaporate to dryness, dissolve the residue in 5 mL of methanol.

(2) Reference drug solution: Use 1.0 g of the reference drug as the same method described above.

(3) Reference standard solution: Weigh accurately a quantity of erianin and dissolve in methanol to produce a solution containing 0.2 mg per mL.

(4) Procedure: Use silica gel F_{254} as the coating substance and a solution of petroleum ether (30~60℃) and ethyl acetate (3:2) as the developing solvent. Apply 5~10 μL of each of the sample solution and reference drug solution and 5 μL of reference standard solution to the plate. Once the top of the solvent rise to about 5~10 cm from the origin, dry in air. Spray with a 10% solution of sulfuric acid in ethanol (H_2SO_4/EtOH TS), heat at 105℃ until the spots become visible. The spots in the chromatogram obtained from the sample solution correspond in R_f values and color to the spots in the chromatogram obtained from the reference drug solution and the reference standard solution.

3. Stem of *Dendrobium fimbriatum* var. *oculatum*:

(1) Sample solution: Add 0.5 g of powdered sample to 25 mL of methanol, ultrasonicate for 45 minutes, evaporate to dryness, and dissolve the residue in 25 mL of methanol.

(2) Reference drug solution: Use 0.5 g of the reference drug as the same method described above.

(3) Reference standard solution: Weigh accurately a quantity of gigantol and dissolve in methanol to produce a solution containing 0.2 mg per mL.

(4) Procedure: Use silica gel F_{254} as the coating substance and a solution of petroleum ether (30~60℃) and ethyl acetate (3:2) as the developing solvent. Apply 5~10 μL of each of the sample solution and reference drug solution and 5 μL of reference standard solution to the plate. Once the top of the solvent rise to about 5~10 cm from the origin, dry in air. Spray with a 10% solution of sulfuric acid in ethanol (H_2SO_4/EtOH TS), heat at 105℃ until the spots become visible. The spots in the chromatogram obtained from the sample solution correspond in R_f values and color to the spots in the chromatogram obtained from the reference drug solution and the reference standard solution.

Impurities and other requirements:

1. Loss on drying: Not more than 14.0% under heating at 105℃ for 5 hours (General rule 5008).
2. Total ash: Not more than 7.0% (General rule 5004).
3. Acid-insoluble ash: Not more than 2.0% (General rule 5004).

Assay:

1. Water extractives: Carry out the method for determination of water extractives (General rule 5006).
2. Dilute ethanol extractives: Carry out the method for determination of dilute ethanol-soluble extractives (General rule 5006).

Storage: The dried product should be stored in a ventilated and dry place, and protected from moisture; the flesh product should be stored in a cool and damp place, and protected from freezing.

Usage: Tonifying and replenishing medicinal (Yin-tonifying medicinal).

Dosage: 6~12 g.

DESMODII STYRACIFOLII HERBA
廣金錢草
Guang Jin Cian Cao / Guang Jin Qian Cao
Snowbell-leaf Tickclover Herb

Snowbell-leaf tickclover herb is the dried herb of *Desmodium styracifolium* (Osb.) Merr. (Fam. Leguminosae).

It contains not less than 3.0% of dilute ethanol-soluble extractives, not less than 5.0% of water extractives and not less than 0.13% of schaftoside.

Description: Stems cylindrical, up to 1 m in length, densely covered with yellow spreading pubescence; texture fragile, fracture medullated. Leaves alternate, leaflets 1~3, rounded or oblong, 2.5~4.5 cm in length, 2~4 cm in width; apex slightly dented, base cordate or obtusely rounded, margin entire; the upper surface yellowish-green or grayish-green, the lower surface covered with grayish-white tomenta; lateral veins pinnate; petiole 1~2 cm in length; stipules lanceolate, about 8 mm in length. Odor, slightly aromatic; taste, slightly sweet.

Microscopic identification:

1. **Transverse section:**

(1) Stem: The outermost layer was rectangular epidermal cells, wall thickened; inside showing cork, cells polygonal, wall thickened and suberized. Non-glandular hairs 2 types: one type is hook-like, small, 35~120 μm in length, composed of 1~3 cells; the other type is long needle-shaped, unicellular, slightly curved. Cortex composed of 6~10 layers of oblong parenchymatous cells, some cells contain red and irregular pigment masses. Pericyclic fibers composed of 3~6 layers of fibers into bundles or bands, arranged in an interrupted ring. Phloem cells

irregular in shape, arranged densely, some cells contain prisms of calcium oxalate, singly scattered, 5~20 μm in diameter. Vessels singly scattered or 2~3 linked, 30~70 μm in diameter, lignified, mainly reticulate and spiral. Pith with thin walls, polygonal, 40~120 μm in diameter.

2. **Powder:** Yellowish-green. Both upper and lower epidermis of leaf irregularly polygonal, with small anomocytic stomata, subsidiary cells 2~4. Non-glandular hairs of 2 types: one type is hook-like, small, 35~120 μm in length, composed of 1~3 cells; the other type is long needle-shaped, unicellular, slightly curved. Cork cells polygonal, wall thickened and suberized. Prisms of calcium oxalate singly scattered, 5~20 μm in diameter. Pericyclic fibers with both ends acute. Xylem fibers lanceolate, the apex slightly curved. Pigment masses irregular in shape, scattered in parenchymatous cells of cortex, parenchymatous cells of pith and palisade tissue. Vessels 30~70 μm in diameter, vessels of leaf veins reticulate, scalariform or spiral, wall slightly lignified.

Thin layer chromatographic identification test (General rule 1010.3):

1. Schaftoside:
   (1) Sample solution: Add 0.2 g of powdered sample to 25 mL of 80% methanol, ultrasonicate for 20 minutes, filter, evaporate the filtrate to dryness, and dissolve the residue in 50% methanol.
   (2) Reference drug solution: Use 0.2 g of the reference drug as the same method described above.
   (3) Reference standard solution: Weigh accurately a quantity of schaftoside and dissolve in 50% methanol to produce a solution containing 75 μg per mL.
   (4) Procedure: Use polyamide as the coating substance and a solution of ethyl acetate, butanone and formic acid (5:1:1) as the developing solvent. Apply 1 μL of each of the above solutions to the plate. Once the top of the solvent rise to about 5~10 cm from the origin, dry in air. Spray with a solution of aluminum chloride in ethanol ($AlC1_3$/EtOH TS), and dry with hot air. Examine under ultraviolet light at 365 nm. The spots in the chromatogram obtained from the sample solution corresponds in R_f values and color to the spots in the chromatogram obtained from the reference drug solution and the reference standard solution.
2. Reference drug:
   (1) Sample solution: Add 1.0 g of powdered sample to 15 mL of methanol, ultrasonicate for 30 minutes, filter and use the filtrate.
   (2) Reference drug solution: Use 1.0 g of the reference drug as the same method described above.
   (3) Procedure: Use polyamide as the coating substance and a solution of toluene, ethyl acetate and methanol (8:1:1) as the developing solvent. Apply 10 μL of each of the above solutions to the plate. Once the top of the solvent rise to about 5~10 cm from the origin, dry in air. Spray with a solution of vanillin in a solution of sulfuric acid and methanol (Vanillin/H_2SO_4 MeOH TS), heat at 105℃ for 2 minutes. Examine under the visible light. The spots in the chromatogram obtained from the sample solution corresponds in R_f values and color to the spots in the chromatogram obtained from the reference drug solution.

Impurities and other requirements:

1. Loss on drying: Not more than 12.0% under heating at 105℃ for 5 hours (General rule 5008).
2. Total ash: Not more than 11.0% (General rule 5004).
3. Acid-insoluble ash: Not more than 5.0% (General rule 5004).

Assay:

1. Schaftoside:
   (1) Mobile phase: A solution of methanol and water (32:68). The ratio varies as required.
   (2) Reference standard solution: Weigh accurately a quantity of schaftoside and dissolve in 50% methanol to produce a solution containing 75 μg per mL.
   (3) Sample solution: Weigh accurately 0.2 g of the powdered sample, transfer to a conical flask with stopper, accurately add 25 mL of 80% methanol, weigh, ultrasonicate for 20 minutes, cool, weigh again, replenish the loss of the weight with 80% methanol, mix well, filter, evaporate the filtrate to dryness, dissolve the residue in a quantity of 50% methanol, transfer the solution to 10-mL volumetric flask, add 50% methanol to volume, mix well, filter and use the filtrate.
   (4) Chromatographic system: The liquid chromatography is equipped with an ultraviolet absorption photometer (wavelength: 272 nm) and a column packed with octadecylsilanized silica gel. The number of theoretical plates of the peak of schaftoside should not be less than 1,500.
   (5) Procedure: Inject accurately 5 μL of each of the reference standard solution and the sample solution into the liquid chromatography apparatus, and calculate the content.
2. Water extractives: Carry out the method for determination of water extractives (General rule 5006).

3. Dilute ethanol extractives: Carry out the method for determination of dilute ethanol-soluble extractives (General rule 5006).

Storage: Store in a dry place.
Usage: Dampness-draining diuretic medicinal.
Dosage: 15~30 g.

DIANTHI HERBA
瞿麥
Jyu Mai / Ju Mai
Pink Herb

Pink herb is the dried aerial part of *Dianthus superbus* L. or *Dianthus chinensis* L. (Fam. Caryophyllaceae).
It contains not less than 9.0% of dilute ethanol-soluble extractives and not less than 11.0% of water extractives.

Description:
1. Aerial part of *Dianthus superbus*: Stems cylindrical, branched at the upper part, 30~60 cm in length, nodes swollen; externally pale green or yellowish-green, glabrous. Leaves mostly crumpled, opposite, yellowish-green, lamina liner-lanceolate as whole, 2~10 cm in length, 0.4~1 cm in width, apex slightly curved, base short sheath shape and amplexicaul. Flowers solitary or several aggregated into cyme; calyx tubular, 2.5~3.5 cm in length, about 3/4 of flower, persistent; bracts 4~6, broadly ovate, about 1/4 in length of calyx tube, apex acute or acuminate, with regularly longitudinal striations; petals brownish-purple or brownish-yellow, 3~4 cm in length, apex deeply laciniate. Capsules cylindrical, as long as persistent calyx. Seeds minute, numerous, brown and flattened. Odorless; taste, sweet.
2. Aerial part of *Dianthus chinensis*: Stem erect, cylindrical, branched, 30~50 cm in length; texture hard and fragile, fracture hollowed. Lamina strip-lanceolate as whole, 2~9 cm in length, 0.2~0.7 cm in width. Calyx tubular, 1~2 cm in length, about 1/2 of flower; bracts numerous, about 1/2 in length of calyx tube, apex acuminate, imbricate; occasionally with shrunken petals, brownish-purple or brownish-yellow, apex shallowly toothed. Odor, slight; taste, slightly sweet.

Microscopic identification:
1. **Powder:**
   (1) Aerial part of *Dianthus superbus*: Yellowish-green or yellowish-brown. Fibers and crystal fibers relatively numerous, 10~38 μm in diameter, pit canals indistinct, lumen narrow; some fiber bundles surrounded by cells containing clusters of calcium oxalate, forming crystal fibers. Clusters of calcium oxalate relatively numerous, 7~85 μm in diameter. Non-glandular hairs 2 types: one type (margins of bract) is 1- to 3-celled, wall thin, 5~12 μm in diameter; the other type is 1- to 2-celled, clavate, the apex obtusely rounded, 10~13 μm in diameter, with strip-shaped cutinized striations on the surface. Upper epidermal cells of leaf subpolygonal in surface view, anticlinal walls moniliform thickened, with sparsely cutinized striations on the surface. Stomata diacytic, anomocytic occasionally found. Pollen grains spheroidal, 31~75 μm in diameter, with scattered pits, 10~17, with reticular striations on the surface. Sclerenchymatous cells of pith of stem subrectangular, 3.7~9.3 μm in diameter, wall 3~8 μm thick, slightly lignified, pit canals sparse.
   (2) Aerial part of *Dianthus chinensis*: Yellowish-green. Fibers mostly in bundles, 8~22 μm in diameter, pit canals indistinct, lumen linear; some cells surrounded by cells containing clusters of calcium oxalate, forming crystal fibers. Clusters of calcium oxalate relatively numerous, 5~75 μm in diameter. Non-glandular hairs 1- to 11-celled, up to 300 μm in length, 7~33 μm in diameter, some lumens contain yellowish-brown contents. Leaf margins with cone-like protuberance. Pollen grains spheroidal, 27~53 μm in diameter, with scattered pits, 9~14, with reticular striations on the surface.

Thin layer chromatographic identification test (General rule 1010.3):
1. Sample solution: Add 1.0 g of powdered sample to 10 mL of methanol, ultrasonicate for 30 minutes, cool, filter, make up the filtrate to 10 mL, and evaporate the solution to 3 mL.
2. Reference drug solution: Use 1.0 g of the reference drug as the same method described above.
3. Procedure: Use silica gel F_{254} as the coating substance and the supernatant of *n*-butanol, glacial acetic acid and water (4:1:5) as the developing solvent. Apply 1 μL of each of the above solutions to the plate. Once the top of the solvent rise to about 5~10 cm from the origin, dry in air. Spray a solution of aluminum chloride in ethanol ($AlC1_3$/EtOH TS), and dry with hot air. Examine under the ultraviolet light at 365 nm. The spots in the chromatogram obtained from the sample solution correspond in R_f values and color to the spots in the chromatogram obtained from the reference drug solution.

Impurities and other requirements:
1. Loss on drying: Not more than 11.0% under heating at 105℃ for 5 hours (General rule 5008).
2. Total ash: Not more than 12.0% (General rule 5004).

3. Acid-insoluble ash: Not more than 2.0% (General rule 5004).

Assay:
1. Water extractives: Carry out the method for determination of water extractives (General rule 5006).
2. Dilute ethanol extractives: Carry out the method for determination of dilute ethanol-soluble extractives (General rule 5006).

Storage: Store in a ventilated and dry place.
Usage: Dampness-draining diuretic medicinal.
Dosage: 9~15 g.
Precaution and warning: Used with caution in pregnancy.

DICTAMNI RADICIS CORTEX
白鮮皮
Bai Sian Pi / Bai Xian Pi
Densefruit Pittany Rootbark

Densefruit pittany rootbark is the dried bark of root of *Dictamnus dasycarpus* Turcz. (Fam. Rutaceae).
It contains not less than 15.0% of dilute ethanol-soluble extractives and not less than 20.0% of water extractives.

Description: Quilled, 5~15 cm in length, 1~2 cm in diameter, 2~5 mm thick. Outer surface grayish-white or pale yellow, with fine wrinkles and rootlet scars, occasionally remained with cork, frequently with small protruding granular dots; inner surface almost whitish, with fine longitudinal striations. Texture fragile, easily broken, dusting on breaking. Odor, muttony; taste, slightly bitter.

Microscopic identification:
1. **Transverse section:** Outermost layer composed of 1 layer of epidermis covered with cuticle, cells in subrectangular or subsquare, occasionally broken. Cork composed of 6~14 layers of subrectangular or subsquare cells, slightly lignified, yellowish-brown. Cortex occupy 1/4~1/5 portion of the bark of root, 12~16 layered, composed of parenchymatous cells and fibers; parenchymatous cells subrectangular, subsquare or subpolygonal, scattered with clusters of calcium oxalate; fibers individually scattered or linked by 2~3, yellow, cells subrectangular, subrounded, subovate, suboblong or subpolygonal, 24~110 μm in diameter, walls thickened, with distinct striations. Rays distinct, 2~3 layered, growing to strip cells from outer to inner, cells subrectangular, subsquare or suboblong, scattered with clefts.
2. **Powder:** Pale yellowish-white. Cork cells subsquare, subpolygonal or subrectangular, slightly lignified. Fibers or phloem fibers yellow, 24~110 μm in diameter, walls thickened, with distinct striations, stone cell-shaped. Clusters of calcium oxalate, 5~33 μm in diameter, scattered or existed in parenchymatous cells.

Thin layer chromatographic identification test (General rule 1010.3):
1. Sample solution: Add 1.0 g of powdered sample to 20 mL of methanol, ultrasonicate for 10 minutes, filter and use the filtrate.
2. Reference drug solution: Use 1.0 g of the reference drug as the same method described above.
3. Procedure: Use silica gel F_{254} as the coating substance and a solution of *n*-hexane and ethyl acetate (3:2) as the developing solvent. Apply 5 μL of each of the above solutions to the plate. Once the top of the solvent rise to about 5~10 cm from the origin, dry in air and expose to iodine vapor until the spots become visible. The spots in the chromatogram obtained from the sample solution correspond in R_f values and color to the spots in the chromatogram obtained from the reference drug solution.

Impurities and other requirements:
1. Loss on drying: Not more than 15.0% under heating at 105℃ for 5 hours (General rule 5008).
2. Total ash: Not more than 12.0% (General rule 5004).
3. Acid-insoluble ash: Not more than 4.0% (General rule 5004).

Assay:
1. Water extractives: Carry out the method for determination of water extractives (General rule 5006).
2. Dilute ethanol extractives: Carry out the method for determination of dilute ethanol-soluble extractives (General rule 5006).

Storage: Store in a ventilated and dry place, and protect from mold.
Usage: Heat-clearing medicinal (Heat-clearing and dampness-drying medicinal).
Dosage: 5~9 g.

DIOSCOREAE HYPOGLAUCAE RHIZOMA
粉萆薢
Fen Bei Jie / Fen Bei Jie
Hypoglaucous Collett Yam Rhizome

Hypoglaucous Collett yam rhizome is the dried rhizome of *Dioscorea hypoglauca* Palibin (Fam. Dioscoreaceae).
It contains not less than 6.0% of dilute ethanol-soluble extractives and not less than 6.0% of water extractives.

Description: Bamboo-like or massive, subround, branched. Externally brownish-yellow, crumpled, often remained with fibrous root. Sliced pieces irregularly thin slices, edge uneven, outer bark yellowish-brown or brownish-black, 1.5~2.5 cm in diameter, 1~3 mm thick,

margin brown, slightly curved, with root scars, cut surface yellowish-white, starchy, scattered with yellow dots and striations of vascular bundles. Texture loose, slightly tenacious. Odor, slight; taste, pungent and slightly bitter.

Microscopic identification:

1. **Transverse section:** Cork composed of 4~10 rows of cork cells. Cortex relatively narrow, parenchymatous cells arranged tangentially, pits distinct. Mucilage cells slightly arranged in a ring, flattened-rounded, elongated tangentially, 100~180 μm in diameter, containing raphides of calcium oxalate. Stele well developed, parenchymatous cells large, containing abundant starch granules. Vascular bundles collateral, scattered sparsely or arranged in a ring, xylem vessels 15~60 μm in diameter, sieve tube groups of phloem slightly semicircular-shaped.
2. **Powder:** Yellowish-white. Lignified parenchymatous cells long-subfusiform or polygonal, colorless or pale yellow, 20~104 μm in diameter and 50~250 μm in length, wall slightly thickened and lignified, pits large and dense. Vessels mainly bordered-pitted, 15~60 μm in diameter. Fibers slender, 12~20 μm in diameter, wall 4~7 μm thick, with distinct pit canals. Simple starch granules subrounded or conchoidal, 5~40 μm in diameter and up to 55 μm in length, hilum indistinct, striations faintly present; compound granules composed of 2~4 components. Raphides of calcium oxalate mostly scattered in bundles, 55~120 μm in length and up to 4 μm in diameter.

Thin layer chromatographic identification test (General rule 1010.3):

1. Sample solution: Add 0.5 g of powdered sample to 25 mL of methanol, ultrasonicate for 30 minutes, cool, filter, evaporate the filtrate to dryness, and make up to 2 mL.
2. Reference drug solution: Use 0.5 g of the reference drug as the same method described above.
3. Procedure: Use silica gel F_{254} as the coating substance and the lower layer of a solution of chloroform, methanol and water (13:7:2) below 10 ℃ as the developing solvent. Apply 5 μL of each of the above solutions to the plate. Once the top of the solvent rise to about 5~10 cm from the origin, dry in air. Spray with a 10% solution of sulfuric acid in ethanol (H_2SO_4/EtOH TS), heat until the spots become visible, and examine under visible light. The spots in the chromatogram obtained from the sample solution correspond in R_f values and color to the spots in the chromatogram obtained from the reference drug solution.

Impurities and other requirements:

1. Loss on drying: Not more than 11.0% under heating at 105℃ for 5 hours (General rule 5008).
2. Total ash: Not more than 3.0% (General rule 5004).
3. Acid-insoluble ash: Not more than 1.0% (General rule 5004).

Assay:

1. Water extractives: Carry out the method for determination of water extractives (General rule 5006).
2. Dilute ethanol extractives: Carry out the method for determination of dilute ethanol-soluble extractives (General rule 5006).

Storage: Store in a cool and dry place, and protect from moisture and insects.
Usage: Dampness-dispelling medicinal.
Dosage: 9~15 g.

DIOSCOREAE RHIZOMA
山藥
Shan Yao / Shan Yao
Chinese Yam

Chinese yam is the dried rhizome of *Dioscorea opposita* Thunb., *Dioscorea doryphora* Hance or *Dioscorea japonica* Thunb. var. *pseudojaponica* (Hayata) Yamam. (Fam. Dioscoreaceae).

Description: Cylindrical, the two ends truncate, about up to 20 cm in length, 1.3~4 cm in diameter. Externally white or yellowish-white, smooth, with fine and brown vascular bundle lineolatus. Texture heavy and compact, uneasily broken, fracture white, starchy. Odorless; taste, weak and slightly sour, viscous on chewing.

Microscopic identification:

1. **Powder:** Off-white. Simple starch granules compressed-ovoid, subrounded, deltoid-ovoid or oblong, 8~35 μm in diameter, up to 48 μm long, hilum dotted, V-shaped, cruciate or shortly cleft at the small end, striations distinct; few compound starch granules, usually composed of 2~3 granules. Raphides of calcium oxalate large, existed in mucilage cells, 80~240 μm long and needle crystals 2~5 μm in diameter; apex slightly acute or truncate, slightly square in fracture surface. Bordered-pitted, reticulate, spiral and annular vessels, and a few fibers also exist.

Thin layer chromatographic identification test (General rule 1010.3):

1. Sample solution: Add 5.0 g of powdered sample to 30 mL of dichloromethane, heat under reflux for 2 hours and filter, evaporate the filtrate to dryness, dissolve the residue in 1 mL of dichloromethane.
2. Reference drug solution: Use 5.0 g of the reference drug as the same method described above.
3. Procedure: Use silica gel F_{254} as the coating substance and a solution of ethyl acetate, methanol

and concentrated ammonia solution (9:1:0.5) as the developing solvent. Apply 4 μL of each of the above solutions to the plate. Once the top of the solvent rise to about 5~10 cm from the origin, dry in air. Spray with a 10% solution of phosphomolybdic acid in ethanol (Phosphomolybdic Acid/ EtOH TS) and heat at 105 ℃ until the spots become visible. The spots in the chromatogram obtained from the sample solution correspond in R_f values and color to the spots in the chromatogram obtained from the reference drug solution.

Impurities and other requirements:

1. Loss on drying: Not more than 15.0% under heating at 105℃ for 5 hours (General rule 5008).
2. Total ash: Not more than 6.0% (General rule 5004).
3. Acid-insoluble ash: Not more than 0.5% (General rule 5004).
4. Sulfur dioxide: Not more than 500.0 ppm (General rule 3051).
5. Total heavy metals: Not more than 10.0 ppm (General rule 3005).
6. Arsenic (As): Not more than 5.0 ppm (General rule 3006, 3049, 3050).

Storage: Refrigerate or store in a cool and dry place, and protect from insects.
Usage: Tonifying and replenishing medicinal (Qi-tonifying medicinal).
Dosage: 15~30 g.

DIPSACI RADIX
續斷
Syu Duan / Xu Duan
Dipsacus Root

Dipsacus root is the dried root of *Dipsacus asperoides* C. Y. Cheng et T. M. Ai (Fam. Dipsacaceae).
It contains not less than 19.0% of dilute ethanol-soluble extractives and not less than 24.0% of water extractives.

Description: Cylindrical, slightly flattened, some slightly curved, 5~15 cm in length, 0.5~2 cm in diameter. Externally yellowish-brown or grayish-brown, with distinctly twistedly longitudinal wrinkles and furrows, showing transversal lenticels and sparse rootlet scars. Texture soft and hardened after long storage, easily broken, fracture uneven, bark dark green or brown, the outer part brown or pale brown; wood yellowish-brown, vessel bundles arranged radially. Odor, slightly aromatic; taste, bitter, slightly sweet and then astringent.

Microscopic identification:

1. **Transverse section:** Cork composed of several rows of cells. Phelloderm relatively narrow. Groups of sieve tubes sparsely scattered in the phloem. Cambium in a ring. Xylem rays broad, vessels dense near the cambium and lessened inward, usually singly scattered or 2~3 in groups. Pith small. Parenchymatous cells contain clusters of calcium oxalate.
2. **Powder:** Yellowish-brown. Clusters of calcium oxalate extremely numerous, 15~50 μm in diameter, scattered in shrunken parenchymatous cells, usually several arranged as a row. Fusiform parenchymatous cells with fine and oblique crisscross striations, wall slightly thickened. Bordered-pitted and reticulate vessels about to 72~90 μm in diameter. Cork cells pale brown, subpolygonal or elongated-polygonal in surface view, wall thin.

Thin layer chromatographic identification test (General rule 1010.3):

1. Sample solution: Add 1.0 g of powdered sample to 15 mL of methanol, ultrasonicate for 30 minutes, filter and use the filtrate.
2. Reference drug solution: Use 1.0 g of the reference drug as the same method described above.
3. Procedure: Use silica gel F_{254} as the coating substance and a solution of ethyl acetate, methanol and water (8:2:1) as the developing solvent. Apply 10 μL of each of the above solutions to the plate. Once the top of the solvent rise to about 5~10 cm from the origin, dry in air. Examine under the ultraviolet light at 254 nm. The spots in the chromatogram obtained from the sample solution correspond in R_f values and color to the spots in the chromatogram obtained from the reference drug solution.

Impurities and other requirements:

1. Loss on drying: Not more than 10.0% under heating at 105℃ for 5 hours (General rule 5008).
2. Total ash: Not more than 14.0% (General rule 5004).
3. Acid-insoluble ash: Not more than 3.0% (General rule 5004).

Assay:

1. Water extractives: Carry out the method for determination of water extractives (General rule 5006).
2. Dilute ethanol extractives: Carry out the method for determination of dilute ethanol-soluble extractives (General rule 5006).

Storage: Refrigerate or store in a cool and dry place, and protect from insects.
Usage: Tonifying and replenishing medicinal (Yang-assisting medicinal).
Dosage: 9~15 g.

DRACONIS SANGUIS
血竭
Sie Jie / Xie Jie
Dragon's Blood

Dragon's blood is the prepared resin of the fruit of *Daemonorops draco* Bl. (Fam. Palmae).
It contains not less than 1.0% of dracorhodin.

Description: Subsquare or subrounded, externally dark red or reddish-brown, lustrous. Texture fragile and hard, fracture reddish-brown, lustrous as glass-like. Ground powder brick red, giving unpleasant smoke when burned, sand-like on chewing. Insoluble in water, softened in hot water. Odor, slight; taste, weak.

Thin layer chromatographic identification test (General rule 1010.3):

1. Sample solution: Add 0.1 g of powdered sample to 10 mL of ethyl ether, shake and mix for 10 minutes, filter and use the filtrate.
2. Reference drug solution: Use 0.1 g of the reference drug as the same method described above.
3. Procedure: Use silica gel F_{254} as the coating substance and a solution of chloroform and methanol (19:1) as the developing solvent. Apply 10 μL of each of the above solutions to the plate. Once the top of the solvent rise to about 5~10 cm from the origin, dry in air. Examine under visible light. The spots in the chromatogram obtained from the sample solution correspond in R_f values and color to the spots in the chromatogram obtained from the reference drug solution.

Impurities and other requirements:

1. Total ash: Not more than 4.0% (General rule 5004).
2. Acid-insoluble ash: Not more than 3.0% (General rule 5004).

Assay:

1. Dracorhodin:
   (1) Mobile phase: A solution of acetonitrile and 0.05 mol/L sodium dihydrogen phosphate solution (50:50). The ratio varies as required.
   (2) Reference standard solution: Weigh accurately 9.0 mg of dracorhodin perchlorate, transfer to a 50-mL amber volumetric flask, dissolve in 3% phosphoric acid with methanol to produce a 50 mL solution, and mix well. Transfer 1 mL of the mixture to a 5-mL amber volumetric flask, add methanol to volume, mix well (containing 26 μg of dracorhodin per mL) (the weight of dracohodin is equivalent to 1/1.377 of the weight of dracorhodin perchlorate).
   (3) Sample solution: Weigh accurately 0.05~0.15 g of powdered sample, transfer to a tube with stopper, add accurately 10 mL of 3% phosphoric acid in methanol, stopper tightly, shake for 3 minutes, filter, weigh accurately 1 mL of the successive filtrate, transfer to a 5-mL amber volumetric flask, add methanol to volume and mix well.
   (4) Chromatographic system: The liquid chromatography is equipped with an ultraviolet absorption photometer (wavelength: 440 nm) and a column packed with octadecylsilanized silica gel. The number of theoretical plates of the peak of dracorhodin should not be less than 4,000
   (5) Procedure: Inject accurately 10 μL of each of the reference standard solution and the sample solution into the liquid chromatography apparatus, and calculate the content.

Storage: Store in a cool and dry place, and protect from moisture.
Usage: Blood-regulating medicinal (Blood-activating and stasis-dispelling medicinal).
Dosage: 1~2 g.

ECKLONIAE THALLUS
LAMINARIAE THALLUS
昆布
Kun Bu / Kun Bu
Kelp

Kelp is the dried thalline of *Laminaria japonica* Aresch. (Fam. Laminariaceae) or *Ecklonia kurome* Okam. (Fam. Alariaceae).
It contains not less than 4.0% of dilute ethanol-soluble extractives, not less than 5.0% of water extractives and not less than 0.35% of iodine of *Laminaria japonica*. It contains not less than 0.20% of iodine of *Ecklonia kurome*.

Description:

1. Thalline of *Laminaria japonica*: Slender strap, entire, often crumpled and winded up into masses or bundles. Blackish-brown, greenish-brown or brownish-green, externally with white frost-like powder. After soaking in water, swollen into a flattened long strap, 50~150 cm in length, 10~40 cm in width, relatively thick in the center, thinner and undulate on the edges, coriaceous, externally slimy, remained with compressed-cylindrical stalk, fracture fibrous. Odor, seaweed-like; taste, salty.
2. Thalline of *Ecklonia kurome*: Crumpled and winded up into irregular masses. Black, externally with white frost-like powder, thin. After soaking in water, swollen into a flattened phylloid, 15~26 cm in length, 15~26 cm in width, about 1.6 mm thick, pinnatipartite at the both sides, lobes long-ligulate, margin serrate or entire. Texture soft and smooth. Odor, seaweed-like; taste, salty.

Identification:

1. Thick, swollen on soaking in water, surface smooth and viscous with transparent mucilage. When twisted by fingers, *Laminaria japonica* is not laminated but *Ecklonia kurome*.
2. Macerate about 10.0 g of powdered sample in 200 mL of distilled water for 4 hours, filter, and evaporate the filtrate to about 100 mL. Take 2~3 mL of the evaporated solution, add 1 drop of nitric acid and several drops of silver nitrate, a yellow colloidal precipitate is produced and slightly soluble in ammonia but nitric acid.

Impurities and other requirements:

1. Loss on drying: Not more than 18.0% of thalline of *Laminaria japonica* under heating at 105℃ for 5 hours (General rule 5008).

Assay:

1. Iodine:
   (1) Sample solution: Macerate about 10.0 g of the small pieces to a crucible, ignite gently, keep for 10 minutes whenever the temperature raise to 100℃, and keep for 40 minutes at 400~500℃. Cool and place the residue in a beaker. Add 100 mL of water, boil for about 5 minutes and filter. Treat the residue with further 2 quantities of 100 mL of water, filter and combine the filtrates, wash the residue with 3 quantities of hot water, combine the washings and use the filtrate, and evaporate to about 80 mL. Cool, transfer to a 100-mL volumetric flask and add water to volume.
   (2) Procedure: Transfer accurately 5 mL to a conical flask with stopper, add 50 mL of water and 2 drops of methyl red, add drops of dilute sulfuric acid solution until the solution color turn to red. Add 5 mL of freshly prepared bromine, heat to boil, add 5 mL of a 20% solution of sodium formate along the flask wall, and heat for 10~15 minutes again. Wash the flask wall with hot water, cool, add 5 mL of dilute sulfuric acid and 5 mL of a 15% solution of potassium iodide, titrate immediately with sodium thiosulfate (0.01 mL/L) is equivalent to 0.2215 mg of iodine.
2. Water extractives: Carry out the method for determination of water extractives (General rule 5006).
3. Dilute ethanol extractives: Carry out the method for determination of dilute ethanol-soluble extractives (General rule 5006).

Storage: Store in a dry place.
Usage: Phlegm-dispelling medicinal (Heat-phlegm clearing and resolving medicinal).
Dosage: 6~12 g for *Laminaria japonica*; 3~10 g for *Ecklonia kurome*.

ECLIPTAE HERBA
墨旱蓮
Mo Han Lian / Mo Han Lian
Yerbadetajo Herb

Yerbadetajo herb is the dried aerial part of *Eclipta prostrata* L. (Fam. Compositae).
It contains not less than 10.0% of dilute ethanol-soluble extractives, not less than 10.0% of water extractives and not less than 0.04%of wedelolactone.

Description: White pubescences wholly. Stems cylindrical or subsquare, with longitudinal ridges, mostly branched, about 30 cm in length, 2~6 mm in diameter; externally greenish-brown or dark green; texture compact, fracture fibrous, yellowish-white, with white and lax pith in the center or hollowed. Leaves opposite, lamina crumpled and rolled or broken, long-lanceolate as whole, margin entire or shallowly dentate, grayish-green. Heads terminal or axillary, 2~6 mm in diameter. Achenes elliptical and flattened, 2~3 mm in length, brown or black. Odor, slight; taste, slightly salty.

Microscopic identification:

1. **Transverse section:**
   (1) Stem: Epidermis 1 row; inside showing 3~6 rows of parenchymatous cells, subrounded or subsquare, arranged densely. Cortex composed of polygonal or subrounded cells, spongy tissue-like, cells with numerous boundaries, large fiber cells with wall lignified, subtriangular, 75~100 μm in diameter. Pericyclic fibers scattered. Phloem and cambium indistinct. Xylem relatively broad, vessels 15~25 μm in diameter, subrounded or polygonal. Fibers lignified, singly scattered or in bundles. Rays composed of 2~6 rows of parenchymatous cells, arranged radially. Pith in the center composed of large and subrounded parenchymatous cells.
   (2) Leaf: Upper epidermal cells subsquare or rectangular, cells varying in size. Lower epidermal cells relatively small, stomata numerous. Both upper and lower epidermis contain hairs. Inside upper and lower epidermis of main vein contain 2~3 rows of collenchymatous cells. Palisade cells 1 row, spongy tissue 4~5 rows. Vascular bundles of main vein 3~5 in collateral type, xylem vessels arranged in rows, phloem cells narrow.
2. **Powder:** Grayish-green. Epidermal cells with thin wall, suboblong. Cortex in spongy tissue-shaped. Fibers long-fusiform, walls thickened and lignified, singly scattered or in bundles. Spiral vessels 15~25 μm in diameter. Pith composed of large parenchymatous cells, 300~350 μm in diameter. Non-glandular hairs mostly composed of 3 cells, 260~700 μm in length.

Thin layer chromatographic identification test (General rule 1010.3):

1. Sample solution: Add 2.5 g of powdered sample to 10 mL of ethanol, ultrasonicate for 1 hour, filter, evaporate the filtrate to dryness and make up the residue to 5 mL.
2. Reference drug solution: Use 2.5 g of the reference drug as the same method described above.
3. Procedure: Use silica gel F_{254} as the coating substance and a solution of *n*-hexane and ethanol (1:1) as the developing solvent. Apply 10 μL of each of the above solutions to the plate. Once the top of the solvent rise to about 5~10 cm from the origin, dry in air. Examine under the ultraviolet light at 365 nm. The spots in the chromatogram obtained from the sample solution correspond in R_f values and color to the spots in the chromatogram obtained from the reference drug solution.

Impurities and other requirements:

1. Loss on drying: Not more than 14.0% under heating at 105℃ for 5 hours (General rule 5008).
2. Total ash: Not more than 14.0% (General rule 5004).
3. Acid-insoluble ash: Not more than 4.0% (General rule 5004).

Assay:

1. Wedelolactone:
   (1) Mobile phase: A solution of methanol as the mobile phase A, and a solution of 0.5% acetic acid as the mobile phase B.
   (2) Reference standard solution: Weigh accurately a quantity of wedelolactone and dissolve in methanol to produce a solution containing 10 μg per mL.
   (3) Sample solution: Weigh accurately 1.0 g of the powdered sample, transfer to a conical flask with stopper, accurately add 50 mL of 70% ethanol, weigh, heat under reflux for 1 hour, cool, weigh again, replenish the loss of the weight with 70% ethanol, mix well, filter and use the filtrate.
   (4) Chromatographic system: The liquid chromatography is equipped with an ultraviolet absorption photometer (wavelength: 351 nm) and a column packed with octadecylsilanized silica gel. Program the chromatographic system as follows The number of theoretical plates of the peak of wedelolactone should not be less than 6,000.

Time (min)	Mobile phase A (%)	Mobile phase B (%)
0~10	35-59	65-41
10~20	59	41

   (5) Procedure: Inject accurately 20 μL of each of the reference standard solution and the sample solution into the liquid chromatography apparatus, and calculate the content.
2. Water extractives: Carry out the method for determination of water extractives (General rule 5006).
3. Dilute ethanol extractives: Carry out the method for determination of dilute ethanol-soluble extractives (General rule 5006).

Storage: Store in a cool and dry place, and protect from moisture.
Usage: Dampness-dispelling medicinal.
Dosage: 6~12 g, used an appropriate amount of the fresh one.

EPHEDRAE HERBA
麻黃
Ma Huang / Ma Huang
Ephedra Herb

Ephedra herb is the dried herbaceous stem of *Ephedra sinica* Stapf, *Ephedra intermedia* Schrenk et C. A. Mey. or *Ephedra equisetina* Bge. (Fam. Ephedraceae).
It contains not less than 13.0% of dilute ethanol-soluble extractives, not less than 10.0% of water extractives and not less than 0.8% of total alkaloids, calculated with the total amount of ephedrine HCl and pseudoephedrine HCl.

Description:

1. Stem of *Ephedra sinica*: Slenderly cylindrical, infrequently branched, 1~2 mm in diameter. Some with a few woody stems. Externally pale green to yellowish-green, with fine longitudinal ridges. Nodes distinct, internodes 2~6 cm in length. Membranous scaly leaves on the nodes, 3~4 mm in length, with 2 lobes (rarely 3), the apex reversed, base tubular. Texture light, fragile, easily broken, dusting on breaking, fracture slightly fibrous with greenish-yellow edge and subrounded reddish-brown pith. Odor, slightly aromatic; taste, slightly bitter and astringent.
2. Stem of *Ephedra intermedia*: Frequently branched, 1~3 mm in diameter, with 18~28 longitudinal ridges, internodes 2~6 cm in length, externally pale green or yellowish-green, inner reddish-brown. Membranous scaly leaves 2~3 mm in length, with 3 lobes (rarely 2), about 1/3 upper apart from the stem, apex acute. Taste, slightly bitter and astringent.
3. Stem of *Ephedra equisetina:* Frequently branched, 1~1.5 mm in diameter, with 13~14 longitudinal ridges, internodes 1~3 cm in length. Membranous scaly leaves 1~2 mm in length, with 2 lobes (rarely 3), about 1/4 upper part apart from the stem, short-triangular, apex infrequently reversed.

Microscopic identification:

1. **Transverse section:**
   (1) Stem of *Ephedra sinica*: Subrounded and slightly oblate, margins with ridges in an undulating formation. Epidermal cells subsquare, outer walls thickened, covered with thick cuticle, with sunken stomata located between two ridges, subsidiary cells with walls lignified. Hypodermal fiber bundles located just between two ridges. Cortex just like mesophyll, containing chloroplast, scattered with fibers. Collateral vascular bundles of young stems 8~10, while that of old ones forming intrafascicular cambium, parenchymatous cells located outside. Phloem small, outside showing fiber bundles crescent-shaped. Cambium ring subrounded. Xylem linking into a ring, triangular, cells all lignified. Parenchymatous cells of pith usually containing brownish-red masses, surrounded by a few of fibers. Epidermal cells, cortex cells and fiber walls contain fine prisms of calcium oxalate or sandy crystals.
   (2) Stem of *Ephedra intermedia*: Vascular bundles 12~15. Cambium ring subtriangular. Fibers surrounding pith scattered or in bundles.
   (3) Stem of *Ephedra equisetina*: Vascular bundles 8~10. Cambium subrounded. Without fibers surrounding pith.
2. **Powder:** Brown or green. Epidermis fragments extremely numerous, cells rectangular, containing granular crystals, stomata peculiar, sunken, subsidiary cells dumbbell-shaped in lateral view; cuticle layer usually broken in irregularly strip-shaped masses. Fibers numerous, with thick wall, unlignified to lignified, slender, lumen narrow, usually indistinct, scattered with fine and abundant sandy and prism crystals. Parenchymatous cells of pith unlignified to lignified, usually containing reddish-purple or brown contents, mostly shedded. Tracheids with pits. Vessels occasionally found, spiral and pitted. Stone cells (nodes) relatively rare.

Thin layer chromatographic identification test (General rule 1010.3):

1. Sample solution: Add 1.0 g of powdered sample to 10 mL of methanol, heat and shake in the water bath for 5 minutes, cool, filter and use the filtrate.
2. Reference drug solution: Use 1.0 g of the reference drug as the same method described above.
3. Reference standard solution: Weigh accurately 10 mg of ephedrine HCl and dissolve in methanol to produce a solution containing 1.0 mg per mL.
4. Procedure: Use silica gel F_{254} as the coating substance and a solution of *n*-butanol, water and glacial acetic acid (7:4:2) as the developing solvent. Apply 5 μL of each of the above solutions to the plate. Once the top of the solvent rise to about 5~10 cm from the origin, dry in air. Spray with a solution of ninhydrin and heat at 105℃ for 5 minutes until the spots become visible. Examine under the visible light. The purplish-brown spots in the chromatogram obtained from the sample solution correspond in R_f values and color to the spots in the chromatogram obtained with the reference drug solution and the reference standard solution.

Impurities and other requirements:

1. Loss on drying: Not more than 9.0% under heating at 105℃ for 5 hours (General rule 5008).
2. Total ash: Not more than 12.0% (General rule 5004).
3. Acid-insoluble ash: Not more than 2.0% (General rule 5004).

Assay:

1. Ephedrine HCl and pseudoephedrine HCl:
   (1) Mobile phase: A solution of methanol and 0.092% phosphoric acid solution (It contains 0.04% triethylamine and 0.02% dibutylamine) (1.5:98.5). The ratio varies as required.
   (2) Reference standard solution: Weigh accurately a quantity of ephedrine HCl and pseudoephedrine HCl and dissolve in methanol to produce a solution containing 40 μg per mL of each.
   (3) Sample solution: Weigh accurately 0.5 g of the powdered sample, transfer to a conical flask with stopper, accurately add 50 mL of 1.44% phosphoric acid solution, weigh, ultrasonicate for 20 minutes, cool, weigh again, replenish the loss of the weight with 1.44% phosphoric acid solution, mix well, filter, use the filtrate.
   (4) Chromatographic system: The liquid chromatography is equipped with an ultraviolet absorption photometer (wave-length: 210 nm) and a column packed with ethyl ether linked phenyl silica gel. The number of theoretical plates of the peak of ephedrine HCl should not be less than 3,000.
   (5) Procedure: Inject accurately 10 μL of each of the reference standard solution and the sample solution into the liquid chromatography apparatus, and calculate the content.
2. Water extractives: Carry out the method for determination of water extractives (General rule 5006).
3. Dilute ethanol extractives: Carry out the method for determination of dilute ethanol-soluble extractives (General rule 5006).

Storage: Store in a ventilated and dry place, and protect from moisture.

Usage: Exterior-releasing medicinal (Wind-cold dispersing medicinal).
Dosage: 1.5~9 g.

EPIMEDII FOLIUM
淫羊藿
Yin Yang Huo / Yin Yang Huo
Epimedium Leaf

Epimedium leaf is the dried leaf of *Epimedium sagittatum* (Sieb. et Zucc.) Maxim., *Epimedium koreanum* Nakai or *Epimedium brevicornu* Maxim. and similar species (Fam. Berberidaceae).
It contains not less than 15.0% of dilute ethanol-soluble extractives, not less than 6.0% of water extractives and not less than 0.4% of icariin.

Description:
1. Leaf of *Epimedium sagittatum*: Leaves trifoliolate; petiole slender; leaflets oval or ovate-lanceolate, coriaceous, 4~9 cm in length, 2.5~5 cm in width, apex acuminate, upper brownish-green or grayish-green; lower grayish-green, sparsely covered with thick, short and pronated hairs or nearly glabrous; bilateral leaflets distinctly oblique at the base, outer lobe larger, margin with spinulose hairs. Odor, slight; taste, bitter.
2. Leaf of *Epimedium koreanum*: Leaves biternate; leaflets thin, chartaceous, ovate or elongated ovate, apex acuminate, base cordate, margin minutely serrate, serrate spinulose.
3. Leaf of *Epimedium brevicornu*: Leaves biternate; leaflets subcoriaceous, broadly ovate or nearly rounded.

Microscopic identification:
1. **Transverse section:**
   (1) Leaf of *Epimedium sagittatum*: In surface view, upper and lower epidermis with irregularly thickened moniliform anticlinal walls; lower epidermis with periclinal walls papilla-shaped protuberance, double circles shaped in surface view. Stomata and non-glandular hairs only presented in lower epidermis. Stomata anomocytic. Non-glandular hairs 5~23 cells, at the apex 1~7 cells, colorless, walls about 6 μm thick, apical cells extremely long, straight, blunt, turning right angle shaped, irregularly curved or twisted, lower cells pale brown, occasionally containing brown contents; a few of non-glandular hairs relatively long, up to more than 24-celled, lower cells short and flat, linking into bamboo-like shaped, all cells containing pale brown contents; a few of non-glandular hairs thick and short, 3~5 cells, wall thin with obtusely rounded apex. Idioblasts long, arranged longitudinally along veins, containing 1 to numerous column crystals of calcium oxalate, 15~40 μm in length, 4~13 μm in diameter. Clusters of calcium oxalate also visible, 9~41 μm in diameter, angles short and blunt, some composed of 1~2 prism crystals; prism crystals 5~25 μm in diameter.
   (2) Leaf of *Epimedium koreanum*: Non-glandular hairs mostly slim and short, 2~8 cells, straight or slightly curved, apical cells mostly long and acute, at the apex 1~3 cells, all cells containing yellowish-brown contents, basal cells with cutinized fine striations; the other non-glandular hairs thick and long, mainly presented in vein and leaf base, cells more than 30, mostly curved, lower cells short or flat, gradually elongated upwards, some cells shrunken or swollen, arranged alternately, apical cells with obtusely-rounded apex, some cells containing reddish-brown or yellowish-brown oil droplets. A few of non-glandular hairs 6~10 cells, apical cells with obtusely-rounded or acute apex.
   (3) Leaf of *Epimedium brevicornu*: Non-glandular hairs rare, mostly presented in vein or vein base, 3~14 cells, straight or curved, basal cells short, wall slightly thickened, cells elongated upwards, wall thin, apical cells undulated, hook-like, twisted, twisted reversely or straight, the apex obtusely-rounded, some cells shrunken, numerous or all cells containing brown contents. A few of non-glandular hairs relatively slim and short, cells rare, apical cells extremely long, the apex acute, containing brown contents.
2. **Powder:** Greenish-brown. Upper epidermal cells of leaf in surface view, wall thin and undulating, cells irregular in shape. Lower epidermal cells of leaf in surface view, stomata with 3~6 subsidairy cells, broken scars of glandular hairs and non-glandular hairs presented. Epidermal cells of stem in longitudinal view, cells subrectangular or flatten-rectangular, 2 layers, accompanied by fibers; fibers in bundles, slender. Parenchymatous cells in longitudinal view, cells subrectangular, rectangular or subsquare.

Thin layer chromatographic identification test (General rule 1010.3):
1. Sample solution: Add 0.5 g of powdered sample to 10 mL of methanol, shake for 5 minutes, stand, filter and use the filtrate.
2. Reference drug solution: Use 0.5 g of the reference drug as the same method described above.
3. Procedure: Use silica gel F_{254} as the coating substance and a solution of *n*-hexane and ethyl acetate (4:1) as the developing solvent. Apply 5 μL of each of the above solutions to the plate. Once the top of the solvent rise to about 5~10 cm from

the origin, dry in air. Examine under the ultraviolet light at 365 nm. The spots in the chromatogram obtained from the sample solution correspond in R_f values and color to the spots in the chromatogram obtained from the reference drug solution.

Impurities and other requirements:

1. Loss on drying: Not more than 14.0% under heating at 105℃ for 5 hours (General rule 5008).
2. Total ash: Not more than 8.0% (General rule 5004).
3. Acid-insoluble ash: Not more than 3.0% (General rule 5004).

Assay:

1. Icariin:
   (1) Mobile phase: A 1,000 mL solution of acetonitrile and water (30:70). The ratio varies as required.
   (2) Reference standard solution: Weigh accurately 10 mg of icariin and dissolve in methanol to produce a 100 mL solution containing 0.1 mg per mL.
   (3) Sample solution: Weigh accurately 200 mg of the powdered sample, add 20 mL of dilute ethanol, ultrasonicate for 1 hour, cool and filter, use the filtrate, add dilute ethanol to 25 mL, and mix well.
   (4) Chromatographic system: The liquid chromatography is equipped with an ultraviolet absorption photometer (wavelength: 270 nm) and a column (4~6 mm × 15~25 cm) packed with octadecylsilanized silica gel (5~10 μm in particle diameter).
   (5) Reproducibility of system: Inject reference standard solution into the liquid chromatography apparatus for five times, and record the peak areas. The relative standard deviation of the peak area of icariin should not be more than 1.5%.
   (6) Procedure: Inject accurately 10 μL of each of the reference standard solution and the sample solution into the liquid chromatography apparatus, and calculate the content.
2. Water extractives: Carry out the method for determination of water extractives (General rule 5006).
3. Dilute ethanol extractives: Carry out the method for determination of dilute ethanol-soluble extractives (General rule 5006).

Storage: Store in a ventilated and dry place.
Usage: Tonifying and replenishing medicinal (Yang-assisting medicinal).
Dosage: 3~10 g.

EQUISETI HIEMALIS HERBA
木賊
Mu Zei / Mu Zei
Scouring Rush Herb

Scouring rush herb is the dried aerial part of *Equisetum hyemale* L. (Fam. Equisetaceae).
It contains not less than 8.0% of dilute ethanol-soluble extractives, not less than 8.0% of water extractives and not less than 0.20% of kaempferol.

Description: Long tubular, unbranched, varying in length. Externally grayish-green or yellowish-green, nodes distinct with blackish-brown scaly leaves, internodes with 18~30 longitudinal ridges, ridges with shiny warts, rough. Texture light, fragile, easily broken, fracture hollow. Odor, slight; taste, sweet, slightly bitter.

Microscopic identification:

1. **Transverse section:** Epidermis covered with undulating cuticle, surface with grooves and ridges; epidermal cells square or rectangular, wall extremely thickened, arranged neatly and densely, distinct membrane pores on cell walls play a role as connection between adjacent cells, unlignified. Fibers mostly in bundles, linked with epidermis, long-fusiform, walls thickened and unlignified. Parenchymatous cells located on both side, subrounded, ovate or oblong, thick-walled, filled with yellow contents and starch granules; starch granules relatively small, round or oblong. Vascular bundles collateral. Phloem cell extremely small and regular, rectangular, oblong or polygonal, containing yellowish-brown contents. Xylem relatively undeveloped, vessels arranged in 2 rows, each row composed of 3~6 vessels, wall thickened and lignified to slightly lignified, mainly spiral. Internal parenchymatous cells relatively large, varing in size, cell membrane undulating or incompletely broken.
2. **Powder:** Grayish-green. Epidermal cells of stem rectangular or strip-shaped in surface view, anticlinal walls extremely thickened and undulating, arranged neatly, lumen contains yellowish-brown pigment granules; flat-rectangular in sectional view, wall thickened, containing pit canals, some (on ridges) outer walls bulged, with subrounded silica protuberances. Sunken stomata arranged in longitudinal, subrounded or elliptical, with many horizontally parallel thickened strips in guard cells. Epidermal cells of leaf sheath rectangular or long-fusiform in surface view, anticlinal walls thin or slightly thickened; relatively straight in grooves or undulating on ridges; stomata subrounded. Fibers long-fusiform, 12~37 μm in diameter, wall 2~9 μm thick, pits very small, V-shaped or oblique cleft-shaped, pits canals relatively distinct. Scalariform tracheids 8~17 μm in diameter. Endodermal cells also present.

Thin layer chromatographic identification test (General rule 1010.3):

1. Sample solution: Add 1.0 g of powdered sample to 25 mL of 75% methanol and 1 mL of hydrochloric acid, heat under reflux for 1 hour, filter and evaporate the filtrate to dryness, dissolve the residue in 10 mL of water, extract shaking twice each with 10 mL of ethyl acetate, combine the ethyl acetate extracts and evaporate to dryness, dissolve the residue in 1 mL of methanol.
2. Reference drug solution: Use 1.0 g of the reference drug as the same method described above.
3. Reference standard solution: Weigh accurately a quantity of kaempferol and dissolve in methanol to produce a solution containing 1.0 mg per mL.
4. Procedure: Use silica gel F_{254} as the coating substance and a solution of cyclohexane, ethyl acetate and formic acid (8:4:0.4) as the developing solvent. Apply 5 μL of each of the sample solution and reference drug solution and 2 μL of the reference standard solution to the plate. Once the top of the solvent rise to about 5~10 cm from the origin, dry in air. Spray with a 5% solution of aluminum chloride in ethanol ($AlC1_3$/EtOH TS), and examine under ultraviolet light at 365 nm. The spots in the chromatogram obtained from the sample solution correspond in R_f values and color to the spots in the chromatogram obtained from the reference drug solution and the reference standard solution.

Impurities and other requirements:

1. Loss on drying: Not more than 13.0% under heating at 105℃ for 5 hours (General rule 5008).
2. Total ash: Not more than 15.0% (General rule 5004).
3. Acid-insoluble ash: Not more than 10.0% (General rule 5004).

Assay:

1. Kaempferol:
   (1) Mobile phase: A solution of acetonitrile and 0.4% phosphoric acid solution (50:50). The ratio varies as required.
   (2) Reference standard solution: Weigh accurately a quantity of kaempferol and dissolve in 75% methanol to produce a solution containing 20 μg per mL.
   (3) Sample solution: Weigh accurately 0.75 g of powdered sample in a conical flask with stopper, add accurately 50 mL of 75% methanol, stopper tightly and weigh, heat under reflux for 1 hour, cool, weigh again, replenish the loss weight with 75% methanol, mix well and filter. Measure accurately 20 mL of successive filtrate in a filter, add accurately 5 mL of hydrochloric acid, place in a water bath for 1 hour, and cool. Transfer to a 50-mL volumetric flask, diluted with 75% methanol to volume and mix well.
   (4) Chromatographic system: The liquid chromatography is equipped with an ultraviolet absorption photometer (wavelength: 365 nm) and a column packed with octadecylsilanized silica gel. The number of theoretical plates of the peak of kaempferol should not be less than 3,000.
   (5) Procedure: Inject accurately 10 μL of each of the reference standard solution and the sample solution into the liquid chromatography apparatus, and calculate the content.
2. Water extractives: Carry out the method for determination of water extractives (General rule 5006).
3. Dilute ethanol extractives: Carry out the method for determination of dilute ethanol-soluble extractives (General rule 5006).

Storage: Store in a cool and dry place.
Usage: Exterior-releasing medicinal (Wind-heat dispersing medicinal).
Dosage: 3~9 g.

ERIOBOTRYAE FOLIUM
枇杷葉
Pi Pa Ye / Pi Pa Ye
Loquat Leaf

Loquat leaf is the dried leaf of *Eriobotrya japonica* (Thunb.) Lindl. (Fam. Rosaceae).
It contains not less than 16.0% of dilute ethanol-soluble extractives and not less than 10.0% of water extractives.

Description: Obovate or oblong, 12~25 cm in length, 5~10 cm in width. Apex acute, base cuneate, margin serrate at the upper part and entire near base. Upper surface yellowish-brown or grayish-green, lustrous, midrib on lower surface distinctly protuberant, lateral veins pinnate, 10~20 pairs, with yellowish-brown tomenta, coriaceous and fragile, petioles short. Odor, slight; taste, bitter.

Microscopic identification:

1. **Transverse section:** The upper and lower epidermis all covered with cuticle and non-glandular hairs. Upper epidermis composed of 3~5 rows of subsquare sclerenchymatous cells, containing round to oblong mucilage cells. Lower epidermis usually contain stomata and non-glandular hairs; unicellular non-glandular hairs 700~1700 μm in length, 30~70 μm in diameter, mostly curved into a V-shape near midrib. Palisade tissue composed of 3~5 rows of rectangular cells, spongy tissue arranged loosely, composed of subsquare or polygonal cells, both palisade tissue and spongy tissue all containing prisms and clusters of calcium oxalate. Collateral vascular bundles of midrib nearly ringed. Pericycle

fiber bundles arranged in an interrupted ring, walls lignified, surrounded by parenchymatous cells containing prisms of calcium oxalate, forming crystal fibers; parenchymatous tissue scattered with mucilage cells and prisms of calcium oxalate.

2. **Powder:** Yellowish-green. Upper epidermal cells moniliform thickened, lower epidermal cells irregularly shaped. Non-glandular hairs unicellular, curved and some folded to V-shaped, blunt top and narrow base. Mucilage cells subrounded, 50~100 μm in length, 25~60 μm in diameter. Stomata oblong, 20~30 μm in diameter, with 4~8 subsidiary cells. Vessels spiral, 10~20 μm in diameter. Fibers slender, 150~350 μm in length, 10~20 μm in diameter, fiber bundles occasionally surrounded by rhombic or double conical of calcium oxalate.

Thin layer chromatographic identification test (General rule 1010.3):

1. Sample solution: Add 1.0 g of powdered sample to 10 mL of methanol, ultrasonicate for 30 minutes, filter and use the filtrate.
2. Reference drug solution: Use 1.0 g of the reference drug as the same method described above.
3. Reference standard solution: Weigh accurately a quantity of ursolic acid and dissolve in methanol to produce a solution containing 1.0 mg per mL.
4. Procedure: Use silica gel F_{254} as the coating substance and a solution of toluene and ethyl acetate (1:1) as the developing solvent. Apply 5 μL of each of the above solutions to the plate. Once the top of the solvent rise to about 5~10 cm from the origin, dry in air. Spray with a 10% solution of sulfuric acid in ethanol, heat at 105℃ until the spots become visible. The spots in the chromatogram obtained from the sample solution correspond in R_f values and color to the spots in the chromatogram obtained from the reference drug solution and the reference standard solution.

Impurities and other requirements:

1. Loss on drying: Not more than 12.0% under heating at 105℃ for 5 hours (General rule 5008).
2. Total ash: Not more than 12.0% (General rule 5004).
3. Acid-insoluble ash: Not more than 2.0% (General rule 5004).
4. Cadmium (Cd): Not more than 2.0 ppm (General rule 3049, 3050).
5. Lead (Pb): Not more than 30.0 ppm (General rule 3007, 3049, 3050).
6. Mercury (Hg): Not more than 2.0 ppm (General rule 3049).
7. Pesticide residues:
   (1) The total DDT content: Not more than 0.2 ppm (General rule 3052).
   (2) The total BHC content: Not more than 0.2 ppm (General rule 3052).

Assay:

1. Water extractives: Carry out the method for determination of water extractives (General rule 5006).
2. Dilute ethanol extractives: Carry out the method for determination of dilute ethanol-soluble extractives (General rule 5006).

Storage: Store in a cool and dry place, and protect from moisture.
Usage: Phlegm-dispelling, cough-suppressing and panting-calming medicinal.
Dosage: 6~9 g.

ERIOCAULI FLOS
穀精草
Gu Jing Cao / Gu Jing Cao
Buerger Pipewort Flower

Buerger pipewort flower is the dried inflorescence with peduncle of *Eriocaulon buergerianum* Koern. (Fam. Eriocaulaceae).

Description: Heads spheroidal, slightly flattened, 4~5 mm in diameter, grayish-white, containing of 30~40 florets, arrange densely. Involucral scale at the base of heads, arranged densely in numerous layers, discoid, pale yellowish-green, with white and fine powder, the upper margin covered with densely white pubescences. After rubbing the inflorescence, numerous black anthers and yellowish-green, unripe fruits visible. Peduncle slender, 15~18 cm in length, less than 1 mm in diameter, pale yellowish-green, bearing numerous twisted ridges, lustrous, texture pliable, uneasily broken. Odorless; taste, weak.

Microscopic identification:

1. **Transverse section:** Glandular hairs with head cells suboblong or subovate, 1~4 layers of cells, with reticular striations on the surface. Non-glandular hairs long at the apex, wall thickened. Epidermal cells of scapes strip-shaped, wall thin, surface bearing longitudinal cutin striations. Cell walls of fibers thick and slender. Vessels visible.
2. **Powder:** Yellowish-green. Glandular hairs with the head elongated-rounded or strip-shaped, 1~4 layers of cells, with reticular striations on the surface. Non-glandular hairs mostly broken, long at the apex, walls thickened. Epidermal cells of scapes strip-shaped, wall thin, surface bearing longitudinal cutin striations. Stomata subrectangular, subsidiary cells reniform. Fibers with thick and slender walls. Vessels mainly reticulate.

Thin layer chromatographic identification test (General rule 1010.3):

1. Sample solution: Add 1.0 g of powdered sample to 30 mL of ethanol, ultrasonicate for 30 minutes, filter, evaporate the filtrate to dryness, dissolve the residue in 1 mL of ethanol.
2. Reference drug solution: Use l.0 g of the reference drug as the same method described above.
3. Procedure: Use silica gel F_{254} as the coating substance and a solution of toluene and acetone (10:0.6) as the developing solvent. Apply 5 μL of each of the above solutions to the plate. Once the top of the solvent rise to about 5~10 cm from the origin, dry in air. Examine under the ultraviolet light at 365 nm. The spots in the chromatogram obtained from the sample solution correspond in R_f values and color to the spots in the chromatogram obtained from the reference drug solution.

Impurities and other requirements:

1. Loss on drying: Not more than 15.0% under heating at 105℃ for 5 hours (General rule 5008).
2. Total ash: Not more than 6.0% (General rule 5004).
3. Acid-insoluble ash: Not more than 2.0% (General rule 5004).

Storage: Store in a ventilated and dry place.
Usage: Heat-clearing medicinal (Heat-clearing and fire-purging medicinal).
Dosage: 4.5~9 g.

EUCOMMIAE CORTEX
杜仲
Du Jhong / Du Zhong
Eucommia Bark

Eucommia bark is the dried bark of trunk of *Eucommia ulmoides* Oliv. (Fam. Eucommiaceae).
It contains not less than 7.0% of dilute ethanol-soluble extractives and not less than 5.0% of water extractives.

Description: Flat pieces or pieces with two edges slightly curved inwards, 2~7 mm thick. Outer surface pale grayish-brown. Unscraped one with distinct longitudinal wrinkles, fissured and rhombus lenticels, occasionally with lichens spot. Scraped one outer surface pale brown and smooth, inner surface reddish-purples or purplish-brown, smooth. Texture fragile, easily broken, fracture linked up by fine, dense, silvery and elastic rubber threads, generally pulling off above 1 cm. Odor, slight; taste, slightly bitter, gum-like on chewing.

Microscopic identification:

1. **Transverse section:** Rhytidome remained, inner containing several layers of cork tissue, every layer composed of cork cells arranged in order with inner walls extremely thickened and lignified. Phloem composed of 5~7 stone cell bands, each band contains 3~5 layers of stone cells, with some fibers nearby. Phloem rays 2~3 cells wide, obliquing to one side near phelloderm. White resinous masses mostly scattered in phloem. The resinous threads existed in laticiferous cells.
2. **Powder:** Brown. Stone cells numerous, mostly in groups, rectangular, subrounded or irregular, walls thickened, lumina small, pit canals distinct, some lumina contain resinous masses. Cork cells present individually or in groups, polygonal in surface view, walls unevenly thickened; rectangular in lateral view, walls thickened on three sides and thin on one side. Resinous threads stripe-shaped or twisted into masses.

Identification:

1. Take 1.0 g of powdered sample, add 10 mL of chloroform, immerse for 2 hours, filter, evaporate the filtrate to dryness, add 1 mL of ethanol, and an elastic film is produced.

Impurities and other requirements:

1. Loss on drying: Not more than 11.0% under heating at 105℃ for 5 hours (General rule 5008).
2. Total ash: Not more than 9.0% (General rule 5004).
3. Acid-insoluble ash: Not more than 5.0% (General rule 5004).
4. Cadmium (Cd): Not more than 2.0 ppm (General rule 3049, 3050).
5. Lead (Pb): Not more than 30.0 ppm (General rule 3007, 3049, 3050).
6. Mercury (Hg): Not more than 2.0 ppm (General rule 3049).

Assay:

1. Water extractives: Carry out the method for determination of water extractives (General rule 5006).
2. Dilute ethanol extractives: Carry out the method for determination of dilute ethanol-soluble extractives (General rule 5006).

Storage: Store in a ventilated and dry place.
Usage: Tonifying and replenishing medicinal (Yang-assisting medicinal).
Dosage: 6~9 g.

EUPATORII HERBA
佩蘭
Pei Lan / Pei Lan
Fortune Eupatorium Herb

Fortune eupatorium herb is the dried aerial part of *Eupatorium fortunei* Turcz. (Fam. Compositae).
It contains not less than 8.0% of dilute ethanol-soluble extractives and not less than 11.0% of water extractives.

Description: Stems straight, branched less, cylindrical, 30~100 cm in length, 0.2~0.5 cm in diameter, externally yellowish-brown or yellowish-green, with distinct nodes and longitudinal ridges, internodes 3~7 cm in length; texture fragile, fracture whitish, with pith or hollow. Leaves opposite, mostly crumpled and broken, trifid or not divided as whole, segments oblong or oblong-lanceolate, margin serrate, externally greenish-brown or blackish-green. Odor, aromatic; taste, slightly bitter.

Microscopic identification:

1. **Transverse section:**
   (1) Leaf: Anticlinal walls of upper epidermal cells slightly sinuous in surface view, multicellular non-glandular hairs occasionally found, non-glandular hairs on veins relatively long, 7~8 celled, 120~160 μm in length, 16~20 μm in basal diameter. Stomata anomocytic. Anticlinal walls of lower epidermal cells sinuous, with non-glandular hairs more than upper epidermis, usually 3~6 celled, 60~105 μm in length, 14~16 μm in basal diameter, some cells usually contain pale brown contents; stomata numerous, anomocytic.

Thin layer chromatographic identification test (General rule 1010.3):

1. Sample solution: Add 1.0 g of powdered sample to 10 mL of methanol, ultrasonicate for 30 minutes, cool, filter and make up the filtrate to 10 mL.
2. Reference drug solution: Use 1.0 g of the reference drug as the same method described above.
3. Procedure: Use silica gel F_{254} as the coating substance and a solution of petroleum ether (30~60 ℃) and ethyl acetate (19:1) as the developing solvent. Apply 10 μL of each of the above solutions to the plate. Once the top of the solvent rise to about 5~10 cm from the origin, dry in air. Spray with a solution of vanillin in sulfuric acid (Vanillin/H_2SO_4TS), heat until the spots become visible and examine under visible light. The spots in the chromatogram obtained from the sample solution correspond in R_f values and color to the spots in the chromatogram obtained from the reference drug solution.

Impurities and other requirements:

1. Loss on drying: Not more than 15.0% under heating at 105℃ for 5 hours (General rule 5008).
2. Total ash: Not more than 11.0% (General rule 5004).
3. Acid-insoluble ash: Not more than 3.0% (General rule 5004).

Assay:

1. Water extractives: Carry out the method for determination of water extractives (General rule 5006).
2. Dilute ethanol extractives: Carry out the method for determination of dilute ethanol-soluble extractives (General rule 5006).

Storage: Store in a cool and dry place.
Usage: Dampness-resolving with aroma medicinal.
Dosage: 3~9 g.

EURYALES SEMEN
芡實
Cian Shih / Qian Shi
Euryale Seed

Euryale seed is the dried ripe seed of *Euryale ferox* Salisb. (Fam. Nymphaeaceae).

Description: Spheroidal, 6~7 mm in diameter. One end externally white, with a round dented and yellowish-brown scar of hilum, the other end brownish-red, smooth, occasionally peeling with striations. Texture hard and fragile, fracture uneven, white, starchy. Odorless; taste, weak.

Microscopic identification:

1. **Transverse section:** 4~5 layers of reticular sclerenchymatous tissue exist at the outer part of endotesta, unlignified, scattered with small spiral and reticulate vessels, 6~25 μm in diameter; inside showing 3~4 layers of parenchymatous cells, containing aleurone granules. Endosperm composed of suboblong to subpolygonal parenchymatous cells, containing numerous starch granules; compound granules composed of dozens to hundreds components, subrounded, 10~30 μm in diameter; simple granules subrounded, subpolygonal or oblong, 1~3 μm in diameter, without striations, with dotted hilum rare.
2. **Powder:** White. Starch granules mainly compound granules, subspheroidal, some oval, oblong or rounded-polygonal, composed of dozens to hundreds components, 12~29 μm in diameter, up to 31 μm in length, edge smooth, normally unbroken; the components melted after mounted by chloral hydrate TS, leaving grid-shaped traces. After compound granules broken, simple granules or groups shedded; simple granules polygonal or irregular in shape, 1~3 μm in diameter. Perisperm cells mostly broken, complete ones rectangular, long strip-shaped, long-polygonal or irregular in shape, 36~90 μm in diameter, up to 450 μm in length, wall thin, one cell filled with dozens to hundreds subspheroidal compound granules. Pigment cells fallen off, with cell boundaries indistinct, containing orange-yellow, orange-red or reddish-brown contents. Endotesta cells and vessels also present.

Thin layer chromatographic identification test (General rule 1010.3):

1. Sample solution: Add 2.0 g of powdered sample to 30 mL of dichloromethane, ultrasonicate for 15 minutes then filter, evaporate the filtrate to dryness, dissolve the residue in 2 mL of ethyl acetate.
2. Reference drug solution: Use 2.0 g of the reference drug as the same method described above.
3. Procedure: Use silica gel F_{254} as the coating substance and a solution of *n*-hexane and acetone (5:1) as the developing solvent. Apply 10 μL of each of the above solutions to the plate. Once the top of the solvent rise to about 5~10 cm from the origin, dry in air. Spray with a 10% solution of sulfuric acid in ethanol (H_2SO_4/EtOH TS), heat at 105℃ until the spots become visible. The spots in the chromatogram obtained from the sample solution correspond in R_f values and color to the spots in the chromatogram obtained from the reference drug solution.

Impurities and other requirements:

1. Total ash: Not more than 1.0% (General rule 5004).
2. Acid-insoluble ash: Not more than 1.0% (General rule 5004).

Storage: Refrigerate or store in a cool and dry place, and protect from mold and insects.
Usage: Astringent medicinal.
Dosage: 9~15 g.

EVODIAE FRUCTUS
吳茱萸
Wu Jhu Yu / Wu Zhu Yu
Evodia Fruit

Evodia fruit is the dried and almost ripe fruit of *Evodia rutaecarpa* (Juss.) Benth., *Evodia rutaecarpa* (Juss.) Benth. var. *officinalis* (Dode) Huang or *Evodia rutaecarpa* (Juss.) Benth. var. *bodinieri* (Dode) Huang (Fam. Rutaceae).
It contains not less than 15.0% of dilute ethanol-soluble extractives, not less than 10.0% of water extractives and not less than 0.2% of the total amount of evodiamine and rutaecarpine.

Description: Flattened spheroidal or slightly flattened-pentagon spheroidal, 2~5 mm in diameter. Externally dark yellowish-green or greenish-black, with numerous fine depressed oil dots and tiny and fine wrinkles. A pentagon-stellate cleft present at the apex, composed of 5 follicles, 5-toothed persistent calyx, fruit stalk short with yellow tomenta at the base. Texture hard. Transverse section showing 5-locular ovary, each loculus possessing 1 yellowish-brown seed. Odor, strong aromatic; taste, pungent and bitter.

Microscopic identification:

1. **Powder:** Grayish-brown. Mucilage cells subrounded or oblong, 64~120 μm in diameter, occasionally mucilage contents overflowed when the walls broken. Non-glandular hairs 1~9 celled, straight or slightly curved, 62~416 μm in length, 16~48 μm in diameter, walls slightly thickened, smooth, with cuticle striations or warty protrusions, some lumina filled with brownish-red contents. Epidermal cell of pericarp polygonal, mostly containing hesperidin crystals; stomata with 4~6 subsidiary cells. Parenchymatous cells of mesocarp subrounded, also containing hesperidin crystals. Glandular hair heads composed of 7~14 cells or more, 64~96 μm in length, 24~53 μm in diameter, containing yellowish-brown or dark reddish-brown contents; stalk 1~4 celled, the cells connected with head usually containing reddish-brown contents. Clusters of calcium oxalate 16~38 μm in diameter, prisms of calcium oxalate also present. Stone cells subrounded, rectangular or fusiform, 40~64 μm in diameter, walls 8~16 μm thick, pits and pit canals distinct, lumina contain yellow contents. Pollen grains, fibers, vessels and fragments of oil cavities also present.

Thin layer chromatographic identification test (General rule 1010.3):

1. Sample solution: Add 0.4 g of powdered sample to 10 mL of ethanol, stand for 30 minutes, ultrasonicate for 30 minutes, filter and use the filtrate.
2. Reference drug solution: Use 0.4 g of the reference drug as the same method described above.
3. Reference standard solution: Weigh accurately a quantity of rutaecarpine and evodiamine and dissolve in ethanol to produce a solution containing 0.2 mg and 1.5 mg per mL of each.
4. Procedure: Use silica gel F_{254} as the coating substance and a solution of petroleum ether (30~60 ℃), ethyl acetate and triethylamine (7:3:0.1) as the developing solvent. Apply 2 μL of each of the above solutions to the plate. Once the top of the solvent rise to about 5~10 cm from the origin, dry in air. Examine under ultraviolet light at 365 nm. The spots in the chromatogram obtained from the sample solution correspond in R_f values and color to the spots in the chromatogram obtained from the reference drug solution and the reference standard solution.

Impurities and other requirements:

1. Loss on drying: Not more than 13.0% under heating at 105℃ for 5 hours (General rule 5008).
2. Total ash: Not more than 9.5% (General rule 5004).
3. Acid-insoluble ash: Not more than 2.0% (General rule 5004).

Assay:

1. Evodiamine and rutaecarpine:
   (1) Mobile phase: A solution of acetonitrile, water, tetrahydrofuran and acetic acid (51:48:1:0.1). The ratio varies as required.
   (2) Reference standard solution: Place evodiamine and rutaecarpine in a phosphorus pentoxide dryer at 50°C, and depressurize (under 5 mm Hg) for 12 hours. Weigh accurately a quantity of each and dissolve in methanol to produce a solution containing 0.1 mg per mL of each.
   (3) Sample solution: Weigh accurately 130 mg of powdered sample add 80 mL of methanol, heat under reflux for 50 minutes, cool, filter and use the filtrate add methanol to 100 mL.
   (4) Chromatographic system: The liquid chromatography is equipped with an ultraviolet absorption photometer (wavelength: 225 nm) and a column (4~6 mm × 15~25 cm) packed with octadecylsilanized silica gel (5~10 μm in particle diameter). The column temperature is maintained at room temperature. Inject reference standard solution into the liquid chromatography apparatus for five times, and record the peak areas. The relative standard deviation of the peak area of evodiamine and rutaecarpine should not be more than 1.5%.
   (5) Procedure: Inject accurately 10~20 μL of each of the reference standard solution and the sample solution into the liquid chromatography apparatus, and calculate the content.
2. Water extractives: Carry out the method for determination of water extractives (General rule 5006).
3. Dilute ethanol extractives: Carry out the method for determination of dilute ethanol-soluble extractives (General rule 5006).

Storage: Refrigerate or store in a cool and dry place.
Usage: Interior-warming medicinal.
Dosage: 1~4.5 g.
Precaution and warning: Highly hot, used with caution in pregnancy.

FARFARAE FLOS
款冬花
Kuan Dong Hua / Kuan Dong Hua
Coltsfoot Flower

Coltsfoot flower is the dried bud of *Tussilago farfara* L. (Fam. Compositae).
It contains not less than 25.0% of dilute ethanol-soluble extractives and not less than 30.0% of water extractives.

Description: Long clavate, 1.5~3 cm in length, 0.3~1 cm in diameter. The upper part broader and the lower part gradually slender or pedicelled, enclosed by bracts. Bracts externally purplish-red or yellowish-purple, several layers, slightly triangular, inner surface and margin densely covered with white flocky hairs. Show very small ray florets and disc florets after removing bracts, less than 0.3 cm in length, with pappi. Texture light and tenacious, showing white and rubber hairs after ripping. Odor, aromatic; taste, slightly bitter and pungent, cotton like on chewing.

Microscopic identification:

1. **Powder:** Brown, tomentose-shaped. Non-glandular hairs extremely long, 1- to 4-celled, apical cells long, twisted into masses, 5~17 μm in diameter, wall thin. Glandular hairs slightly pestle-like in shape, 104~216 μm in length, 16~52 μm in diameter, the head slightly expanded, about 4- to 6-celled; the stalk multicellular, composed of 2 rows (1 row in lateral view). Pappi composed of several rows of branched hairs, each branch unicellular, the apex gradually acute. Pollen grains subspheroidal, 28~40 μm in diameter, with 3 germinal pores, with spiny protuberance on the surface. Cells in inner walls of pollen sac subrectangular in surface view, with thickened wall into longitudinally strip-shaped. Epidermal cells of bracts in surface view, anticlinal walls thin or slightly moniliform thickened, with sinuous and cutinized striations; epidermal cells of margins tomentose-shaped. Endodermal cells of margins of tubular corolla lobes suboblong, with cutinized striations. Epidermal cells of stigma with outer walls papillary protuberance, some cells differentiated into short tomentose-shaped. Sclerenchymatous cells, secretory cells containing yellow secretions and inulin masses also visible.

Thin layer chromatographic identification test (General rule 1010.3):

1. Sample solution: Add 1.0 g of powdered sample to 10 mL of methanol, heat and shake in the water bath for 5 minutes, cool, filter and use the filtrate.
2. Reference drug solution: Use 1.0 g of the reference drug as the same method described above.
3. Procedure: Use silica gel F_{254} as the coating substance and a solution of *n*-butanol, water and glacial acetic acid (7:2:1) as the developing solvent. Apply 5 μL of each of the above solutions to the plate. Once the top of the solvent rise to about 5~10 cm from the origin, dry in air. Examine under the ultraviolet light at 254 nm. The spots in the chromatogram obtained from the sample solution correspond in R_f values and color to the spots in the chromatogram obtained from the reference drug solution.

Impurities and other requirements:
1. Total ash: Not more than 12.0% (General rule 5004).
2. Acid-insoluble ash: Not more than 6.0% (General rule 5004).

Assay:
1. Water extractives: Carry out the method for determination of water extractives (General rule 5006).
2. Dilute ethanol extractives: Carry out the method for determination of dilute ethanol-soluble extractives (General rule 5006).

Storage: Refrigerate or store in a cool and dry place, and protect from insects.
Usage: Phlegm-dispelling medicinal (Cough-suppressing and panting-calming medicinal).
Dosage: 6~12 g.

FOENICULI FRUCTUS
小茴香
Siao Huei Siang / Xiao Hui Xiang
Fennel Fruit

Fennel fruit is the dried ripe fruit of *Foeniculum vulgare* Mill. (Fam. Umbelliferae).
It contains not less than 12.0% of dilute ethanol-soluble extractives, not less than 10.0% of water extractives and nor less than 1.4% (v/w) of volatile oil.

Description: Cremocarp, slender cylindrical, some slightly curved, 3~8 mm in length, 1.5~3 mm in diameter. Externally yellowish-green or grayish-brown, apex remained with protuberant stylopodium, base occasionally with slender fruit stalk. Mericarp oval, ribs 5, commissural surface flattened, with longitudinal striations, occasionally attached with white line of thecaphore. Odor, characteristically aromatic; taste, slightly sweet and pungent.

Microscopic identification:
1. **Transverse section:** Exocarp composed of 1 layer of flattened cells, covered with cuticles. Mesocarp composed of several layers of parenchymatous cells, 6 vittae, with oblong or semi-rounded vita between every 2 ribs, and 2 situated in the commissural, surrounded by numerous reddish-brown and flattened secretory cells. Vascular bundles exists in the middle of ribs, consisted of 2 collateral vascular bundles and fiber bundles, surrounded by lignified and large reticulate cells; xylem consists of some small vessels; phloem exists on the both side of vessels. Endosperm composed of 1 layer of flattened thin-walled cells varying in length. The testa cells compressed and elongated, with several layers of cells in the middle of commissural, containing brown contents, consisted of small rhaphe vascular bundles. Endosperm cells polygonal, filled with numerous aleurone grains, and embedding clusters of calcium oxalate and some fatty oil.
2. **Powder:** Yellowish-brown. Epidermal cells of exocarp subpolygonal or subsquare in surface view, with slightly thickened walls. Stomata anomocytic, with 4 subsidiary cells. Reticulate cells of mesocarp subrectangular of sub-oblong, with thickened and slightly lignified walls, pits reticulate ovate or oblong. Fragments of vittae yellowish-brown or dark reddish-brown, complete ones up to 250 μm wide, polygonal secretory cells scars visible. Endocarp inlaid layer cells slender in surface view, with thin walls, usually several cells of a group irregularly inlaid along their long axes. Endosperm cells, clusters of calcium oxalate and xylem parenchymatous cells also present.

Thin layer chromatographic identification test (General rule 1010.3):
1. Sample solution: Add 0.5 g of powdered sample to 10 mL of *n*-hexane, shake for several minutes, filter and use the filtrate.
2. Reference drug solution: Use 0.5 g of the reference drug as the same method described above.
3. Procedure: Use silica gel F_{254} as the coating substance and a solution of *n*-hexane and ethyl acetate (20:1) as the developing solvent. Apply 5 μL of each of the above solutions to the plate. Once the top of the solvent rise to about 5~10 cm from the origin, dry in air. Examine under ultraviolet light at 254 nm. The spots in the chromatogram obtained from the sample solution correspond in R_f values and color to the spots in the chromatogram obtained from the reference drug solution.

Impurities and other requirements:
1. Loss on drying: Not more than 13.0% under heating at 105℃ for 5 hours (General rule 5008).
2. Total ash: Not more than 10.0% (General rule 5004).
3. Acid-insoluble ash: Not more than 2.0% (General rule 5004).
4. Aflatoxins: Not more than 15.0 ppb (General rule 3053).

Assay:
1. Water extractives: Carry out the method for determination of water extractives (General rule 5006).
2. Dilute ethanol extractives: Carry out the method for determination of dilute ethanol-soluble extractives (General rule 5006).
3. Volatile oil: Carry out the method for determination of volatile oil (General rule 5007).

Storage: Store in a cool and dry place.
Usage: Interior-warming medicinal.
Dosage: 3~6 g.

FORSYTHIAE FRUCTUS
連翹
Lian Ciao / Lian Qiao
Forsythia Fruit

Forsythia fruit is the dried fruit of *Forsythia suspensa* (Thunb.) Vahl (Fam. Oleaceae), collected when nearly ripe, commonly known as "Qing Qiao"; collected when fully ripe, commonly known as "Lao Qiao".
It contains not less than 9.0% of dilute ethanol-soluble extractives, not less than 5.0% of water extractives and not less than 0.015% of forsythin.

Description: Elongated ovate to ovate, 1.5~2.5 cm in length, 0.5~1.3 cm in diameter. Externally with irregular longitudinal wrinkles and numerous protuberant small maculates, with a distinct longitudinal furrow on each of both surfaces. Apex acute, base with a small fruit stalk or not. "Qing Qiao" mostly indehiscent, externally greenish-brown, with less protuberant small and grayish-white maculates; texture hard; seeds numerous, yellowish-green, slender, winged at one side. "Lao Qiao" dehiscent from apex or dehiscent to two segments, outer surface yellowish-brown or reddish-brown, inner surface mostly pale yellowish-brown, smooth, with a longitudinal septum; texture fragile; seeds brown, mostly fallen off; odor, slightly aromatic; taste, bitter.

Microscopic identification:

1. **Transverse section:**
   (1) Pericarp: Exocarp composed of 1 layer of epidermal cells, outer and lateral walls thickened, covered with cuticle. Mesocarp composed of vascular bundles scattered in parenchyma at the outside, and many layers of stone cells at the inner side, long strip-shaped, subrounded or elongated-rounded, walls varying in thickness, mostly tangentially parqueted and extended to the cells of the septum; endocarp composed of 1 layer of parenchymatous cells.
2. **Powder:** Pale yellowish-brown. Endocarp fibers mostly in bundles, some cross-overlapping, short fusiform or irregular in shape, margins uneven or lumpy, 80~224 μm in length, 24~32 μm in diameter, wall 8~18 μm thick, lignified, pits rare, pit canals fine. Stone cells subpolygonal, subrectangular, rounded-triangular, subrounded or subsquare, 36~48 μm in diameter, wall 8~22 μm thick, some with walls relatively thin at one side, pits with different spacing, pit canals faintly visible. Epidermal cells of pericarp subrectangular in sectional view, 24~30 μm in diameter, outer walls cutinized thickness, 8~17 μm thick, lateral walls also thickened, occasionally into hemispheroidal; subsquare or subpolygonal in surface view, anticlinal walls thickened and slightly curved, outer periclinal walls with irregular or reticulate striations on the surface. Mesocarp cells, vessels and tracheids also visible.

Thin layer chromatographic identification test (General rule 1010.3):

1. Sample solution: Add 1.0 g of powdered sample to 10 mL of methanol, ultrasonicate for 30 minutes, filter and evaporate the filtrate to dryness, dissolve the residue in 1 mL of methanol.
2. Reference drug solution: Use 1.0 g of the reference drug as the same method described above.
3. Reference standard solution: Weigh accurately a quantity of forsythin and dissolve in methanol to produce a solution containing 1.0 mg per mL.
4. Procedure: Use silica gel F_{254} as the coating substance and a solution of dichloromethane and methanol (4:1) as the developing solvent. Apply 5 μL of each of the sample solution and reference drug solution and 2 μL of the reference standard solution to the plate. Once the top of the solvent rise to about 5~10 cm from the origin, dry in air. Spray with a solution of sulfuric acid in ethanol (H_2SO_4/EtOH TS) and heat at 105℃ for 3 minutes until the spots become visible. Examine under the visible light. The spots in the chromatogram obtained from the sample solution correspond in R_f values and color to the spots in the chromatogram obtained with the reference drug solution and the reference standard solution.

Impurities and other requirements:

1. Foreign matter: Not more than 3.0% of Qingqiao, not more than 9.0% of Laoqiao (General rule 5003).
2. Loss on drying: Not more than 14.0% under heating at 105℃ for 5 hours (General rule 5008).
3. Total ash: Not more than 6.0% (General rule 5004).
4. Acid-insoluble ash: Not more than 2.0% (General rule 5004).

Assay:

1. Forsythin:
   (1) Mobile phase: A solution of acetonitrile and water (24:76). The ratio varies as required.
   (2) Reference standard solution: Weigh accurately a quantity of forsythin and dissolve in 50% methanol to produce a solution containing 0.2 mg per mL.
   (3) Sample solution: Weigh accurately 0.25 g of the powdered sample, transfer to a 50 mL centrifuge tube, accurately add 10 mL of 50% methanol, ultrasonicate for 30 minutes, centrifuge for 10 minutes, transfer the supernatant to a 25-mL volumetric flask, elute again as described above, wash the residue with a small quantity of 50% methanol, combine the filtrate, add 50% methanol to volume, mix well, filter and use the filtrate.
   (4) Chromatographic system: The liquid chromatography is equipped with an ultraviolet absorption photometer

(wavelength: 202 nm) and a column packed with octadecylsilanized silica gel. The number of theoretical plates of the peak of forsythin should not be less than 3,000.

(5) Procedure: Inject accurately 10 μL of each of the reference standard solution and the sample solution into the liquid chromatography apparatus, and calculate the content.

2. Water extractives: Carry out the method for determination of water extractives (General rule 5006).
3. Dilute ethanol extractives: Carry out the method for determination of dilute ethanol-soluble extractives (General rule 5006).

Storage: Store in a dry place.
Usage: Heat-clearing medicinal (Heat-clearing and detoxiating medicinal).
Dosage: 6~15 g.

FRAXINI CORTEX
秦皮
Cin Pi / Qin Pi
Ash Bark

Ash bark is the dried bark of branch or trunk of *Fraxinus rhynchophylla* Hance, *Fraxinus chinensis* Roxb., *Fraxinus szaboana* Lingelsh. or *Fraxinus stylosa* Lingelsh. (Fam. Oleaceae).
It contains not less than 6.0% of dilute ethanol-soluble extractives, not less than 4.0% of water extractives and not less than 1.0% of the total amount of aesculin and aesculetin.

Description:
1. Bark of branch: Quilled or channeled, 10~60 cm in length, 1.5~3 mm thick. Outer surface grayish-white, grayish-brown to blackish-brown, or alternated in patches, even or slightly rough, with grayish-white and rounded dotted lenticels, and fine oblique wrinkles, some with branch scars; inner surface yellowish-white or brown, smooth. Texture hard and fragile, fracture split, easily exfoliated, yellowish-white. Odor, slight; taste, bitter.
2. Bark of trunk: Slat pieces, 3~6 mm thick. Texture hard, fracture relatively fibrous. Odor, slight; taste, bitter.

Microscopic identification:
1. **Transverse section:** Cork composed of 5~10 rows of cells. Phelloderm composed of several rows of polygonal collenchymatous cells. Cortex scattered with fiber bundles and stone cell groups, stone cells branched, with walls thickened. Pericycle shows the ringed-band composed of stone cells and fiber bundles, occasionally interrupted. Phloem rays 1~3 rows of cells wide; fiber bundles and a few stone cells arranged into layers, penetrated with rays in "#" shape. Rays and phloem parenchymatous cells filled with sandy crystals of calcium oxalate, mostly distributed in ray cells.
2. **Powder:** Pale yellowish-white. Fibers straight or slightly curved, the margins sinuous or uneven, 15~40 μm in diameter, walls extremely thickened and lignified, pits indistinct, lumen linear, occasionally with irregularly oblique striations on the surface. Stone cells subrounded, subrectangular or subfusiform, irregularly branched, 24~90 μm in diameter and up to about 150~282 μm in length, walls extremely thickened, pit canals distinct. Rays 1~2 rows of cells wide, lumen filled with sandy crystals of calcium oxalate, in fine fusiform or granular forms, about 3 μm in length. Cork cells polygonal in surface view, wall slightly lignified, with sparse pits. Starch granules rare.

Thin layer chromatographic identification test (General rule 1010.3):
1. Sample solution: Add 1.0 g of powdered sample to 10 mL of methanol, ultrasonicate for 30 minutes, filter and use the filtrate.
2. Reference drug solution: Use 1.0 g of the reference drug as the same method described above.
3. Procedure: Use silica gel F_{254} as the coating substance and a solution of toluene, ethyl acetate, formic acid and ethanol (3:4:1:2) as the developing solvent. Apply 10 μL of each of the above solutions to the plate. Once the top of the solvent rise to about 5~10 cm from the origin, dry in air. Examine under the ultraviolet light at 365 nm. The spots in the chromatogram obtained from the sample solution correspond in R_f values and color to the spots in the chromatogram obtained from the reference drug solution.

Impurities and other requirements:
1. Loss on drying: Not more than 7.0% under heating at 105℃ for 5 hours (General rule 5008).
2. Total ash: Not more than 8.0% (General rule 5004).
3. Acid-insoluble ash: Not more than 2.0% (General rule 5004).

Assay:
1. Aesculin and aesculetin:
   (1) Mobile phase: A solution of acetonitrile and 0.1% phosphoric acid (8:92). The ratio varies as required.
   (2) Reference standard solution: Weigh accurately a quantity of aesculin and aesculetin and dissolve in methanol to produce a solution containing 0.1 mg and 60 μg per mL of each.
   (3) Sample solution: Weigh accurately 0.5 g of powdered sample, transfer to a conical flask with stopper, add accurately 50 mL of methanol, stopper tightly and weigh, heat

under reflux for 1 hour, cool, weigh again, replenish the loss of the weight with methanol, mix well, filter and use the successive filtrate.

(4) Chromatographic system: The liquid chromatography is equipped with an ultraviolet absorption photometer (wavelength: 334 nm) and a column packed with octadecylsilanized silica gel. The number of theoretical plates of the peak of aesculetin should not be less than 5,000.

(5) Procedure: Inject accurately 10 μL of each of the reference standard solution and the sample solution into the liquid chromatography apparatus, and calculate the content.

2. Water extractives: Carry out the method for determination of water extractives (General rule 5006).
3. Dilute ethanol extractives: Carry out the method for determination of dilute ethanol-soluble extractives (General rule 5006).

Storage: Store in a ventilated and dry place.
Usage: Heat-clearing and detoxicating medicinal.
Dosage: 6~12 g.

FRITILLARIAE THUNBERGII BULBUS
浙貝母
Jhe Bei Mu / Zhe Bei Mu
Thunberg Fritillary Bulb

Thunberg fritillary bulb is the dried bulb of *Fritillaria thunbergii* Miq. (Fam. Liliaceae). The drug is washed clean, and classified according to its size. The smaller one with the central bud is commonly known as "Zhu Bei"; the larger one without the central bud is commonly known as "Da Bei"; or classify according to its size, removed the central bud, cut into thick slice while fresh, washed clean, dried, commonly known as "Zhe Bei Pian".
It contains not less than 5.0% of dilute ethanol-soluble extractives, not less than 5.0% of water extractives and not less than 0.080% of the total amount of peimine and peiminine.

Description:
1. Zhu Bei: Whole bulb, oblate, 1~2.5 cm in diameter, 1~1.5 cm in height. Externally whitish, the outer scale leaves 2, plump and fleshy, slightly reniform, holding together, containing 2~3 small scale leaves and dried crumpled stem remains. Texture fragile and compact, easily broken, fracture white, starchy. Odor, slight; taste, bitter.
2. Da Bei: Outer single scale leaf of bulb, one side concave, the other side convex, dumpling-shaped, 2~4 cm in diameter, 1~2.5 cm in height, 0.6~1.5 cm thick. Externally whitish to pale yellowish-white, covered with white powder. Texture hard and fragile, easily broken, fracture white, starchy. Odor, slight; taste, slightly bitter.
3. Zhe Bei Pian: Slices cut from the outer single scale leaf of bulb, elliptical or subrounded, 1~2 cm in diameter, surface of edge pale yellow, cut surface even, powdery-white. Texture hard and fragile, easily broken, fracture powdery-white, starchy. Odor, slight; taste, slightly bitter.

Microscopic identification:
1. **Transverse section:** Epidermis with cells subrectangular, covered with thickened cuticle, stomata found occasionally. Mesophyll composed of 30~40 layers of parenchymatous cells, filled with starch granules, fine prisms of calcium oxalate occasionally found; vascular bundles of leaf view in closed collateral type, several vessels scattered in xylem; phloem composed of over 10 cells.
2. **Powder:** Off-white. Starch granules mostly simple, rarely compound or semi-compound. Simple granules mostly ovate or oblong, 6~56 μm in diameter, hilum mostly pointed, cleft-shaped, V-shaped or U-shaped in the narrowed end, larger starch granules with eccentric striations. Epidermal cells subpolygonal or rectangular, anticlinal walls moniliform thickened, cuticle protuberant inwards and forming cuticle cork, rough granular-shaped. Stomata flattened-rounded, with 4~5 subsidiary cells; epidermal cells scattered with fine crystals of calcium oxalate, mostly fine-square, fusiform or thin bacilliform-shaped. Vessels fine, mostly spiral, up to about 18 μm in diameter.

Thin layer chromatographic identification test (General rule 1010.3):
1. Sample solution: Add 5.0 g of powdered sample, transfer to a 50-mL conical flask, add 2 mL of 25% ammonia solution and 20 mL of ethyl acetate, ultrasonicate for 30 minutes, filter, transfer the filtrate to a 100-mL round-bottom flask, evaporate to dryness with a rotary evaporator, and dissolve the residue in 1 mL of ethyl acetate.
2. Reference drug solution: Use 5.0 g of the reference drug as the same method described above.
3. Reference standard solution: Weigh accurately a quantity of peimine and peiminine and dissolve in ethyl acetate to produce a solution containing 2.0 mg per mL of each.
4. Procedure: Use silica gel F_{254} as the coating substance and a solution of ethyl acetate, methanol and ammonia solution (17:2:1) as the developing solvent. Apply 5 μL of the sample solution and reference drug solution and 2 μL of the reference standard solution to the plate. Once the top of the solvent rise to about 5~10 cm from the origin, dry in air. Spray with modified Dragendorff's reagent, heat at 110℃ until the spots become visible, and examine under visible light. The spots in the chromatogram obtained from the sample solution

correspond in R_f values and color to the spots in the chromatogram obtained from the reference drug solution and the reference standard solution.

Impurities and other requirements:
1. Total ash: Not more than 7.0% (General rule 5004).
2. Acid-insoluble ash: Not more than 2.0% (General rule 5004).
3. Total heavy metals: Not more than 10.0 ppm (General rule 3005).
4. Arsenic (As): Not more than 5.0 ppm (General rule 3006, 3049, 3050).

Assay:
1. Peimine and Peiminine:
   (1) Mobile phase: A solution of acetonitrile, water and diethylamine (70:30:0.03). The ratio varies as required.
   (2) Reference standard solution: Weigh accurately a quantity of peimine and peiminine and dissolve in methanol to produce a solution containing 0.2 mg and 0.15 mg per mL of each.
   (3) Sample solution: Weigh accurately 2.0 g of powdered sample, transfer to a flask, add 4 mL of concentrated ammonia solution, and macerate for 1 hour. Accurately add 40 mL of a solution of chloroform and methanol (4:1), weigh, heat at 80℃ under reflux for 2 hours, cool and weigh again, replenish the loss of solvent with the above mixture and filter. Measure accurately 10 mL of the successive filtrate and evaporate to dryness. Dissolve the residue in methanol, transfer to a 2-mL volumetric flask, add methanol to volume and mix well.
   (4) Chromatographic system: It is equipped with an evaporative light-scattering detector (ELSD) and a column packed with octadecylsilanized silica gel. The number of theoretical plates of the peak of peimine should not be less than 2,000.
   (5) Procedure: Inject accurately 10 μL of peimine, 20 μL of peiminine and 5~15 μL of the sample solution into the apparatus, and use a calibration equation of logarithm alteration of two external standards calculate the content.
2. Water extractives: Carry out the method for determination of water extractives (General rule 5006).
3. Dilute ethanol extractives: Carry out the method for determination of dilute ethanol-soluble extractives (General rule 5006).

Storage: Refrigerate or store in a cool and dry place, and protect from insects.
Usage: Phlegm-dispelling medicinal (Heat-clearing and phlegm-resolving medicinal).
Dosage: 4.5~10 g.

GALLI GIGERIAE ENDOTHELIUM CORNEUM
雞內金
Ji Nei Jin / Ji Nei Jin
Chicken's Gizzard-membrane

Chicken's gizzard-membrane is the dried inner wall of the gizzard of *Gallus gallus domesticus* Brisson (Fam. Phasianidae).

Description: Irregular, shrunken, capsule-shaped slices, 3~6 cm in length as whole, about 3 cm in width, about 0.6 mm thick. Externally yellow or yellowish-brown, thin and slightly translucent, with numerous protuberant ridge-shaped wrinkles. Texture light and fragile, easily broken, fracture horny, lustrous. Odor, slightly stinking; taste, weak and slightly bitter.

Microscopic identification:
1. **Powder:** Fragments of gizzard irregular flaky, varying in size, translucent or slightly pale yellow, the margin irregular, with shrunken and twisted striations on the surface. Sandy granules numerous, irregular polyhedrons, three-dimensional and translucent, with distinct angles.

Impurities and other requirements:
1. Loss on drying: Not more than 15.0% under heating at 105℃ for 5 hours (General rule 5008).
2. Total ash: Not more than 2.0% (General rule 5004).
3. Acid-insoluble ash: Not more than 2.0% (General rule 5004).

Storage: Store in a ventilated and dry place, and protect from insects and crush.
Usage: Disgestant medicinal.
Dosage: 3~10 g.

GARDENIAE FRUCTUS
梔子
Jhih Zih / Zhi Zi
Capejasmine Fruit

Capejasmine fruit is the dried ripe fruit of *Gardenia jasminoides* Ellis (Fam. Rubiaceae).
It contains not less than 12.0% of dilute ethanol-soluble extractives, not less than 15.0% of water extractives and not less than 1.8% of geniposide.

Description: Elongated ovate or ellipsoid, 2~4.5 cm in length, 0.8~2 cm in diameter. The outer surface deep red or reddish-yellow, with 5~8 longitudinal winged ribs. Apex bearing remains of sepals, base somewhat tapering and remained with a fruit stalk. Pericarp thin and fragile, the inner surface bright yellow, lustrous, with 2~3 protuberant false septa. Seeds numerous, flattened-ovate,

aggregated into a mass, reddish-brown, with fine and dense warts on the surface. Immersed in water makes water dyed bright yellow. Odor, slight; taste, slightly sour and bitter.

Microscopic identification:

1. **Transverse section:**
   (1) Pericarp: Rounded, rib obviously protuberant. Exocarp composed of 1 layer of rectangular cells, outer wall thickened and covered with cuticle. 2~4 layers of collenchymatous cells located outside mesocarp; large elongated-rounded parenchymatous cells located inside mesocarp, containing yellow pigments, a few relatively small cells contain clusters of calcium oxalate. Collateral vascular bundles scattered sparsely, relatively large ones surrounded by lignified fiber bundles, inlaid with stone cells. Endocarp composed of 2~3 layers of stone cells, subsquare, rectangular or polygonal, wall thick, pit canals distinct, some lumens contain prisms of calcium oxalate, cluster crystal-containing parenchymatous cells occasionally inlaid.
   (2) Seed: Flatten-rounded, one side slightly protuberant. Testa composed of 1 layer of subsquare stone cells, inner and lateral walls extremely thickened, lumen distinct, containing brownish-red contents and yellow pigments; endotesta composed of fallen off and flatten parenchymatous cells. Endosperm cells polygonal, 2 flatten cotyledons exist in the center, cells filled with aleurone grains.
2. **Powder:** Reddish-brown. Stone cells of pericarp subrectangular; pericarp fibers slender, fusiform, about 10 μm in diameter, up to about 110 μm in length, usually arranged criss-cross or inlaid obliquely. Crystal-containing stone cells subrounded or polygonal, 17~31 μm in diameter, wall thick, lumen containing prisms of calcium oxalate, about 8 μm in diameter. Stone cells of testa yellow or pale brown, elongated-polygonal, rectangular or irregular, 60~112 μm in diameter, up to 230 μm in length, wall thick, pits extremely large, lumen brownish-red. Clusters of calcium oxalate 19~34 μm in diameter.

Thin layer chromatographic identification test (General rule 1010.3):

1. Sample solution: Add 1.0 g of powdered sample to 20 mL of methanol, heat and shake in the water bath for 30 minutes, cool, filter and use the filtrate.
2. Reference drug solution: Use 1.0 g of the reference drug as the same method described above.
3. Reference standard solution: Weigh accurately 1.0 mg of geniposide and dissolve in 1 mL of methanol to produce a solution containing 1.0 mg per mL.
4. Procedure: Use silica gel F_{254} as the coating substance and a solution of ethyl acetate and methanol (3:1) as the developing solvent. Apply 5 μL of each of the above solutions to the plate. Once the top of the solvent rise to about 5~10 cm from the origin, dry in air. Spray with a solution of vanillin in sulfuric acid (Vanillin/H_2SO_4 TS), heat at 105℃ for 10 minutes, and examine under the visible light. The purple spots in the chromatogram obtained from the sample solution correspond in R_f values and color to the spots in the chromatogram obtained with the reference drug solution and the reference standard solution.

Impurities and other requirements:

1. Loss on drying: Not more than 8.5% under heating at 105℃ for 5 hours (General rule 5008).
2. Total ash: Not more than 8.0% (General rule 5004).
3. Acid-insoluble ash: Not more than 3.0% (General rule 5004).

Assay:

1. Geniposide:
   (1) Mobile phase: A solution of acetonitrile and water (15:85). The ratio varies as required.
   (2) Reference standard solution: Weigh accurately a quantity of geniposide and dissolve in methanol to produce a solution containing 30 μg per mL.
   (3) Sample solution: Weigh accurately 0.1 g of the powdered sample, transfer to a conical flask with stopper, and accurately add 25 mL of methanol, ultrasonicate for 20 minutes, weigh again, replenish the loss of weight with methanol, mix well and filter. Weigh accurately 10 mL of the filtrate, transfer the solution to 25-mL volumetric flask, add methanol to volume, and mix well.
   (4) Chromatographic system: The liquid chromatography is equipped with an ultraviolet absorption photometer (wavelength: 238 nm) and a column packed with octadecylsilanized silica gel. The number of theoretical plates of the peak of geniposide should not be less than 1,500.
   (5) Procedure: Inject accurately 10 μL of each of the reference standard solution and the sample solution into the liquid chromatography apparatus, and calculate the content.
2. Water extractives: Carry out the method for determination of water extractives (General rule 5006).
3. Dilute ethanol extractives: Carry out the method for determination of dilute ethanol-soluble extractives (General rule 5006).

Storage: Store in a ventilated and dry place, and protect from mold.

Usage: Heat-clearing medicinal (Heat-clearing and fire-purging medicinal).

Dosage: 6~9 g.

GASTRODIAE RHIZOMA
天麻
Tian Ma / Tian Ma
Gastrodia Tuber

Gastrodia tuber is the dried tuber of *Gastrodia elata* Bl. (Fam. Orchidaceae).
It contains not less than 14.0% of dilute ethanol-soluble extractives, not less than 18.0% of water extractives and not less than 0.20% of gastrodin.

Description: Oblong, compressed shrunken and slightly curved, 5~13 cm in length, 2~6 cm in width, 1~3 cm thick. One side with reddish-brown dried buds, commonly known as "Ying Ge Zuei" or "Hong Xiao Ban", or remained with stem base; other side with a rounded scar after fallen off from the stem. Bark peeling or partial residual, externally yellowish-white or pale yellowish-brown, with annulate rings, dotted scars, membranous scale leaves and longitudinal wrinkles. Texture hard, translucent, uneasily broken, fracture relatively even, horny. Odor, special; taste, sweet and slightly pungent. Texture hard and compact, with a "Ying Ge Zuei" (similar to the beak of parrot), fracture lustrous, solid in the center as better quality named "Dung Ma"; texture light and loose, remained with stem base, fracture dull, hollow in the center as lower quality named "Chuen Ma".

Microscopic identification:

1. **Transverse section:** Occasionally remained with pale brown epidermis. Cortex cells are elongated tangentially, 1 to several layers of walls adjacent to hypodermis slightly thickened, pits sparse. Vascular bundles scattered in stele, amphicribral or collateral; vessels arranged in 2 to several, polygonal in shape. Parenchymatous cells contain polysaccharide masses, result in dark brown or light brownish-purple color against adding of iodine solution; occasionally containing raphides of calcium oxalate.
2. **Powder:** Yellowish-white. Sclerenchyma cells polygonal or long-polygonal, 70~250 μm in diameter, pits distinct. Raphides of calcium oxalate scattered or in bundles, 25~93 μm long. Spiral, reticulate and annular vessels, 8~33 μm in diameter. Parenchymatous cells contain mucilage contents and granules; the granules ovate or oblong in shape, showing colorless when examined under a polarized microscope, some of the granules aggregated in groups, brown or pale brownish-purple color present when added iodine solution.

Thin layer chromatographic identification test (General rule 1010.3):

1. Sample solution: Add 5.0 g of powdered sample to 30 mL of methanol, ultrasonicate for 3 hours, cool, filter and use the filtrate.
2. Reference drug solution: Use 5.0 g of the reference drug as the same method described above.
3. Reference standard solution: Weigh accurately 1.0 mg of gastrodin and dissolve in 1 mL of methanol to produce a solution containing 1.0 mg per mL.
4. Procedure: Use silica gel F_{254} as the coating substance and a solution of *n*-butanol, water and glacial acetic acid (7:2:1) as the developing solvent. Apply 5 μL of each of the above solutions to the plate. Once the top of the solvent rise to about 5~10 cm from the origin, dry in air. Spray with a solution of *p*-anisaldehyde in sulfuric acid (*p*-Anisaldehyde/H_2SO_4 TS) and heat at 105℃. Examine under visible light. The spots in the chromatogram obtained from the sample solution correspond in R_f values and color to the spots in the chromatogram obtained from the reference drug solution and the reference standard solution.

Impurities and other requirements:

1. Total ash: Not more than 4.0% (General rule 5004).
2. Acid-insoluble ash: Not more than 0.5% (General rule 5004).
3. Total heavy metals: Not more than 10.0 ppm (General rule 3005).
4. Arsenic (As): Not more than 5.0 ppm (General rule 3006, 3049, 3050).

Assay:

1. Gastrodin:
   (1) Mobile phase: A solution of acetonitrile and 0.05% phosphoric acid (3:97). The ratio varies as required.
   (2) Reference standard solution: Weigh accurately a quantity of gastrodin and dissolve in mobile phase to produce a solution containing 50 μg per mL.
   (3) Sample solution: Weigh accurately 2.0 g of powdered sample, transfer to a conical flask with stopper, add accurately 50 mL of dilute ethanol, weigh, heat under reflux for 3 hours, cool, weigh again, replenish the loss of the weight with dilute ethanol, mix well, filter, and use the successive filtrate. Evaporate accurately 10 mL of the successive filtrate to dryness. Dissolve the residue in a solution of acetonitrile and water (3:97), transfer to a 25-mL volumetric flask, add a solution of acetonitrile and water (3:97) to volume, mix well, filter, and use the successive filtrate.
   (4) Chromatographic system: The liquid chromatography is equipped with an ultraviolet absorption photometer (wavelength: 220 nm) and a column packed

with octadecylsilanized silica gel. The number of theoretical plates of the peak of gastrodin should not be less than 5,000.

(5) Procedure: Inject accurately 10 μL of the reference standard solution and 5~10 μL of the sample solution into the liquid chromatography apparatus, and calculate the content.

2. Water extractives: Carry out the method for determination of water extractives (General rule 5006).
3. Dilute ethanol extractives: Carry out the method for determination of dilute ethanol-soluble extractives (General rule 5006).

Storage: Refrigerate or store in a cool and dry place, and protect from mold.
Usage: Liver-pacifying and wind-extinguishing medicinal.
Dosage: 3~10 g.

GECKO
蛤蚧
Ge Jie / Ge Jie
Tokay

Tokay is the dried and eviscerated body of *Gekko gecko* L. (Fam. Geckonidae).
It contains not less than 9.0% of dilute ethanol-soluble extractives and not less than 10.0% of water extractives.

Description: Flattened, fixed on bamboo. Head, neck and trunk 10~15 cm in length; tail 8~12 cm in length; abdomen 6~10 cm in width. Head prolate, slightly triangular, two eyes deeply sunken into holes. Tiny teeth present in the mouth at the margin of the jaw. Dorsum sliver-gray or grayish-black scattered with brown or grayish-green spots. Vertebrae and ribs of both sides protuberant. Four limbs all containing 5 digits, bearing suckers at the base. Tail narrow and strong, the joints visible, with silver-gray circular bands. Whole body densely covered with subround or polygonal tiny scales. Odor, stinking, taste, slightly salty.

Microscopic identification:

1. **Powder:** Scales colorless or pale grayish-green. Epidermal cells with semicircular or subrounded protuberance, tile-like arranged, 10~30 μm in diameter. Fragments of skin pale yellow, cell boundaries indistinct, scattered with brownish-black granules, usually aggregated into stellate shaped.

Thin layer chromatographic identification test (General rule 1010.3):

1. Reference drug:
   (1) Sample solution: Add 0.4 g of powdered sample to 5 mL of 70% ethanol, ultrasonicate for 30 minutes, filter and use the filtrate.
   (2) Reference drug solution: Use 0.4 g of the reference drug as the same method described above.
   (3) Procedure: Use silica gel plate with sodium carboxymethyl cellulose as the coating substance and a solution of *n*-butanol, glacial acetic acid and water (3:1:1) as the developing solvent. Apply 5~8 μL of each of the above solutions to the plate. Once the top of the solvent rise to about 15 cm from the origin, dry in air. Spray with a solution ninhydrin (Ninhydrin TS) and heat at 105℃ until the spots become visible. The spots in the chromatogram obtained from the sample solution correspond in R_f values and color to the spots in the chromatogram obtained from the reference drug solution.

Spectrophotometry (General rule 1008):

1. Take 0.2 g of the powdered sample, add 20 mL of ethanol, stand for 12 hours, filter, dilute the filtrate with ethanol to produce a solution containing 1.0 mg per mL as the sample solution, and measure the max absorption appear at 321 ± 2, 287 ± 2, 275 ± 2, 265 ± 2 and 244 ± 2 nm.

Impurities and other requirements:

1. Loss on drying: Not more than 12.0% under heating at 105℃ for 5 hours (General rule 5008).
2. Total ash: Not more than 20.0% (General rule 5004).
3. Acid-insoluble ash: Not more than 2.0% (General rule 5004).

Assay:

1. Water extractives: Carry out the method for determination of water extractives (General rule 5006).
2. Dilute ethanol extractives: Carry out the method for determination of dilute ethanol-soluble extractives (General rule 5006).

Storage: Store in a cool and dry place, and protect from moisture.
Usage: Tonifying and replenishing medicinal (Yang-tonifying medicinal).
Dosage: 3~6 g.

GENTIANAE MACROPHYLLAE RADIX
秦艽
Cin Jiao / Qin Jiao
Largeleaf Gentian Root

Largeleaf gentian root is the dried root of *Gentiana macrophylla* Pall., *Gentiana straminea* Maxim., *Gentiana crassicaulis* Duthie ex Burk. or *Gentiana dahurica* Fisch. (Fam. Gentianaceae).
It contains not less than 29.0% of dilute ethanol-soluble extractives, not less than 26.0% of water extractives and

not less than 2.5% of the total amount of gentiopicrin and loganic acid.

Description:

1. Root of *Gentiana macrophylla*: Subconical, the upper part thick and the lower part thin, twisted, 7~30 cm in length, 1~3 cm in diameter. Externally grayish-yellow or brownish-yellow, with longitudinal or twisted wrinkles. Apex of main root swollen, composed of numerous rhizome, remained with stem bases adhered with fibrous leave. Middle of main root with twisted wrinkles and scars of fibrous roots. Texture hard and fragile, easily broken, fracture of bark yellow or brownish-yellow, wood yellow. Odor, characteristic; taste, bitter and astringent.
2. Root of *Gentiana straminea*: Subconical, 8~18 cm in length, 1~3 cm in diameter. Externally brown, with reticulated pits by fissures, lower part of main root frequently branched or gathered, slightly reticulated or braided, commonly known as "Ma Hua Jiao. Texture loose and fragile, easily broken, fracture frequently rotten-wood-shaped.
3. Root of *Gentiana crassicaulis*: Subcylindrical, relatively stout, often as one, less twisted, 12~20 cm in length, 1~3.5 cm in diameter. Externally yellowish-brown or dark brown, with longitudinal and twisted wrinkles. Apex of main root remained with pale yellow petiole and fibrous vascular bundles of leaf base. Taste, bitter and astringent.
4. Root of *Gentiana dahurica*: Long fusiform or cylindrical, 8~20 cm in length, 0.2~1 cm in diameter. Externally brownish-yellow or brown, with longitudinal and twisted furrows, yellow when peeled. Main root often as one, occasionally bifurcated, apex remained with stem base and fibrous leaf sheath. Texture loose and fragile, easily broken, fracture yellowish-white. Odor, slight; taste, bitter and astringent.

Microscopic identification:

1. **Transverse section:**
   (1) Root of *Gentiana macrophylla*: Both outer and inner periderm composed of 1 row of cork cells and several layers of phelloderm cells. Cortex composed of several rows of suboblong parenchymatous cells, containing rod-shaped crystals of calcium oxalate. Phloem scattered with phloem bundles, cells fine, mostly subrounded, arranged densely. Xylem composed of unlignified xylem parenchymatous cells and lignified vessels, vessels scattered or several in groups.
   (2) Root of *Gentiana straminea*: Both outer and inner periderm composed of 1 row of cork cells and several layers of phelloderm cells. Cortex composed of several rows of suboblong parenchymatous cells, cells larger at the outer side, with distinct intercellular spaces. Phloem cells subrounded, arranged densely. Cambium distinct, composed of 3~4 rows of flat and arranged densely parenchymatous cells, cells subrectangular or fusiform. Xylem composed of unlignified xylem parenchymatous cells and lignified vessels, vessels scattered or several in groups. Oil droplets present, rod-shaped crystals of calcium oxalate occasionally found.
   (3) Root of *Gentiana crassicaulis*: Both outer and inner periderm composed of 1 row of cork cells and several layers of phelloderm cells. Cortex composed of several rows of suboblong parenchymatous cells, cells larger at the outer side, with distinct intercellular spaces. Cambium distinct, composed of 3~4 rows of flat and arranged densely parenchymatous cells. Xylem composed of unlignified xylem parenchymatous cells and lignified vessels, vessels scattered or several in groups. Oil droplets present, rod-shaped crystals of calcium oxalate occasionally found.
   (4) Root of *Gentiana dahurica*: Outer periderm easily fallen off, remains of cork cells occasionally found. Between outer and inner periderm shows obliterate phloem tissue, scattered with lignified reticular sclerenchymatous cells or several in groups, subrectangular or fusiform, lignified, with reticular or elongated-oblique pits on the surface. Inner periderm composed of 1 row of cork cells and several rows of phelloderm cells. Cortex composed of several rows of subrounded parenchymatous cells, cells larger at the outer side, with intercellular spaces. Phloem cells mostly subrounded, cells larger at the outer side, cells in the inner side relatively small and arranged densely. Cambium distinct, composed of 3~4 rows of flat and arranged densely parenchymatous cells. Xylem composed of unlignified xylem parenchymatous cells and lignified vessels, vessels scattered or several in groups. Oil droplets and rod-shaped crystals of calcium oxalate also present.
2. **Powder:**
   (1) Root of *Gentiana macrophylla*: Yellowish-brown. Cork cells subpolygonal, subrectangular or irregular in surface view, 20~166 μm in diameter and up to 198 μm in length, wall thin and slightly curved, periclinal walls with laterally fine striations, lumen containing oil droplets visible, each cell divided irregularly into 2~12 small cells, separator wall faintly present, unevenly thickened. Raphides of calcium oxalate scattered in parenchymatous cells, 10~18 μm in length. A few of crystals are fine-fusiform, granular-shaped or flaky. Endodermal cells huge, colorless or pale yellow; intact ones

subrectangular or flattened-square in surface view, 85~542 μm in length and 18~153 μm in diameter, wall thin, periclinal walls with laterally linear and fine striations, each large cell divided into 2~10 small palisade cells, and each small cell also divided into 2~5 cells. Spiral and reticulate vessels 8~67 μm in diameter.

(2) Root of *Gentiana straminea*: Brown. Reticular sclerenchymatous cells fusiform, subtriangular or long strip-shaped, with terminal slightly large, obtuse-rounded or truncate, occasionally lateral hook-shaped at one end, 20~65 μm in diameter and 20~240 μm in length, wall slightly thickened and lignified, pits long slit-shaped, varying in density, mostly longitudinal, oblique or slightly twisted occasionally present. Raphides of calcium oxalate fine, scattering in parenchymatous cells, 3~7 μm in length. Cork cells long-fusiform, subsquare or subrectangular in surface view, 20~80 μm in diameter and up to 200 μm in length, wall thin, each cell divided into 2~8 small cells; occasionally each cell divided into 2 small cells, and each small cell also divided into 2~5 cells. Endodermal cells (rootlets) pale yellowish-green or almost colorless, long strip-shaped, both ends truncate or slightly oblique, 10~20 μm in diameter and up to about 198 μm in length, walls thickened on three sides and thin on one side, up to about 7 μm thick, with relatively sparse pit canals.

(3) Root of *Gentiana dahurica*: Yellowish-brown. Reticular sclerenchymatous cells singly scattered or several in groups, usually linked with cork cells, pale yellow or pale greenish-yellow, cells subfusiform, subtriangular or subrectangular, 20~70 μm in diameter and 65~210 μm in length, wall spiral-shaped or reticulate-shaped thickened and lignified; occasionally with walls spiral-shaped thickened, obliquely overlapped and twisted, pits longitudinal or obliquely slit-shaped, irregularly suboblong, fine oblong or occasionally found. Crystals of calcium oxalate fine, needle-like or rod-shaped, up to about 10 μm in length, occasionally granular-shaped. Cork cells subfusiform or rectangular in surface view, 20~65 μm in diameter and up to 180 μm in length, wall thin and slightly curved, each cell divided into 2~8 small cells; occasionally each cell divided into 2 small cells, and each small cell also divided into 2~4 cells. Endodermal cells pale yellowish-green, long strip-shaped, both ends truncate or slightly oblique, 10~25 μm in diameter and up to about 315 μm in length, walls thickened on three sides and thin on one side, up to about 10 μm thick, pit canals warty protuberance, fine double circles shaped in surface view.

Thin layer chromatographic identification test (General rule 1010.3):

1. Sample solution: Add 1.0 g of powdered sample to 10 mL of methanol, ultrasonicate for 30 minutes, cool, filter and make up the filtrate to 10 mL with methanol.
2. Reference drug solution: Use 1.0 g of the reference drug as the same method described above.
3. Reference standard solution: Weigh accurately a quantity of gentiopicrin and dissolve in methanol to produce a solution containing 1.0 mg per mL.
4. Procedure: Use silica gel F_{254} as the coating substance and a solution of ethyl acetate, methanol and water (10:2:1) as the developing solvent. Apply 10 μL of each of the above solutions to the plate. Once the top of the solvent rise to about 5~10 cm from the origin, dry in air. Examine under the ultraviolet light at 254 nm. The spots in the chromatogram obtained from the sample solution correspond in R_f values and color to the spots in the chromatogram obtained from the reference drug solution and the reference standard solution.

Impurities and other requirements:

1. Loss on drying: Not more than 9.0% under heating at 105℃ for 5 hours (General rule 5008).
2. Total ash: Not more than 8.0% (General rule 5004).
3. Acid-insoluble ash: Not more than 4.0% (General rule 5004).

Assay:

1. Gentiopicrin and Loganic acid:
   (1) Mobile phase: A solution of acetonitrile and 0.1% acetic acid (9:91). The ratio varies as required.
   (2) Reference standard solution: Weigh accurately a quantity of gentiopicrin and loganic acid and dissolve in methanol to produce a solution containing 0.5 mg and 0.3 mg per mL of each.
   (3) Sample solution: Weigh accurately 0.5 g of powdered sample, transfer to a conical flask with stopper, add accurately 20 mL of methanol, ultrasonicate for 30 minutes, cool, weigh again, replenish the loss of the weight with methanol, mix well then filter, use the successive filtrate.
   (4) Chromatographic system: The liquid chromatography is equipped with an ultraviolet absorption photometer (wavelength: 254 nm) and a column packed with octadecylsilanized silica gel. The number of theoretical plates of the peak of gentiopicrin should not be less than 3,000.

(5) Procedure: Inject accurately 5~10 μL of each of the reference standard solution and the sample solution into the liquid chromatography apparatus, and calculate the content.

2. Water extractives: Carry out the method for determination of water extractives (General rule 5006).
3. Dilute ethanol extractives: Carry out the method for determination of dilute ethanol-soluble extractives (General rule 5006).

Storage: Store in a ventilated and dry place.
Usage: Wind-dampness-dispelling medicinal.
Dosage: 3~10 g.

GENTIANAE RADIX ET RHIZOMA
龍膽
Long Dan / Long Dan
Chinese Gentian Root and Rhizome

Chinese gentian root and rhizome is the dried root and rhizome of *Gentiana scabra* Bge., *Gentiana manshurica* Kitag., *Gentiana triflora* Pall. or *Gentiana rigescens* Franch. (Fam. Gentianaceae). The former three are commonly known as ”Long Dan” and the latter is commonly known as ”Jian Long Dan”.
It contains not less than 26.0% of dilute ethanol-soluble extractives, not less than 30.0% of water extractives and not less than 3.0% and 1.5% of gentiopicrin of Long Dan and Jian Long Dan.

Description:

1. Root and rhizome of *Gentiana scabra*: Rhizomes mostly horizontal, 0.5~3 cm in length, 0.3~0.8 cm in diameter, externally grayish-brown or dark brown, with numerous remained scars of stems, the lower part with 4~30 roots, often more than 20. Roots slender and cylindrical, slightly twisted, 1~3 cm in diameter, externally grayish-white or brownish-yellow, the upper part with relatively distinct transverse striations, the lower part with longitudinal wrinkles and rootlet scars. Texture fragile, soft when moistened, fracture yellowish-brown, wood yellowish-white and arranged in a ring, pith distinct in the center. Odor, slight; taste, extreme bitter.
2. Root and rhizome of *Gentiana manshurica*: Rhizome mostly straight, lump-shaped or long lump-shaped, 0.5~1.5 cm in length, 0.4~0.7 cm in diameter, the lower part tufted with 2~16 roots, often less than 10. Roots about 15 cm in length, 0.2~0.4 cm in diameter, externally yellowish-brown or grayish-brown, with twistedly longitudinal wrinkles, the upper part with distinctly finely transverse striations and few protuberant scars of rootlets.
3. Root and rhizome of *Gentiana triflora*: Rhizome mostly straight, 1~5.5 cm in length, 0.7~1.5 cm in diameter, the lower part with 4~30 roots, often more than 15. Roots 0.1~0.6 cm in diameter, externally yellowish-white, with relatively distinct transverse striations wholly.
4. Root and rhizome of *Gentiana rigescens*: Rhizome nodular, externally without transverse wrinkles but remained stems, the lower part with 4~30 roots. Roots slender and fusiform, slightly curved, 0.1~0.4 cm in diameter, externally pale brown or brown, outer later membranous and easily falling off. Wood white.

Microscopic identification:

1. **Transverse section:**
   (1) Root and rhizome of *Gentiana scabra*: Exodermal cells subrounded or flat-rounded, elongated tangentially, outer walls slightly thickened and suberized, usually containing fatty oil droplets. Cortex narrow; endodermis distinct, composed of 3~5 rows of cells, arranged sparsely with clefts; the inner layer 1 row, cells elongated tangentially into strip-shaped, some cells divided into several small cells. Phloem broad, with irregular clefts at the outside; sieve tube groups fine, relatively distinct near cambium. Xylem rays varying in width, vessel bundles 8~9, occasionally V-shaped branched. Pith composed of parenchymatous cells. Parenchymatous cells contain fine raphides of calcium oxalate or prism crystals, 2.5~5 μm in length.
   (2) Root of *Gentiana manshurica*: Cambium usually in a ring, crystals of calcium oxalate in parenchymatous cells 2.5~10 μm in length, also containing fatty oil droplets.
   (3) Root of *Gentiana triflora*: Parenchymatous cells mostly shrunken and obliterated, parenchymatous cells inside phloem contain abundant crystals of calcium oxalate, 3~15 μm in length.
   (4) Root of *Gentiana rigescens*: Exodermis and parenchymatous cells of cortex mostly fallen off. Endodermal cells divided longitudinally into several small cells. Phloem broad, cambium ring indistinct, xylem vessels well developed, distributed densely in the center, without pith.

Thin layer chromatographic identification test (General rule 1010.3):

1. Sample solution: Add 1.0 g of powdered sample to 10 mL of methanol, ultrasonicate for 30 minutes, cool, filter, and make up the filtrate to 10 mL.
2. Reference drug solution: Use 1.0 g of the reference drug as the same method described above.
3. Reference standard solution: Weigh accurately a quantity of gentiopicrin and dissolve in methanol to produce a solution containing 1.0 mg per mL.

4. Procedure: Use silica gel F_{254} as the coating substance and a solution of *n*-butanol, glacial acetic acid and water (7:1:2) as the developing solvent. Apply 10 μL of each of the above solutions to the plate. Once the top of the solvent rise to about 5~10 cm from the origin, dry in air. Spray a solution of *p*-anisaldehyde in sulfuric acid (*p*-Anisaldehyde/H_2SO_4 TS). Examine under the ultraviolet light at 365 nm. The spots in the chromatogram obtained from the sample solution correspond in R_f values and color to the spots in the chromatogram obtained from the reference drug solution and the reference standard solution.

Impurities and other requirements:
1. Total ash: Not more than 8.0% (General rule 5004).
2. Acid-insoluble ash: Not more than 4.0% (General rule 5004).
3. Total heavy metals: Not more than 10.0 ppm (General rule 3005).
4. Arsenic (As): Not more than 5.0 ppm (General rule 3006, 3049, 3050).

Assay:
1. Gentiopicrin:
   (1) Mobile phase: A solution of methanol and water (25:75). The ratio varies as required.
   (2) Reference standard solution: Weigh accurately a quantity of gentiopicrin and dissolve in methanol to produce a solution containing 0.2 mg per mL.
   (3) Sample solution: Weigh accurately 0.5 g of the powdered sample, accurately add 20 mL of methanol, weigh, heat under reflux for 15 minutes, cool, weigh again, replenish the loss of the weight with methanol, mix well, filter, take 2 mL of the filtrate to a 10-mL volumetric flask, add methanol to volume, and mix well.
   (4) Chromatographic system: The liquid chromatography is equipped with an ultraviolet absorption photometer (wavelength: 270 nm) and a column packed with octadecylsilanized silica gel. The number of theoretical plates of the peak of gentiopicrin should not be less than 3,000.
   (5) Procedure: Inject accurately 10 μL of each of the reference standard solution and the sample solution into the liquid chromatography apparatus, and calculate the content.
2. Water extractives: Carry out the method for determination of water extractives (General rule 5006).
3. Dilute ethanol extractives: Carry out the method for determination of dilute ethanol-soluble extractives (General rule 5006).

Storage: Store in a dry place.
Usage: Heat-clearing medicinal.
Dosage: 3~6 g.

GINKGO SEMEN
白果
Bai Guo / Bai Guo
Ginkgo Seed

Ginkgo seed is dried ripe seed of *Ginkgo biloba* L. (Fam. Ginkgoaceae) without the fleshly testa.
It contains not less than 5.0% of dilute ethanol-soluble extractives and not less than 6.0% of water extractives.

Description: Oval or ellipsoidal, 1.5~3 cm in length, 1~2.2 cm in width. Mesotesta (shell) bony, glossy, yellowish-white or pale yellowish-brown, a protuberant dot at the base, with a rib on each side, occasionally with 3 ribs. Endotesta membranous, reddish-brown or pale yellowish-brown. Endosperm pale yellowish-green, fleshy, starchy, with a fissure in the center, embryo tiny. Odor; slight; taste slightly sweet and bitter.

Microscopic identification:
1. **Powder:** Pale yellowish-brown. Individual starch granules oblong, round, ovate or subtriangular, 5~18 μm in length, hilum dotted, cleft-shaped, V-shaped or Y-shaped, large one with distinct striations. Stone cells scattered singly or in groups of several to over 10, subrounded, oblong, subrectangular, conchoidal or irregular, occasionally with protuberance, 61~322 μm in length, 27~125 μm in diameter, walls thickened, with distinct pits, pit canals and striations, some lumina contain yellowish-brown or reddish-brown contents. Parenchymatous cells of endotesta pale yellowish-brown or reddish-brown, subsquare, rectangular or polygonal. Parenchymatous cells of endosperm colorless, subrounded or oblong, filled with starch granules. Bordered-pitted tracheid mostly broken, 33~72 μm in diameter, acuminate or obtusely rounded at the end.

Thin layer chromatographic identification test (General rule 1010.3):
1. Sample solution: Add 10 g of powdered sample to 40 mL of methanol, heat under reflux for 1 hour, filter, evaporate the filtrate to dryness, dissolve the residue in 15 mL of water, filter with few cotton, apply the filtrate to a column (10~15 mm in inner diameter) packed with polyamide (80~100 mesh, 3.0 g), elute with 70 mL of water, collect the eluates, extract shaking twice each time with 40 mL of ethyl acetate, combine ethyl acetate extracts, evaporate to dryness, dissolve the residue in 1 mL of methanol.
2. Reference drug solution: Use 10 g of the reference drug as the same method described above.

3. Reference standard solution: Weigh accurately a quantity of ginkgolide A and ginkgolide C and dissolve in methanol to produce a solution containing 0.5 mg per mL of each.
4. Procedure: Use silica gel F_{254} mixed with a solution of sodium carboxymethyl cellulose containing 4% sodium acetates as the coating substance and a solution of toluene, ethyl acetate, acetone and methanol (10:5:5:0.6) as the developing solvent. Apply 10 μL of each of the above solutions to the plate. Once the top of the solvent rise to about 5~10 cm from the origin, dry in air, Spray with a solution of acetic anhydride, heat at 140~160℃ for 30 minutes and examine under ultraviolet light at 365 nm. The spots in the chromatogram obtained from the sample solution correspond in R_f values and color to the spots in the chromatogram obtained from the reference drug solution and the reference standard solution.

Impurities and other requirements:
1. Total ash: Not more than 4.0% (General rule 5004).
2. Acid-insoluble ash: Not more than 1.0% (General rule 5004).
3. Sulfur dioxide: Not more than 500.0 ppm (General rule 3051).

Assay:
1. Water extractives: Carry out the method for determination of water extractives (General rule 5006).
2. Dilute ethanol extractives: Carry out the method for determination of dilute ethanol-soluble extractives (General rule 5006).

Storage: Refrigerate or store in a cool and dry place.
Usage: Phlegm-dispelling, cough-suppressing and panting-calming medicinal.
Dosage: 4.5~9 g.
Precaution and warning: Unprocessed one toxic.

GINSENG RADIX
人參
Ren Shen / Ren Shen
Ginseng Root

Ginseng root is the dried root of *Panax ginseng* C. A. Meyer (Fam. Araliaceae). The drug derived from the cultivated form is commonly known as "Yuan Shen" (garden ginseng) and the drug derived from the wild origin is commonly known as "Shan Shen" (wild ginseng).
It contains not less than 0.30% of the total amount of ginsenoside Rg_1 and ginsenoside Re and not less than 0.20% of ginsenoside Rb_1.

Description:
1. Yuan Shen: Main roots (Senti) cylindrical, externally pale yellow, the upper part of root exhibiting transverse-striations. Rhizomes (Lutou) 2~6 cm in length, 0.5~1.5 cm in diameter, with sparse depressed-circular stem scars (Luwan) and adventitious roots. Lateral roots 2~6, branched, fibrous root with fine tubercles. This product results in two different processing methods, upon the processing method, divide into two different kinds of ginsengs. White ginseng with sun-dried or dried by heat and red ginseng with steaming and drying. White ginseng white or khaki garden ginseng and wild ginseng, dividing into Senpian (slide piece), Senwei (thin roots) and Senshiu (rootlets). Red ginseng is processed by garden ginseng, also dividing into Senpian, Senwei, and Senshiu.
   (1) White ginseng (Bai Shen): Main roots 3~10 cm in length, externally khaki, with blackish brown transverse striations and longitudinal wrinkles, lateral roots thin, fibrous scars. Texture fragile, light, fracture even, white, with radial fissures. Odor, fragrant; taste, bitter.
   (2) Red ginseng (Hung Shen): Main roots 5~20 cm in length, 0.7~2 cm in width, externally reddish-brown, translucent, with large transverse striations, indistinct annulations and scars of lateral roots. Rhizomes externally khaki, with circular stem scars 4~6. Texture hard and fragile, fracture even, horny, reddish-brown, with a pale colored center of the circle. Odor, fragrant; taste, slightly bitter.
2. Shan Shen: Main roots stout, as long as or shorter than rhizomes, main lateral roots 2, V-shaped, the upper part with deeply transverse annulations. Rhizomes slender, 3~9 cm in length, the upper part curved, with dense depressed-circular stem scars (Luwan), the lower part smooth. Fibrous roots less, 1~2 times longer than main roots, flexibility, uneasily broken, with distinct tubercles. Externally pale yellowish-white, smooth, lustrous. Odor, strong; taste sweet and slightly bitter.

Microscopic identification:
1. **Transverse section:** Outermost layer composed of 1 row of epidermal cells covered with cuticle, mostly broken, cells rectangular or subsquare. Phelloderm composed of 7~10 layers of rectangular, subrectangular or subsquare cells. Cortex narrow, composed of 3~5 layers of rectangular or flattened-rectangular cells, scattered with clusters of calcium oxalate. Phloem occupied about 1/3 portion of the root, mainly composed of parenchymatous cells filled with starch granules; cells rectangular, subrectangular, subsquare, subpolygonal or subrounded, with distinct intercellular spaces; scattered with clusters of calcium oxalate and resin

canals containing yellow secretions, resin canals composed of 5~8 flat and small cells, rounded or elongated-rounded, 30~85 μm in diameter; phloem showing irregular clefts in the outer part, cells arranged densely in the inner part, relatively numerous resin canals arranged in a ring near cambium. Cambium in a distinct ring, composed of 3~5 rows of rectangular or flattened-rectangular cells. Xylem broad, occupied about 2/3 portion of the root, composed of vessels, xylem parenchymatous cells and xylem fibers; vessels huge, singly scattered or several linked, arranged interruptedly and radially, unlignified fibers occasionally found beside vessels; vessels 16~56 μm in diameter, mainly reticulate or scalariform, a few spiral, cells subrounded, subpolygonal, subovate or subsquare. Pith broad, extending to phloem, composed of subrectangular, subsquare, subpolygonal or subrounded parenchymatous cells, filled with starch granules, clusters of calcium oxalate occasionally found. Primary xylem existed in the center, scattered with few vessels, mainly composed of small parenchymatous cells.

2. **Powder:** Pale yellowish-white. Cork cells pale yellowish brown in surface view, walls thin and lignified, cells subrectangular, subsquare or flattened-rectangular, containing starch granules and parenchymatous cells with clusters of calcium oxalate, with distinct intercellular spaces, cells subrectangular, subsquare or rectangular. Resin canals 30~85 μm in diameter or larger in longitudinal view, containing yellowish-brown secretions; resin canals contain yellowish-brown secretions in sectional view, composed of 5~8 flat and small cells, rounded or elongated-rounded. Vessels huge, 16~56 μm in diameter, mainly reticulate or scalariform, a few spiral, lignified. Clusters of calcium oxalate 20~90 μm in diameter, the angles mostly blunt. Starch granules extremely abundant; simple granules subrounded, 2~20 μm in diameter, hilum dotted, V-shaped, slit-shaped or Y-shaped, striations indistinct; compound granules varying in size, composed of 2~6 components.

Thin layer chromatographic identification test (General rule 1010.3):

1. Sample solution: Add 1.0 g of powdered sample to 40 mL of chloroform, heat under reflux for 1 hour, discard the chloroform layer, and evaporate the residue to dryness. Moisten the residue with 0.5 mL of water, add 10 mL of *n*-butanol saturated with water, ultrasonicate for 30 minutes. Take the supernatant, add 3 fold volumes of ammonia TS, mix well and stand. Evaporate the supernatant to dryness, dissolve the residue in 1 mL of methanol.
2. Reference drug solution: Use 1.0 g of the reference drug as the same method described above.
3. Reference standard solution: Weigh accurately a quantity of ginsenoside Rb_1, ginsenoside Re, ginsenoside R_f and ginsenoside Rg_1 and dissolve in methanol to produce a solution containing 2.0 mg per mL of each.
4. Procedure: Use silica gel F_{254} as the coating substance and the lower layer of a solution of chloroform, ethyl acetate, methanol and water (15:40:22:10), standing below 10 ℃ as the developing solvent. Apply 1~2 μL of each of the above solutions to the plate. Once the top of the solvent rise to about 5~10 cm from the origin, dry in air, spray with a 10% solution of sulfuric acid in ethanol, heat at 105℃ until the spots become visible. The spots in the chromatogram obtained from the sample solution correspond in R_f values and color to the spots in the chromatogram obtained from the reference drug solution and the reference standard solution.

Impurities and other requirements:

1. Total heavy metals: Not more than 20.0 ppm (General rule 3005).
2. Arsenic (As): Not more than 2.0 ppm (General rule 3006, 3049, 3050).
3. Pesticide residues:
   (1) The total DDT content: Not more than 1.0 ppm (General rule 3052).
   (2) The total BHC content: Not more than 0.9 ppm (General rule 3052).
   (3) The total PCNB content: Not more than 1.0 ppm (General rule 3052).

Assay:

1. Ginsenoside Rg_1, ginsenoside Re, ginsenoside Rb_1:
   (1) Mobile phase: A solution of acetonitrile as the mobile phase A, and a solution of water as the mobile phase B.
   (2) Reference standard solution: Weigh accurately a quantity of ginsenoside Rg_1, ginsenoside Re and ginsenoside Rb_1 and dissolve in methanol to produce a solution containing 0.2 mg per mL of each.
   (3) Sample solution: Weigh accurately 1.0 g of powdered sample, transfer to a Soxhlet extractor, add chloroform, heat under reflux for 3 hours, discard the chloroform solution, and evaporate the residue to dryness. Transfer the residue with the filter paper tube into a 100 mL conical flask. Accurately add 50 mL of *n*-butanol saturated with water, stopper tightly, stand overnight, ultrasonicate for 30 minutes and filter. Evaporate accurately 25 mL of the successive filtrate to dry in an evaporating dish, dissolve the residue in methanol, transfer to a 5-mL volumetric flask, add methanol to volume and mix well.
   (4) Chromatographic system: The liquid chromatography is equipped with an ultraviolet absorption photometer (wavelength: 203 nm) and a column packed with octadecylsilane bonded silica gel.

Program the chromatographic system as follows. The number of theoretical plates of the peak of ginsenoside Rg_1 should not be less than 6,000.

Time (min)	Mobile phase A (%)	Mobile phase B (%)
0~35	19	81
35~55	19→29	81→71
55~70	29	71
70~100	29→40	71→60

(5) Procedure: Inject accurately 10 μL of the reference standard solution and 10~20 μL of the sample solution into the liquid chromatography apparatus, and calculate the content.

Storage: Refrigerate or store in a cool and dry place, preserve in a well-closed container, and protect from insects.
Usage: Tonifying and replenishing medicinal (Qi-tonifying medicinal).
Dosage: 3~10 g.

GLEDITSIAE ABNORMALIS FRUCTUS
豬牙皂
Jhu Ya Zao / Zhu Ya Zao
Chinese Honeylocust Abnormal Fruit

Chinese honeylocust abnormal fruit is the dried sterile fruit of *Gleditsia sinensis* Lam. (Fam. Leguminosae).
It contains not less than 26.0% of dilute ethanol-soluble extractives and not less than 26.0% of water extractives.

Description: Sickle-shaped, 4~12 cm in length, 0.5~1.2 cm in width, 0.3~1 cm thick. Externally purplish-brown or purplish-black, covered with grayish-white, waxy and frost-like powders, lustrous after remove powders, some scattered with fine warts and pale yellow short fissures. Apex with a beak-shaped remained stylopodium, base with a short fruit stalk scar. The curve side (ventral suture) raised as ridge-like. Texture hard and fragile, fracture brownish-yellow. Exocarp coriaceous; mesocarp fibrous; endocarp starchy, lax in the center, with grayish-green or pale brownish-yellow filiform substances. In transverse section, hollows arranged regularly, seldom with seeds. Odor, slight and irritant; taste, slightly bitter, pungent, and the powder cause sneezed.

Microscopic identification:
1. **Transverse section:** Exocarp composed of 1 layer of subrectangular epidermal cells, covered with cuticle. Mesocarp broad, an annular band composed of stone cells located on the outer side, fiber bundles well developed in dorsal and ventral suture, stone cells occasionally present at the outer and inner side or among fiber bundles, parenchymatous cells contain prisms of calcium oxalate. Beneath fiber bundles showing vascular bundles arranged in a ring. Collateral vascular bundles with xylem vessels small, a few of fibers visible. Endocarp with several layers of fibers, arranged horizontally or obliquely. Fibers 15~25 μm in diameter, pit canals distinct, stone cells usually embedded on the outside.
2. **Powder:** Reddish-brown. Stone cells subrounded, subsquare, elongated-rounded, fusiform or irregularly strip-shaped, some cell margins sinuous or short branched, 12~51 μm in diameter, up to 160 μm in length, wall 5~22 μm thick, striations visible, pit canals mostly distinct, lumen relatively small, a few of cells contain brown contents, clusters or prisms of calcium oxalate. Fibers long-fusiform, 16~36 μm in diameter, wall 5~12 μm thick, lignified, accompanied by small and subsquare stone cells or crystal-containing sclerenchymatous cells, forming crystal fibers. Crystal-containing sclerenchymatous cells subsquare, 8~25 μm in diameter, wall unevenly thickened and lignified, lumen containing prisms of calcium oxalate or 2 prism crystals, occasionally containing cluster crystals; prisms of calcium oxalate 5~20 μm in diameter, up to 27 μm in length. Lignified parenchymatous cells and epidermal cells of pericarp also visible.

Thin layer chromatographic identification test (General rule 1010.3):
1. Sample solution: Add 1.0 g of powdered sample to 10 mL of methanol, ultrasonicate for 30 minutes, filter, evaporate the filtrate to dryness, dissolve the residue in 10 mL of water, extract shaking with 10 mL of ethyl acetate, evaporate the ethyl acetate extract to dryness, and dissolve the residue in 1 mL of methanol.
2. Reference drug solution: Use 1.0 g of the reference drug as the same method described above.
3. Procedure: Use silica gel F_{254} as the coating substance and the lower layer of a solution of chloroform, methanol, water and glacial acetic acid (18:1:0.6:0.2) as the developing solvent. Apply 10 μL of each of the above solutions to the plate. Once the top of the solvent rise to about 5~10 cm from the origin, dry in air. Spray with a 10% solution of sulfuric acid in ethanol (H_2SO_4/EtOH TS) and heat at 105℃ until the spots become visible. The spots in the chromatogram obtained from the sample solution correspond in R_f values and color to the spots in the chromatogram obtained from the reference drug solution.

Impurities and other requirements:
1. Loss on drying: Not more than 14.0% under heating at 105℃ for 5 hours (General rule 5008).

2. Total ash: Not more than 7.0% (General rule 5004).
3. Acid-insoluble ash: Not more than 1.0% (General rule 5004).

Assay:
1. Water extractives: Carry out the method for determination of water extractives (General rule 5006).
2. Dilute ethanol extractives: Carry out the method for determination of dilute ethanol-soluble extractives (General rule 5006).

Storage: Store in a ventilated and dry place, and protect from insects.
Usage: Phlegm-dispelling, cough-suppressing and panting-calming medicinal.
Dosage: 1~1.5 g.
Precaution and warning: Contraindicated in pregnancy.

GLEDITSIAE FRUCTUS
皂莢
Zao Jia / Zao Jia
Chinese Honeylocust Fruit

Chinese honeylocust fruit is the dried ripe fruit of *Gleditsia sinensis* Lam. (Fam. Leguminosae), commonly known as "Zao Jiao".
It contains not less than 25.0% of dilute ethanol-soluble extractives and not less than 30.0% of water extractives.

Description: Flattened long strip or sheath-shaped, slightly curved, slightly protuberant at the location of seeds, 12~25 cm in length, 2~4 cm in width, 1~1.5 cm thick. Externally purplish-brown or blackish-brown, covered with grayish-white wax, lustrous when remove powder, apex acute, base attenuate, with a short stalk or a stalk scar, distinct longitudinal ribbed on the both sides, soundable when shaking. Texture hard, fracture yellow, fibrous. Seed numerous, ovate, 1~1.4 cm in length, 8 mm in width, yellow-brown, smooth. Odor, characteristic, with a strong irritant leading to sneezing; taste, pungent.

Identification:
1. Take 1.0 g of powdered sample, add 8 mL of ethanol, heat under reflux for 5 minutes, cool, filter. Evaporate 0.5 mL of the filtrate to dryness in a small porcelain dish, cool, add 3 drops of acetic anhydride, mix well, add 2 drops of sulfuric acid along the wall of the dish, a reddish-purple color is produced gradually.
2. Take 1.0 g of powdered sample, add 10 mL of water, boil for 10 minutes, filter and shake the filtrate well, a lasting foam continuing more than 15 minutes is produced.

Impurities and other requirements:
1. Loss on drying: Not more than 14.0% under heating at 105℃ for 5 hours (General rule 5008).
2. Total ash: Not more than 6.0% (General rule 5004).
3. Acid-insoluble ash: Not more than 1.0% (General rule 5004).

Assay:
1. Water extractives: Carry out the method for determination of water extractives (General rule 5006).
2. Dilute ethanol extractives: Carry out the method for determination of dilute ethanol-soluble extractives (General rule 5006).

Storage: Store in a ventilated and dry place, and protect from insects.
Usage: Phlegm-dispelling medicinal (Cold-phlegm warming and resolving medicinal).
Dosage: 1.5~5 g for decocting, 0.3~1.5 g for powdering.
Precaution and warning: Contraindicated in pregnancy, qi and yin deficiency and hemoptysis.

GLEDITSIAE SPINA
皂角刺
Zao Jiao Cih / Zao Jiao Ci
Chinese Honeylocust Spine

Chinese honeylocust spine is the dried spine of *Gleditsia sinensis* Lam. (Fam. Leguminosae), commonly known as "Zao Ci".

Description: Composed of main spines and 1~2 branched spines. Main spines conical, apex acute, 3~15 cm in length, 0.4~1 cm in diameter; branched spines 1~6 cm in length. Externally yellowish-brown, purplish-brown or brown, lustrous, with fine and small wart protuberances and longitudinal wrinkles. Texture light and hard, uneasily broken. Odor, slight; taste, weak.

Microscopic identification:
1. **Transverse section:** Epidermis composed of 1 layer of flat-rectangular cells, covered with cuticle. Cortex composed of 2~3 layers of cells, containing brown contents. Pericycle fiber bundles arranged in an interrupted ring, the walls of fibers lignified, prisms of calcium oxalate present in the surrounding cells; clusters of calcium oxalate rare, occasionally forming crystal fibers; stone cells rare, scattering in fiber bundles. Phloem narrow; xylem relatively broad, vessels fine; xylem rays 1~2 rows cells, xylem bundles distributed to pith. Pith broad, parenchymatous cells large, small cells usually in the center, surrounded by elongated cells arranged radially, forming chrysanthemum-shaped; some cells contain reddish-brown contents.
2. **Powder:** Reddish-brown. Epidermal cells rectangular, covered with cuticle. Parenchymatous cells of cortex round or long-oblong, 15~40 μm in diameter, containing yellowish-brown contents. Fibers scattered, strip-shaped, 5~10 μm in diameter.

Prisms or clusters of calcium oxalate existed in parenchymatous cells. The differences between xylem parenchymatous cells, xylem fibers and vessels indistinct, mostly flaky and extremely lignified. Vessels mostly spiral. Parenchymatous cells of pith large, round, long-oblong or polygonal, varying in size, 20~80 μm in diameter, few containing brown contents.

Thin layer chromatographic identification test (General rule 1010.3):

1. Sample solution: Add 1.0 g of powdered sample to 10 mL of methanol, ultrasonicate for 30 minutes, evaporate to dryness, dissolve the residue in 10 mL of water, extract by shaking with 10 mL of ethyl acetate, evaporate to dryness, and dissolve the residue in 1 mL of methanol.
2. Reference drug solution: Use 1.0 g of the reference drug as the same method described above.
3. Procedure: Use silica gel F_{254} as the coating substance and the lower layer of a solution of dichloromethane, methanol and concentrated ammonia solution (9:1:0.2) as the developing solvent. Apply 5~10 μL of the sample solution and 5 μL of the reference drug solution to the plate. Once the top of the solvent rise to about 5~10 cm from the origin, dry in air. Examine under the ultraviolet light at 365 nm. The spots in the chromatogram obtained from the sample solution correspond in R_f values and color to the spots in the chromatogram obtained from the reference drug solution.

Storage: Store in a dry place.
Usage: Blood-regulating medicinal (Blood-activating and stasis-dispelling medicinal).
Dosage: 3~10 g.

GLEHNIAE RADIX
北沙參
Bei Sha Shen / Bei Sha Shen
Coastal Glehnia Root

Coastal glehnia root is the dried root of *Glehnia littoralis* F. Schmidt ex Miq. (Fam. Umbelliferae).
It contains not less than 15.0% of dilute ethanol-soluble extractives and not less than 17.0% of water extractives.

Description: Cylindrical, branching occasionally, 15~40 cm in length, 3~10 mm in diameter, externally yellowish-white, rough, fine wrinkles longitudinally, and with brownish-yellow spotted lenticels and the scars of fibrous roots. Texture hard and fragile, easily broken. Sliced pieces small pieces or transverse cut, fracture yellowish-white, cambium ring brown distinct, bark with brownish-red small spots, wood yellow and hollow. Odor, slight; taste, sweetish.

Microscopic identification:

1. **Transverse section:** Cork composed of about 2~10 rows of cells, mostly removed. Cortex composed of 2~13 rows of subrounded or polygonal cells. Secretory canals subrounded, 25~120 μm in diameter, containing yellowish-brown contents. Phloem broad. Cambium distinct; in a ring. Xylem vessels arranged radially, lignified, cells subrounded, 15~40 μm in diameter. Rays composed of 2~3 rows of cells, arranged radially, 15~70 μm in length, 10~40 μm in diameter. Parenchymatous cells contain aleurone grains.
2. **Powder:** White. Secretory canals usually in fragments contain yellow secretions. Starch granules being gelatinized after processed; some ungelatinized starch granules subrounded or ovate, 2~10 μm in diameter, with hilum distinct. Vessels mainly reticulate, spiral and scalariform, 10~40 μm in diameter, lignified.

Impurities and other requirements:

1. Loss on drying: Not more than 13.0% under heating at 105℃ for 5 hours (General rule 5008).
2. Total ash: Not more than 4.0% (General rule 5004).
3. Acid-insoluble ash: Not more than 1.0% (General rule 5004).

Assay:

1. Water extractives: Carry out the method for determination of water extractives (General rule 5006).
2. Dilute ethanol extractives: Carry out the method for determination of dilute ethanol-soluble extractives (General rule 5006).

Storage: Store in a cool and dry place, and protect from moisture and insects.
Usage: Phlegm-dispelling medicinal.
Dosage: 4.5~9 g.

GLYCYRRHIZAE RADIX ET RHIZOMA
甘草
Gan Cao / Gan Cao
Liquorice Root and Rhizome

Liquorice root and rhizome is the dried root and rhizome of *Glycyrrhiza uralensis* Fisch., *Glycyrrhiza inflata* Bat. or *Glycyrrhiza glabra* L. (Fam. Leguminosae).
It contains not less than 20.0% of the water-soluble extractives and not less than 2.0% of glycyrrhizic acid.

Description: Cylindrical, 1~3 cm in diameter. The outer bark yellowish-brown or grayish-brown, with longitudinally wrinkles, buds and scale leaves. Inner externally pale yellow, fibrous. Distinct cambium ring present at the 2/3 of fracture of rhizome fibrous radius, small pith present in the center, xylem and phloem

arrange radial. Fracture rough and fibrous. Odor, slight and characteristic; taste, sweet.

Microscopic identification:

1. **Transverse section:** Cork composed of 10~20 layers of cells; near the outer layers of cork cells contain reddish-brown non-crystalline contents, the innermost 3~4 rows of cork cell walls relatively thickened and colorless. Cortex composed of 1~3 radially elongated layers of parenchymatous cells, containing prisms of calcium oxalate. Phloem broad, containing radially broad phloem rays; walls of phloem fibers quite thickened, usually in bundles, arranged radially, every phloem fiber bundle surrounded by crystal fibers, containing 10~35 μm in length prisms of calcium oxalate. Cambium composed of 3 to several layers of cells. Xylem arranged radially; xylem rays 3~5 cells wide; vessels yellow pitted or reticulate, 80~200 μm in diameter, surrounded by tracheids; xylem fiber bundles also surrounded by crystal fibers. Walls of xylem parenchymatous cells relatively thickened among vessels, containing pits; pith parenchymatous cells at the center, every parenchymatous cell filled with ovate or round simple granules, about 3~20 μm in length. Root without, but rhizome with a pith at the center.
2. **Powder:** Pale yellow. Phloem fibers and xylem fibers in bundles, thick-walled, yellow, surrounded by crystal fibers. Fragments of vessels and tracheids bordered-pitted or reticulate. Starch granules mostly ovate or rounded, 3~20 μm in diameter, mostly 4~10 μm in diameter. Fragments of cork cells dark brown, but bark removed powdered sample with no existence of cork tissue.

Thin layer chromatographic identification test (General rule 1010.3):

1. Sample solution: Add 2.0 g of powdered sample to 10 mL of methanol, ultrasonicate for 30 minutes, filter, and make up to 10 mL.
2. Reference drug solution: Use 2.0 g of the reference drug as the same method described above.
3. Reference standard solution: Weigh accurately a quantity of glycyrrhizic acid and dissolve in a solution of ethanol and water (7:3) to produce a solution containing 5.0 mg per mL.
4. Procedure: Use silica gel F_{254} as the coating substance and a solution of *n*-butanol, water and glacial acetic acid (7:2:1) as the developing solvent. Apply 2 μL of each of the above solutions to the plate. Once the top of the solvent rise to about 5~10 cm from the origin, dry in air, examine under ultraviolet light at 254 nm. The spots in the chromatogram obtained from the sample solution correspond in R_f values and color to the spots in the chromatogram obtained from the reference drug solution and the reference standard solution.

Impurities and other requirements:

1. Total ash: Not more than 10.0% (General rule 5004).
2. Acid-insoluble ash: Not more than 2.5% (General rule 5004).
3. Total heavy metals: Not more than 30.0 ppm (General rule3005).
4. Cadmium (Cd): Not more than 0.3 ppm (General rule 3049, 3050).
5. Lead (Pb): Not more than 5.0 ppm (General rule 3007, 3049, 3050).
6. Mercury (Hg): Not more than 0.2 ppm (General rule 3049).
7. Arsenic (As): Not more than 2.0 ppm (General rule 3006, 3049, 3050).
8. Copper (Cu): Not more than 20.0 ppm (General rule 3049).
9. Pesticide residues:
   (1) The total DDT content: Not more than 1.0 ppm (General rule 3052).
   (2) The total BHC content: Not more than 0.9 ppm (General rule 3052).
   (3) The total PCNB content: Not more than 1.0 ppm (General rule 3052).

Assay:

1. Glycyrrhizic acid:
   (1) Mobile phase: A solution of dilute acetic acid (1 in 15) and acetonitrile (3:2). The ratio varies as required.
   (2) Reference standard solution: Place glycyrrhizic acid in a phosphorus pentoxide dryer and depressurize at 50℃ (under 5 mmHg) for 12 hours. Weigh accurately 25 mg and dissolve in dilute ethanol to produce a 100 mL solution.
   (3) Sample solution: Weigh accurately 500 mg of powdered sample, transfer to a stoppered centrifugation tube, add 70 mL of ethanol, shake for 15 minutes, centrifuge. Take the supernatant, the residue add 25 mL of dilute ethanol, operated as above. Combine all supernatants, add dilute ethanol to 100 mL.
   (4) Chromatographic system: The liquid chromatography is equipped with an ultraviolet absorption photometer (wavelength: 254 nm) and a column (4~6 mm × 15~25 cm) packed with octadecylsilanized silica gel (5~10 μm in particle diameter). The column temperature is maintained at room temperature. The retention time of glycyrrhizic acid is about 10 minute. Inject reference standard solution into the liquid chromatography apparatus for five times, and record the peak areas. The relative standard deviation of the peak area of glycyrrhizic acid should not be more than 1.5%.
   (5) Procedure: Inject accurately 20 μL of each of the reference standard solution and the

sample solution into the liquid chromatography apparatus, and calculate the content.

2. Water extractives: Carry out the method for determination of water extractives (General rule 5006).

Storage: Preserve in a well-closed container, and protect from insects.
Usage: Tonifying and replenishing medicinal (Qi-tonifying medicinal).
Dosage: 2~10 g.

GRANATI PERICARPIUM
石榴皮
Shih Liou Pi / Shi Liu Pi
Pomegranate Pericarp

Pomegranate pericarp is the dried ripe pericarp of *Punica granatum* L. (Fam. Punicaceae).
It contains not less than 10.0% of tannins.

Description: Irregularly slices or gourd-shaped, vary in size, 1.5~3 mm thick. The outer surface reddish-brown, brownish-yellow or dark brown, slightly lustrous, rough, with numerous white protuberances. Apex with tubular persistent calyx, base with a fruit stalk or its scar. The inner surface yellow or brownish-yellow, remained with the dented scar of seeds and the scars of pulp vesicles. Texture hard and fragile, easily broken, fracture yellow, slightly granular. Odor, slight; taste, bitter and astringent.

Microscopic identification:

1. **Transverse section:** Exocarp composed of 1 layer of epidermal cells, arranged relatively densely, covered with cuticle. Mesocarp relatively thick, parenchymatous cells contain starch granules and clusters of prisms of calcium oxalate, stone cells singly scattered or in groups, subrounded, rectangular or irregular, less branched, walls relatively thickened, lumen large with pits; vascular bundles scattered. Parenchymatous cells of endocarp relatively small, also containing starch granules and clusters or prisms of calcium oxalate; vessels arranged radially.
2. **Powder:** Reddish-brown. Stone cells subrounded, rectangular or irregular, a few branched, 27~102 μm in diameter, walls relatively thickened with pits, lumen large. Epidermal cells subrectangular or ovate, walls slightly thickened. Clusters of calcium oxalate 5~28 μm in diameter, prisms 3~18 μm in length. Spiral and reticulate vessels 12~18 μm in diameter. Starch granules subrounded, 2~10 μm in diameter.

Thin layer chromatographic identification test (General rule 1010.3):

1. Sample solution: Add 3.0 g of powdered sample to 30 mL of absolute ethanol, heat under reflux for 1 hour, filter and evaporate the filtrate to dryness, dissolve the residue in 20 mL of water, filter, extract shaking twice each with 20 mL of petroleum ether (30~60℃), combine the water extracts, and then extract shaking twice each with 20 mL of ethyl acetate, combine the ethyl acetate extracts, evaporate the filtrate to dryness, dissolve the residue in 1 mL of methanol.
2. Reference drug solution: Use 3.0 g of the reference drug as the same method described above.
3. Reference standard solution: Weigh accurately a quantity of gallic acid and dissolve in methanol to produce a solution containing 1.0 mg per mL.
4. Procedure: Use polyamide as the coating substance and a solution of ethyl acetate, butanone, formic acid and water (10:1:1:1) as the developing solvent. Apply 5 μL of each of the above solutions to the plate. Once the top of the solvent rise to about 5~10 cm from the origin, dry in air. Spray with a 1% solution of ferric chloride in ethanol ($FeCl_3$/EtOH TS). The spots in the chromatogram obtained from the sample solution correspond in R_f values and color to the spots in the chromatogram obtained from the reference drug solution and the reference standard solution.

Assay:

1. Tannins:
   (1) Sample solution: Weigh accurately 10.0 g of powdered sample (containing about 1.0 g tannins), transfer to a conical flask, add 150 mL of water, place in a water bath for 30 minutes, cool and transfer to 250-mL volumetric flask, add water to volume, filter and use the filtrate.
   (2) Determination of total water soluble portion: Weigh accurately 25 mL of the sample solution, evaporate to dryness, take the residue under heating at 105℃ for 3 hours, weighed (T_1).
   (3) Determination of water soluble portion not combining with gelatin powder: Weigh accurately 100 mL of the sample solution, add 6.0 g of gelatin powder, shake for 15 minutes, filter, weigh accurately 25 mL of the filtrate, evaporate to dryness, take the residue under heating at 105℃ for 3 hours, weighed (T_2).
   (4) Determination of water soluble portion combining with gelatin powder: Weigh accurately 100 mL of water, add 6.0 g of gelatin powder, shake for 15 minutes, filter, weigh accurately 25 mL of the filtrate, evaporate to dryness, take the residue under heating at 105℃ for 3 hours, weighed (T_0).
   (5) Calculate the content of tannins as following formula:

$$\text{Content of tannins (\%)} = \frac{(T_1 - T_2 + T_0) \times 10}{W} \times 100$$

W is the weight of the sample taken (g).

Storage: Store in a ventilated and dry place, and protect from moisture and mold.
Usage: Astringent and worm-expelling medicinal.
Dosage: 3~10 g.

GYPSUM FIBROSUM
石膏
Shih Gao / Shi Gao
Gypsum

Gypsum is the mineral of hydrous calcium sulfate ($CaSO_4 \cdot 2H_2O$).
It contains not less than 95.0% of hydrous calcium sulfate ($CaSO_4 \cdot 2H_2O$).

Description: Plate-shaped or irregular fibrous aggregates, white, grayish-white, transparent or translucent. Longitudinally surface with fibrous striations, silky lustrous. Odor, slight; taste, weak.

Microscopic identification:
1. **Transverse section:** Under the polarized microscope, thin slices colorless and transparent, the crystals fibrous or columnar.
2. **Powder:** The shape of crystals neat and dense.

Identification:
1. Check crystal water: Take 2.0 g of sample in a test tube covered with a pored cork stopper, heat, the sample turns to opaque and the moisture is produced on the tube wall.
2. Check calcium salt: Take 0.2 g of powdered sample, add 10 mL of dilute hydrochloric acid, heat to dissolve, add ammonium oxalate solution, a white precipitate is produced and soluble in hydrochloric acid but acetic acid.
3. Check sulfate salt: Take 0.2 g of powdered sample, add 10 mL of dilute hydrochloric acid, heat to dissolve, add a solution of barium chloride, a white precipitate is produced and soluble in sodium acetate but hydrochloric acid or nitric acid. (General rule 2001)

Assay:
1. Hydrous calcium sulfate ($CaSO_4 \cdot 2H_2O$):
   Weigh accurately 0.2 g of powdered sample, transfer into a conical flask, add 10 mL of dilute hydrochloric acid, heat to dissolve, add 100 mL of water and 1 drop of methyl red, add dropwisely potassium hydroxide until the color turns to pale yellow, then add an excess of 5 mL of potassium hydroxide, add a small quantity of calcein indicator, titrate with disodium edentate (0.05 M) until the yellowish-green fluorescence disappears and the color turns to orange. Each mL of disodium edentate (0.05 M) is equivalent to 8.608 mg of hydrous calcium sulfate ($CaSO_4 \cdot 2H_2O$).

Impurities and other requirements:
1. Total heavy metals: Not more than 20.0 ppm (General rule 3005).
2. Arsenic (As): Not more than 2.0 ppm (General rule 3006, 3049, 3050).

Storage: Store in a cool and dry place, and protect from moisture.
Usage: Heat-clearing and fire-purging medicinal.
Dosage: 15~60 g, decocted earlier, and unprocessed one for oral administration.

HAEMATITUM
代赭石
Dai Jhe Shih / Dai Zhe Shi
Hematite

Hematite is a mineral of oxides of corundum group, containing mainly ferric oxide (Fe_2O_3), commonly known as "Zhe Shi".

Description: Irregular flattened masses, dark brownish-red or grayish-black; streak cherry-red or reddish-brown, some with metal luster. Externally with many nailhead-like bulges, the hollows of the some size corresponding in position to nailhead-like bulges present on the bottom. Nailhead-like bulges reniform. The side fracture layer stratification. Texture hard and fragile, uneasily broken, sticky after crashing. Odor, slight; taste, weak.

Identification:
1. Take 0.1 g of powdered sample in a tube, add 2 mL of hydrochloric acid, shake and stand. Apply 2 drops of supernatant, add 1~2 drops of potassium ferrocyanide solution (potassium ferrocyanide/ H_2O TS), a blue precipitate is produced, and add 5~6 drops of 25% sodium hydroxide in the precipitate, the color turns to brown.

Storage: Protect from dust.
Usage: Liver-pacifying and wind-extinguishing medicinal.
Dosage: 9~30 g.
Precaution and warning: Used with caution in pregnancy.

HALIOTIDIS CONCHA
石決明
Shih Jyue Ming / Shi Jue Ming
Sea-ear Shell

Sea-ear shell is the dried shell of *Haliotis diversicolor* Reeve, *Haliotis discus hannai* Ino, *Haliotis ovina* Gmelin, *Haliotis ruber* Leach, *Haliotis asinina* L. or *Haliotis laevigata* Donovan (Fam. Haliotidae).

Description:

1. Shell of *Haliotis diversicolor*: Elongate ovate, inner side slightly ear-like; 7~9 cm in length, 5~6 cm in width, about 2 cm in height. The outer surface grayish-brown, with many irregular spiral ribs and fine dense growth lines; the spire small, the shell body large; more than 20 tubercular protuberances arranged towards right from the apex of the spire part, the terminal 6~9 protuberances with an opening on the same level with the shell surface, commonly known as "Jiou Kung Bau" or "Jiou Kung Shi Jue Ming". The inner surface smooth, with a pearl-like luster. The shell relatively thick, texture hard, uneasily broken, fracture 0.5~10 mm thick, obvious laminated. Odorless; taste, slightly salty.
2. Shell of *Haliotis discus hannai*: Oblong, 8~12 cm in length, 6~8 cm in width, 2~3 cm in height. The outer surface grayish-brown, with many rough and irregular wrinkles, growth lines distinct, usually with attachments of bryozoans or spirorbis, more than 20 tubercular protuberances arranged at the margin, the terminal 3~5 protuberances with an opening above the shell surface. The shell relatively thin, fracture 0.5~5 mm thick, obvious laminated.
3. Shell of *Haliotis ovina*: Subrounded, 4~8 cm in length, 2.5~6 cm in width, 0.8~2 cm in height. The outer surface grayish-green or brown, with yellowish-white maculations. The umbo close to the mid-portion and higher than the surface of shell, the spire and the shell body each occupying about one half of the shell surface, the border of the spire bearing 2 rows of neat protuberances, more conspicuous at the upper part, the terminal 4~5 protuberances with tubiform openings.
4. Shell of *Haliotis ruber*: Flat ovate, 13~17 cm in length, 11~14 cm in width, 3.5~6 cm in height. The outer surface brick-red, the spire occupying about one half of the shell surface, the spiral ribs and growth lines wavy ridged with more than 30 tubercular protuberances, the terminal 7~9 protuberances with an opening above the shell surface.
5. Shell of *Haliotis asinina*: Long and narrow, slightly twisted, auricular, 5~8 cm in length, 2.5~3.5 cm in width, about 1 cm in height. The outer surface smooth, with maculations of jade green, purple, brown color, etc.; the spire small, the shell body large; the terminal 5~7 protuberances with an opening on the same level with the shell surface, mostly ellipsoidal. The shell thin, texture relatively fragile.
6. Shell of *Haliotis laevigata*: Ovate, 11~14 cm in length, 8.5~11 cm in width, 1~6.5 cm in height. The outer surface brick-red, smooth, the umbo higher than the shell surface, growth lines relatively conspicuous; the spire occupying about one third of the shell surface, with more than 30 tubercular protuberances, the terminal 9 protuberances with an opening on the same level with the shell surface.

Microscopic identification:

1. **Transverse section:**
   (1) Shell of *Haliotis diversicolor*: The ground slices and powder contain cylindrical fiber structures, strip-shaped in longitudinal view, irregularly rounded or polygonal in sectional view, 10~100 μm in diameter. Pearl structures composed of irregularly rounded and small aragonite plates, stacking into parallelly lamellar pieces. The powder pale brown, bright red or white, containing moss green fluorescence. Numerous granules snow white and bright red colors, arranged alternately, composing to coral-shaped masses, dark yellow, orange-yellow or blackish-purple granules involved.
   (2) Shell of *Haliotis discus hannai*: The ground slices and powder contain cylindrical fiber structures, strip-shaped in longitudinal view, rounded or polygonal in sectional view, 10~30 μm in diameter. Pearl structures composed of ovate or square-rounded or irregular small aragonite plates, stacking into parallelly lamellar pieces. The powder pale pink like petals, purplish-red or white, containing orange-yellow fluorescence. Numerous granules white and pale pink like petals colors, arranged alternately, composing to coral-shaped pellets, purplish-red pearl texture granules involved.

Identification:

1. Take each 5.0 g of powdered sample of *Haliotis diversicolor* and *Haliotis discus hannai* in test tubes, add 25 mL of distilled water, mix well, take each 1 mL to small test tubes, add 2~3 drops of saturated solution of zinc acetate dihydrate, examine under ultraviolet light at 365 nm, a glass green fluorescence is produced for *Haliotis diversicolor* and a pale yellowish-green fluorescence for *Haliotis discus hannai*.

Impurities and other requirements:

1. Loss on drying: Not more than 3.0% under heating at 105℃ for 5 hours (General rule 5008).
2. Acid-insoluble ash: Not more than 10.0% (General rule 5004).

Storage: Store in a ventilated and dry place and preserve in a well-closed container.

Usage: Liver-pacifying and wind-extinguishing medicinal.

Dosage: 5~30 g, decocted earlier.

HEDYOTIDIS DIFFUSAE HERBA
白花蛇舌草
Bai Hua She She Cao / Bai Hua She She Cao
Spreading Hedyotis Herb

Spreading hedyotis herb is the dried herb of *Hedyotis diffusa* Willd. (Fam. Rubiaceae).

Description: Usually winded into masses, varying in length, grayish-green or grayish-brown, main root curved, 1~3 mm in diameter, numerous fibrous roots. Stem slender, slightly compressed, branched at the base. Leaves opposite, sessile, mostly crumpled; slat-shaped or slat-shaped lanceolate as whole, 1~3 cm in length, 1~3 mm in width, apex acute, margin slightly curved inwards, stipules with 1~4 toothed at the apex. Capsule solitary or opposite in leaf axis, compressed-globose, 2~2.5 mm in diameter, loculicidal dehiscence. Calyx persistent, 4-lobed at the upper part, margin with short and setose hairs. Odor, slight; taste, weak.

Microscopic identification:

1. **Transverse section:**
   (1) Stem: Epidermis composed of 1 layer of subsquare or ovate cells, individual cell usually intensely protuberant to outward, covered with cuticle, occasionally slightly sunken stomata present. Cortex relatively narrow, the cells generally smaller than epidermal cells, containing few small oil droplets, individual cell contains raphides of calcium oxalate, the crystals usually arranged along axis; usually densely dotted in sectional view. Endodermis composed of 1 layer of cells, the cells larger than cortex cells, tangentially prolate, 17~25 μm in width, 17~30 μm in length. Phloem narrow, about 2~5 layers of cells. Xylem in a ring, vessels usually 2~6 arranged radially in single rows or individual scattered, the large vessels 30~41 μm in diameter; xylem fibers arranged radially, walls thickened and lignified; rays composed of 1 layer of cells, walls relatively thinned and slightly lignified. Pith broad, the cells relatively large, raphides of calcium oxalate and few starch granules also exist.

Storage: Refrigerate or store in a cool and dry place.
Usage: Heat-clearing medicinal (Heat-clearing and detoxcating medicinal).
Dosage: 15~60 g.

HEDYSARI RADIX
紅耆
Hong Ci / Hong Qi
Hedysarum Root

Hedysarum root is the dried root of *Hedysarum polybotrys* Hand.-Mazz. (Fam. Leguminosae).
It contains not less than 33.0% of dilute ethanol-soluble extractives and not less than 27.0% of water extractives.

Description: Cylindrical, 10~50 cm in length, 0.8~2 cm diameter. Externally reddish-brown, with longitudinal wrinkles and yellow lenticels, cork easily exfoliated, wood and fibers exposed. Texture hard and tenacious, fracture fibrous, starchy, bark pale brown, occupying 1/3~1/2 of cross section, cambium ring brownish, wood pale yellowish-brown, with radial rays. Odor, slight; taste sweetish. Sliced pieces oblique, about 1 mm thick, fracture with radial striations and distinct cambium ring.

Microscopic identification:

1. **Transverse section:** Cork composed of 6~8 rows of square cells, pale yellow, occasionally fallen off. Cortex composed of several layers of parenchymatous cells, subsquare or polygonal, with distinct intercellular spaces. Phloem composed of fiber bundles, parenchymatous cells and sieve tubes. Phloem fiber bundles subsquare, subrounded or irregular in shape, surrounded by prisms of calcium oxalate, forming crystal fibers. Parenchymatous cells of phloem polygonal or subsquare, with distinct intercellular spaces, containing abundant starch granules. Cambium in a ring. Xylem composed of fiber bundles, parenchymatous cells, vessels and ray cells. Xylem fiber bundles subsquare, subrounded or polygonal, with wall thickened and slightly lignified, surrounded by prisms of calcium oxalate, forming crystal fibers. Xylem parenchymatous cells subrounded or subsquare, containing abundant starch granules. Vessels mainly bordered-pitted, reticulate occasionally visible, singly scattered or several linked, 70~130 μm in diameter.
2. **Powder:** Yellowish-brown. Fibers mostly in bundles, occasionally scattered, with walls thickened and slightly lignified, 5~20 μm in diameter, surrounded by prisms of calcium oxalate, forming crystal fibers. Vessels mainly bordered-pitted, reticulate occasionally visible, 70~130 μm in diameter. Starch granules mostly simple, compound granules composed of 2~6 components occasionally found, oval or subrounded, 2~20 μm in diameter. Prisms of calcium oxalate about 20 μm in length and 7~15 μm in diameter.

Thin layer chromatographic identification test (General rule 1010.3):

1. Sample solution: Add 2.0 g of powdered sample to 15 mL of methanol, ultrasonicate for 30 minutes, filter and use the filtrate.
2. Reference drug solution: Use 2.0 g of the reference drug as the same method described above.
3. Reference standard solution: Weigh accurately 1.0 mg of formononetin and dissolve in 70% methanol to produce a 10.0 mL solution.
4. Procedure: Use silica gel F_{254} as the coating substance and a solution of dichloromethane, methanol and ammonia solution (12:4:1) as the developing solvent. Apply 5 μL of each of the above solutions to the plate. Once the top of the solvent rise to about 5~10 cm from the origin, dry in air. Examine under the ultraviolet light at 254 nm. The spots in the chromatogram obtained from the sample solution correspond in R_f values and color to the spots in the chromatogram obtained from the reference drug solution and the reference standard solution.

Impurities and other requirements:

1. Loss on drying: Not more than 15.0% under heating at 105℃ for 5 hours (General rule 5008).
2. Total ash: Not more than 6.0% (General rule 5004).
3. Acid-insoluble ash: Not more than 1.0% (General rule 5004).
4. Total heavy metals: Not more than 10.0 ppm (General rule 3005).
5. Cadmium (Cd): Not more than 0.3 ppm (General rule 3049, 3050).
6. Lead (Pb): Not more than 5.0 ppm (General rule 3007, 3049, 3050).
7. Mercury (Hg): Not more than 0.2 ppm (General rule 3049).
8. Arsenic (As): Not more than 2.0 ppm (General rule 3006, 3049, 3050).
9. Copper (Cu): Not more than 20.0 ppm (General rule 3049).
10. Pesticide residues:
    (1) The total DDT content: Not more than 1.0 ppm (General rule 3052).
    (2) The total BHC content: Not more than 0.9 ppm (General rule 3052).
    (3) The total PCNB content: Not more than 1.0 ppm (General rule 3052).
11. Aflatoxins: Not more than 15.0 ppb (General rule 3053).

Assay:

1. Water extractives: Carry out the method for determination of water extractives (General rule 5006).
2. Dilute ethanol extractives: Carry out the method for determination of dilute ethanol-soluble extractives (General rule 5006).

Storage: Store in a cool and dry place, and protect from moisture and insects.
Usage: Tonifying and replenishing medicinal.
Dosage: 9~30 g.

HIRUDO
水蛭
Shuei Jhih / Shui Zhi
Leech

Leech is the dried body of *Whitmania pigra* Whitman, *Hirudo nipponica* Whitman or *Whitmania acranulata* Whitman (Fam. Hirudinidae).
It contains not less than 10.0% of dilute ethanol-soluble extractives and not less than 15.0% of water extractives.

Description:

1. Body of *Whitmania pigra*: Flattened fusiform, slightly curved, 4~10 cm in length, 0.8~2 cm in width, with numerous segments. The anterior sucker inconspicuous, the posterior sucker relatively larger; dorsal side slightly convex, blackish-brown, with 5 longitudinal black stripes; ventral side even, brownish-yellow. Texture fragile, easily broken, fracture lustrous, gelatinous. Odor, slightly stinking.
2. Body of *Hirudo nipponica*: Flattened cylindrical, usually curved and twisted, 2~5 cm in length, 2~3 mm in width.
3. Body of *Whitmania acranulata*: Narrow and flattened, 5~12 cm in length, 1~5 mm in width.

Thin layer chromatographic identification test (General rule 1010.3):

1. Sample solution: Add 1.0 g of powdered sample to 5 mL of ethanol, ultrasonicate for 15 minutes, filter and use the filtrate.
2. Reference drug solution: Use 1.0 g of the reference drug as the same method described above.
3. Procedure: Use silica gel F_{254} as the coating substance and a solution of cyclohexane, ethyl acetate (4:1) as the developing solvent. Apply 5 μL of each of the above solutions to the plate. Once the top of the solvent rise to about 5~10 cm from the origin, dry in air. Spray with a 10% solution of sulfuric acid in ethanol (H_2SO_4/EtOH TS) and heat at 105℃ until the spots become visible. Examine under visible light and ultraviolet light at 365 nm. The spots in the chromatogram obtained from the sample solution correspond in R_f values and color to the spots in the chromatogram obtained from the reference drug solution.

Impurities and other requirements:

1. Loss on drying: Not more than 15.0% under heating at 105℃ for 5 hours (General rule 5008).
2. Total ash: Not more than 10.0% (General rule 5004).

3. Acid-insoluble ash: Not more than 3.0% (General rule 5004).

Assay:
1. Water extractives: Carry out the method for determination of water extractives (General rule 5006).
2. Dilute ethanol extractives: Carry out the method for determination of dilute ethanol-soluble extractives (General rule 5006).

Storage: Refrigerate or store in a cool and dry place, and protect from moisture and insects.
Usage: Blood-regulating medicinal (Blood-activating and stasis-dispelling medicinal).
Dosage: 1.5~3 g.
Precaution and warning: Contraindicated in pregnancy.

HOMALOMENAE RHIZOMA
千年健
Cian Nian Jian / Qian Nian Jian
Obscured Homalomena Rhizome

Obscured homalomena rhizome is the dried rhizome of *Homalomena occulta* (Lour.) Schott (Fam. Araceae).
It contains not less than 8.0% of dilute ethanol-soluble extractives and not less than 10.0% of water extractives.

Description: Cylindrical or slightly cured and compressed, 15~40 cm in length, 0.8~2 cm in diameter. Externally reddish-brown or yellowish-brown, rough, with mostly twisted longitudinal furrows arranged in a row and yellowish-white fiber bundles. Texture fragile, fracture with reddish-brown spots, scattered with numerous yellow fiber bundles and round lustrous oil dots. Odor, aromatic; taste, pungent and slight bitter.

Microscopic identification:
1. **Transverse section:** Cork mostly removed. Secretory tissue mostly contains reddish-brown or pale brown masses. Clusters of calcium oxalate scattered. Mucilage cells relatively large, containing raphides of calcium oxalate. Vascular bundles scattered, collateral or amphivasal; large fiber bundles existed outside collateral vascular bundles, pale yellow, wall thickened and lignified, occasionally with pits. Oil cavities numerous and large, 180~375 μm in diameter, surrounded by 4~5 layers of cells with suberized walls.

Thin layer chromatographic identification test (General rule 1010.3):
1. Sample solution: Add 1.0 g of powdered sample to 20 mL of petroleum ether (30~60℃), ultrasonicate for 20 minutes, cool and filter. Evaporate the filtrate to dryness, and dissolve the residue in 1 mL of methanol.
2. Reference drug solution: Use 1.0 g of the reference drug as the same method described above.
3. Procedure: Use silica gel F_{254} as the coating substance and a solution of cyclohexane and ethyl acetate (8:2) as the developing solvent. Apply 5 μL of each of the above solutions to the plate. Once the top of the solvent rise to about 5~10 cm from the origin, dry in air, spray with a 10% solution of sulfuric acid in ethanol (H_2SO_4/EtOH TS), heat at 105℃ for 2 minutes until the spots become visible, and examine under visible light. The spots in the chromatogram obtained from the sample solution correspond in R_f values and color to the spots in the chromatogram obtained from the reference drug solution.

Impurities and other requirements:
1. Loss on drying: Not more than 13.0% under heating at 105℃ for 5 hours (General rule 5008).
2. Total ash: Not more than 7.0% (General rule 5004).
3. Acid-insoluble ash: Not more than 1.0% (General rule 5004).

Assay:
1. Water extractives: Carry out the method for determination of water extractives (General rule 5006).
2. Dilute ethanol extractives: Carry out the method for determination of dilute ethanol-soluble extractives (General rule 5006).

Storage: Store in a cool and dry place.
Usage: Wind-dampness-dispelling medicinal.
Dosage: 4.5~9 g.

HORDEI GERMINATUS FRUCTUS
麥芽
Mai Ya / Mai Ya
Germinated Barley

Germinated barley is the dried and germinated ripe caryopsis of *Hordeum vulgare* L. (Fam. Gramineae).
It contains not less than 8.0% of dilute ethanol-soluble extractives and not less than 10.0% of water extractives.

Description: Fusiform, both sides acute, center obtuse, 9~15 mm in length, 2.5~3.5 mm in diameter. Externally pale yellow or yellowish-brown, base of the radicle grown with budlet and the fibrous root; budlet about 4 mm in length, yellowish-brown or yellowish-white, linear and soft; fibrous root about 2~20 mm in length, slender and curved; dorsally enveloped in lemma, 5 veined, with a long awn broken or fallen; ventrally subtended by palea. Texture hard, fracture white, starchy. Odor, slight; taste slightly sweet.

Microscopic identification:
1. **Transverse section:** Lemma and palea located at outermost layer of caryopsis, external showing sclerenchymatous cells, the base usually with

non-glandular hairs; internal showing parenchymatous cells. Inside pericarp showing testa, composed of parenchymatous cells. Endosperm located inside testa, composed of 2~4 layers of sclerenchymatous cells, filled with starch granules. Embryo composed of parenchymatous cells, germ grown upward, radical grown downward.

2. **Powder:** Pale yellow or beige. Epidermal cells moniliform, with vascular bundles. Endocarp filled with abundant starch granules, elliptical or subrounded, about 8~30 μm in diameter, hilum V-shaped or slit-shaped.

Thin layer chromatographic identification test (General rule 1010.3):

1. Sample solution: Add 1.0 g of powdered sample to 2 mL of dilute hydrochloric acid and 30 mL of ethyl acetate, ultrasonicate for 1 hour, cool, filter, evaporate the filtrate to dryness and dissolve the residue in 1 mL of methanol.
2. Reference drug solution: Use 1.0 g of the reference drug as the same method described above.
3. Procedure: Use silica gel F_{254} as the coating substance and a solution of toluene, ethyl acetate and formic acid (10:3:0.5) as the developing solvent. Apply 5 μL of each of the above solutions to the plate. Once the top of the solvent rise to about 5~10 cm from the origin, dry in air. Spray with a solution of α-naphthol in methanol (α-Naphthol/MeOH TS) and heat at 105℃ for 2 minutes until the spots become visible. Examine under the visible light. The spots in the chromatogram obtained from the sample solution correspond in R_f values and color to the spots in the chromatogram obtained from the reference drug solution.

Impurities and other requirements:

1. Loss on drying: Not more than 13.0% under heating at 105℃ for 5 hours (General rule 5008).
2. Total ash: Not more than 6.0% (General rule 5004).
3. Acid-insoluble ash: Not more than 2.0% (General rule 5004).
4. Budding rate: Not less than 85.0%. Take 10.0 g of sample in two portions diagonally (General rule 5001), calculate the percentage of the amount of the budding grains and of the total grains.

Assay:

1. Water extractives: Carry out the method for determination of water extractives (General rule 5006).
2. Dilute ethanol extractives: Carry out the method for determination of dilute ethanol-soluble extractives (General rule 5006).

Storage: Store in a cool and dry place, and protect from moisture and insects.

Usage: Disgestant medicinal.
Dosage: 10~15 g. Take 60 g fried Hordei Germinatus Fructus for lactifuge.

HOUTTUYNIAE HERBA
魚腥草
Yu Sing Cao / Yu Xing Cao
Heartleaf Houttuynia Herb

Heartleaf houttuynia herb is the dried herb in flowering of *Houttuynia cordata* Thunb. (Fam. Saururaceae).
It contains not less than 4.0% of dilute ethanol-soluble extractives and not less than 8.0% of water extractives.

Description: Stems flat-cylindrical, twisted, 20~35 cm in length, 2~3 mm in diameter; externally yellowish-brown or dark brown, with several longitudinal ridges and distinct nodes, nodes in the lower with adventitious root; texture fragile and easily broken. Leaves alternate, rolled and crumpled, cordate or broadly ovate as whole, 3~6 cm in length, 3~5 cm in width, apex acuminate, margin entire; the upper surface dark yellowish-green to dark brown, the lower surface grayish-green or grayish-brown; petioles slender, accreted with stipule at the base, forming a sheath. Spike terminal, yellowish-brown. Odor, fishy; taste, slightly astringent.

Microscopic identification:

1. **Transverse section:**
   (1) Stem: Epidermis composed of 1 layer of square cells, outer walls slightly thickened. Outside cortex showing 1 layer of large parenchymatous cells arranging in order, scattered with oil cells; inside showing 1 layer of subrounded small parenchymatous cells arranging densely; inside showing cortex with thin walls, cells varying in shape, arranging sparsely, with numerous intercellular spaces. Pericycle fibers 1~2 layers, arranging in a ring, lignified, with extremely thickened walls and small lumens. Vascular bundles arranged in a ring; phloem distinct; vessels mainly spiral and reticulate, 20~50 μm in diameter. Pith broad, scattered with oil cells and clusters of calcium oxalate.
   (2) Leaf: Upper and lower epidermal cells polygonal, with densely undulated striations; stomata with 4~6 subsidiary cells; oil cells scattered, subrounded, 66~80 μm in diameter, surrounded by 6~7 epidermal cells arranging in a ring. Glandular hairs without stalk, the head 3~4 cells, containing pale brown contents, apical cells usually without secretions, occasionally shrunken; non-glandular hairs in vein 2~4 cells, with striations on the surface. Stomata distributed densely in lower epidermis; non-glandular hairs slightly numerous. Parenchymatous cells in mesophyll occasionally contain

clusters of calcium oxalate, 6~16 μm in diameter.

Thin layer chromatographic identification test (General rule 1010.3):

1. Sample solution: Add 5.0 g of powdered sample to 50 mL of methanol, ultrasonicate for 30 minutes, stand, filter and use the filtrate.
2. Reference drug solution: Use 5.0 g of the reference drug as the same method described above.
3. Procedure: Use silica gel F_{254} as the coating substance and a solution of *n*-hexane and ethyl acetate (9:1) as the developing solvent. Apply 5 μL of each of the above solutions to the plate. Once the top of the solvent rise to about 5~10 cm from the origin, dry in air. Spray with a solution of dinitrophenylhydrazine until the spots become visible. The spots in the chromatogram obtained from the sample solution correspond in R_f values and color to the spots in the chromatogram obtained from the reference drug solution.

Impurities and other requirements:

1. Total ash: Not more than 16.0% (General rule 5004).
2. Acid-insoluble ash: Not more than 2.5% (General rule 5004).

Assay:

1. Water extractives: Carry out the method for determination of water extractives (General rule 5006).
2. Dilute ethanol extractives: Carry out the method for determination of dilute ethanol-soluble extractives (General rule 5006).

Storage: Refrigerate or store in a dry place, and protect from insects.
Usage: Heat-clearing medicinal (Heat-clearing and detoxcating medicinal).
Dosage: 10~30 g, not decocted for a long time and used double dosage of fresh one.

IMPERATAE RHIZOMA
白茅根
Bai Mao Gen / Bai Mao Gen
Lalang Grass Rhizome

Lalang grass rhizome is the dried rhizome of *Imperata cylindrica* (L.) Beauv. var. *major* (Nees) C. E. Hubb. (Fam. Gramineae).
It contains not less than 17.0% of dilute ethanol-soluble extractives and not less than 18.0% of water extractives.

Description: Slender and long cylindrical, branched, varying in length, 30~60 cm in length, 0.2~0.5 cm in diameter. Externally pale yellow, lustrous, with longitudinally wrinkles, varying in color, nodes distinct and slightly protuberant, internodes varying in length, usually 1.5~3 cm in length, remained with scale leaves. Texture light, tenacious, fracture white in bark, with cracks arranged radially, stele pale yellow, with a pore in the center, easily stripped from cortex. Odor, slight; taste, slightly sweetish.

Microscopic identification:

1. **Transverse section:** Epidermis composed of 1 layer of subsquare small cells, occasionally containing silica bodies. Hypodermal fibers in 1~4 rows, walls thickened and lignified. Cortex relatively broad, composed of more than 10 rows of parenchymatous cells, scattered with 10 or more vascular bundles in closed collateral type, surrounded by fibers of vascular bundle sheath accompanied by clefts. Endodermal cells thickened at inner walls, some cells containing silica bodies. Pericycle composed of 1~2 layers of sclerenchyma cells, vascular bundles scattered in stele, surrounded by fibers of vascular bundles. Central part often hollowed.
2. **Powder:** Yellowish-white. Epidermal cells arranged parallelly, each row composed of one long cell alternated with two short cells, occasionally one short cell existed between two long cells, hypodermal fibers usually with transverse septa, containing oblique pits. Cortex cells subrectangular, thinned at one side walls and easily broken, thickened at the other side walls with striations and pits, also with silica bodies. Sclerenchyma cells of pericycle subrectangular; pericycle cells stone cell-shaped at the nodes of rhizome. Vessels mainly bordered-pitted and pitted, annular vessels rarely present.

Thin layer chromatographic identification test (General rule 1010.3):

1. Sample solution: Add 2.5 g of powdered sample to 10 mL of ethanol, ultrasonicate for 1 hour, filter and evaporate to 5 mL.
2. Reference drug solution: Use 2.5 g of the reference drug as the same method described above.
3. Procedure: Use silica gel F_{254} as the coating substance and a solution of *n*-hexane and ethyl acetate (4:1) as the developing solvent. Apply 10 μL of each of the above solutions to the plate. Once the top of the solvent rise to about 5~10 cm from the origin, dry in air. Examine under ultraviolet light at 365 nm. The spots in the chromatogram obtained from the sample solution correspond in R_f values and color to the spots in the chromatogram obtained from the reference drug solution.

Impurities and other requirements:

1. Loss on drying: Not more than 11.0% under heating at 105℃ for 5 hours (General rule 5008).
2. Total ash: Not more than 6.0% (General rule 5004).

3. Acid-insoluble ash: Not more than 3.0% (General rule 5004).
4. Total heavy metals: Not more than 10.0 ppm (General rule 3005).
5. Arsenic (As): Not more than 5.0 ppm (General rule 3006, 3049, 3050).

Assay:
1. Water extractives: Carry out the method for determination of water extractives (General rule 5006).
2. Dilute ethanol extractives: Carry out the method for determination of dilute ethanol-soluble extractives (General rule 5006).

Storage: Refrigerate or store in a dry place, and protect from mold and insects.
Usage: Hemostatic medicinal.
Dosage: 9~30 g.

INULAE FLOS
旋覆花
Syuan Fu Hua / Xuan Fu Hua
Inula Flower

Inula flower is the dried capitulum of *Inula japonica* Thunb. or *Inula britannica* L. (Fam. Compositae).
It contains not less than 8.0% of dilute ethanol-soluble extractives and not less than 8.0% of water extractives.

Description: Spheroidal or oblate, 1~2 cm in diameter, loose. Involucre semisphere, consisting of five layers of bracts, outer bracts foliaceous and longer or upper part foliaceous and lower part coriaceous; inner bracts membranous. Sometimes pedicels remaining at the base of involucre, surfaces of the bracts and pedicel covered with white tomenta. Ligulate florets 1 row, yellow, about 1 cm in length, strip-shaped, mostly rolled, with 3 terminal teeth; tubular florets numerous, brownish-yellow, about 5 mm in length, with 5 terminal teeth; at the apex of ovary scattered with a row white pappi. Texture light, easily broken and separated. Odor, slight; taste, bitter.

Microscopic identification:
1. **Transverse section:**
   (1) In surface view: Non-glandular hairs of bracts 1~8 cells, base of the multicellular ones large, and the apical cells very long; 2~3 cells seriate non-glandular hairs located in inner layers of bracts. Pappi composed of multiseriate non-glandular hairs, margin cells slightly convex. Epidermal cells of ovary contain columnar crystals of calcium oxalate, up to about 48 μm in length, 2~5 μm in diameter; non-glandular hairs of ovary biseriated, one row unicellular and the other usually bicellular, 90~220 μm in length. Glandular hairs consist in the surface of bracts and corolla, clavate, with a multicellular head, mostly biseriate, surrounded by bursa of cutin, with a multicellular stalk, biseriated. Pollen grains subspheroidal, 22~33 μm in diameter, the outer wall with spiny, about 3 μm in length, with 3 germinal pores.
2. **Powder:** Golden-yellow. Epidermal cells of bracts with walls thickened, the base densely covered with non-glandular hairs, about 300 μm in length, composed of 3~4 parenchymatous cells. Pappi mostly composed of several sclerenchymatous cells, cells slender, walls slightly thickened, the apex acute. Epidermal cells of stigma villiform protuberance, the fragments of stigma and ovary pale brownish-yellow, filled with columnar crystals of calcium oxalate, 25~40 μm in length. Glandular hairs with a multicellular head, elongated-elliptical, 120 μm in length, containing oil droplets. Pollen grains subrounded, 24 μm in diameter, the outer wall with spiny protuberance, with 3 germinal pores.

Thin layer chromatographic identification test (General rule 1010.3):
1. Sample solution: Add 1.0 g of powdered sample to 10 mL of methanol, shake for 5 minutes, stand, filter and use the filtrate.
2. Reference drug solution: Use 1.0 g of the reference drug as the same method described above.
3. Procedure: Use silica gel F_{254} as the coating substance and a solution of *n*-hexane and ethyl acetate (3:2) as the developing solvent. Apply 5 μL of each of the above solutions to the plate. Once the top of the solvent rise to about 5~10 cm from the origin, dry in air. Spray with a solution of *p*-anisaldehyde in sulfuric acid (*p*-Anisaldehyde/H_2SO_4 TS) and heat at 105℃ until the spots become visible. The spots in the chromatogram obtained from the sample solution correspond in R_f values and color to the spots in the chromatogram obtained from the reference drug solution.

Impurities and other requirements:
1. Loss on drying: Not more than 15.0% under heating at 105℃ for 5 hours (General rule 5008).
2. Total ash: Not more than 14.0% (General rule 5004).
3. Acid-insoluble ash: Not more than 4.0% (General rule 5004).

Assay:
1. Water extractives: Carry out the method for determination of water extractives (General rule 5006).
2. Dilute ethanol extractives: Carry out the method for determination of dilute ethanol-soluble extractives (General rule 5006).

Storage: Store in a dry place, and protect from moisture.
Usage: Phlegm-dispelling, cough-suppressing and panting-calming medicinal.
Dosage: 3~10 g, wrap-boiled in decoction.

ISATIDIS FOLIUM
大青葉
Da Cing Ye / Da Qing Ye
Indigowoad Leaf

Indigowoad leaf is the dried leaf of *Isatis indigotica* Fort. (Fam. Cruciferae).
It contains not less than 8.0% of dilute ethanol-soluble extractives, not less than 10.0% of water extractives and not less than 0.02% of indirubin.

Description: Mostly crumpled, occasionally broken, oblong-oblanceolate or oblong as whole, 5~20 cm in length, 2~6 cm in width, margin entire or slightly undulate, dark brownish-green, base attenuate and decurrent into the petiole appearing wing-shaped, petioles 4~10 cm in length. Texture fragile, easily broken. Odor, aromatic; taste, slightly sour, bitter and astringent.

Microscopic identification:

1. **Transverse section**: Upper epidermis covered with cuticle. Palisade tissue indistinct and slightly oblong in shape. Vascular bundles collateral, 3~7 in number. Secretory cells containing myrosinase occurred in parenchymatous tissue of mesophyll and midrib, cells suborbicular, 10~40 μm in diameter, smaller than parenchymatous cells. Pigment bodies brownish-black, scattered in the secretory cells. In surface view, upper epidermal cells covered with cuticle, anticlinal walls straight; anticlinal walls of lower epidermal cells slightly sinuous and moniliform. Stomata anomocytic, with 3~4 subsidiary cells, present in both upper and lower epidermis.
2. **Powder:** Dark grayish-brown. Epidermal cells elongated-polygonal, subrectangular, subsquare or long strip-shaped in surface view, anticlinal walls relatively straight or slightly curved, moniliform thickened; lower epidermal cells with more stomata, anisocytic, with 3~4 subsidiary cells, occasionally 2~3 stomata aggregated with same subsidiary cells. Collenchymatous cells long strip-shaped in longitudinal view, up to 14 μm thick at the corner. Indigo crystals blue, existing in mesophyll cells, occasionally found in epidermal cells, fine granular-shaped or flaky, usually aggregated. Hesperidin-like crystals existed in mesophyll or epidermal cells, subrounded or irregular in shape, occasionally clustered needle-like, 3~22 μm in diameter. Reticulate and spiral vessels 7~54 μm in diameter.

Thin layer chromatographic identification test (General rule 1010.3):

1. Sample solution: Add 0.5 g of powdered sample to 20 mL of chloroform, heat under reflux for 1 hour, filter, and evaporate the filtrate to 1 mL.
2. Reference drug solution: Use 0.5 g of the reference drug as the same method described above.
3. Reference standard solution: Weigh accurately a quantity of indigo and indirubin and dissolve in chloroform to produce a solution containing 1.0 mg per mL of each.
4. Procedure: Use silica gel F_{254} as the coating substance and a solution of benzene, chloroform, and acetone (5:4:1) as the developing solvent. Apply 5 μL of each of the above solutions to the plate. Once the top of the solvent rise to about 5~10 cm from the origin, dry in air. The spots in the chromatogram obtained from the sample solution correspond in R_f values and color to the spots in the chromatogram obtained from the reference drug solution and the reference standard solution.

Assay:

1. Indirubin:
   (1) Mobile phase: A solution of methanol and water (75:25). The ratio varies as required.
   (2) Reference standard solution: Weigh accurately a quantity of indirubin and dissolve in methanol to produce a solution containing 2 μg per mL of each.
   (3) Sample solution: Weigh accurately 0.25 g of powdered sample, transfer to a Soxhlet extractor, and add appropriate quantity of chloroform to macerate for 15 hours, heat under reflux to the extract colorless and the solvent to dryness, dissolve the residue in methanol and transfer to a 100-mL volumetric flask, add methanol to volume, mix well, filter and use the filtrate.
   (4) Chromatographic system: The liquid chromatography is equipped with an ultraviolet absorption photometer (wavelength: 289 nm) and a column packed with octadecylsilanized silica gel. The number of theoretical plates of the peak of indirubin should not be less than 4,000.
   (5) Procedure: Inject accurately 20 μL of each of the reference standard solution and the sample solution into the liquid chromatography apparatus, and calculate the content.
2. Water extractives: Carry out the method for determination of water extractives (General rule 5006).
3. Dilute ethanol extractives: Carry out the method for determination of dilute ethanol-soluble extractives (General rule 5006).

Storage: Refrigerate or store in a cool and dry place, and protect from mold.
Usage: Heat-clearing medicinal (Heat-clearing and detoxcating medicinal).
Dosage: 9~15 g.

ISATIDIS RADIX
北板藍根
Bei Ban Lan Gen / Bei Ban Lan Gen
Indigowoad Root

Indigowoad root is the dried root of *Isatis indigotica* Fort. (Fam. Cruciferae).

Description: Cylindrical, slightly tortuous, 10~20 cm in length, 0.5~1 cm in diameter. Externally pale grayish-yellow or pale brownish-yellow, with longitudinally wrinkles, transversely lenticels, and rootlet scars. Root stock slightly expanded, exhibiting dark green or dark brown petiole-bases arranged in whorls, and dense tubercles. Texture compact and soft, fracture yellowish-white in bark and yellow in wood. Odor, slight; taste, sweet then bitter and astringent.

Microscopic identification:

1. **Transverse section:** Cork composed of several layers of cells. Cortex narrow. Phloem broad, with distinct rays. Cambium present as a ring. Xylem vessels yellow, subrounded, about 80 μm in diameter; xylem fibers also exist. Parenchymatous cells contain starch granules.

Storage: Refrigerate or store in a cool and dry place, and protect from mold and insects.
Usage: Heat-clearing and detoxicating medicinal.
Dosage: 9~15 g.

JUJUBAE FRUCTUS
大棗
Da Zao / Da Zao
Jujube Fruit

Jujube fruit is the dried ripe fruit of *Ziziphus jujuba* Mill. (Fam. Rhammaceae).
It contains not less than 50.0% of dilute ethanol-soluble extractives and not less than 50.0% of water extractives.

Description: Ellipsoidal or spheroidal, 2~3.5 cm in length, 1.5~2.5 cm in diameter. Externally dark red or purplish-red, slightly lustrous, with irregular wrinkles. Apex dented, with a small protuberant scar of style; base dented, with a short fruit stalk or its round scar. Exocarp thin, mesocarp brownish-yellow or pale brown, fleshly, soft, sugary and oily. Kern fusiform, both ends acute. Texture hard. Odor, slightly aromatic; taste, sweet, viscous on chewing.

Microscopic identification:

1. **Transverse section:** The outermost layer of exocarp composed of tangentially elongated epidermal cells, lumen filled with brownish-red contents with granules, covered by 5~7.5 μm thick cuticles; inner side of epidermis composed of 4~6 layers of collenchymatous cells, usually containing colorless translucent masses. Mesocarp composed of subrounded parenchymatous cells, with large intercellular spaces, some cells mucilage cavity-shaped, scattered irregularly with small vascular bundles; parenchymatous cells contain granular masses, prisms and clusters of calcium oxalate.
2. **Powder:** Brownish-yellow. Parenchymatous cells of mesocarp contain prisms and clusters of calcium oxalate; prisms of calcium oxalate 3~50 μm in diameter; each cluster of calcium oxalate usually covered with cellulose membrane, 10~38 μm in diameter. Epidermal cells of exocarp brownish-red in surface view, rounded-polygonal, about 20 μm in diameter, the longer ones, up to 45 μm in diameter, mostly containing 1 to several subspheroidal granules. Occasionally with large anomocytic stomata, vessels mostly spiral, very small, 5~15 μm in diameter.

Thin layer chromatographic identification test (General rule 1010.3):

1. Sample solution: Add 2.0 g of powdered sample to 10 mL of petroleum ether (30~60℃), macerate for 10 minutes and ultrasonicate for 10 minutes, filter and discard the petroleum ether solution, dry the residue in air. Add 20 mL of ethyl ether, macerate for 1 hour, ultrasonicate for 15 minutes, filter and evaporate to 2 mL.
2. Reference drug solution: Use 2.0 g of the reference drug as the same method described above.
3. Reference standard solution: Weigh accurately a quantity of oleanolic acid and betulinic acid and dissolve in ethanol to produce a solution containing 1.0 mg per mL of each.
4. Procedure: Use silica gel F_{254} as the coating substance and a solution of toluene, ethyl acetate, and glacial acetic acid (14:4:0.5) as the developing solvent. Apply 10 μL of each of the sample solution and reference drug solution and 4 μL of the reference standard solution to the plate. Once the top of the solvent rise to about 5~10 cm from the origin, dry in air. Spray with a 10% solution of sulfuric acid in ethanol (H_2SO_4/EtOH TS) and heat until the spots become visible. Examine under visible light and ultraviolet light at 365 nm. The spots in the chromatogram obtained from the sample solution correspond in R_f values and color to the spots in the chromatogram obtained from the reference drug solution and the reference standard solution.

Impurities and other requirements:

1. Total ash: Not more than 2.0% (General rule 5004).
2. Acid-insoluble ash: Not more than 2.0% (General rule 5004).
3. Pesticide residues:
   (1) The total DDT content: Not more than 0.2 ppm (General rule 3052).
   (2) The total BHC content: Not more than 0.2 ppm (General rule 3052).
4. Aflatoxins: Not more than 15.0 ppb (General rule 3053).

Assay:

1. Water extractives: Carry out the method for determination of water extractives (General rule 5006).
2. Dilute ethanol extractives: Carry out the method for determination of dilute ethanol-soluble extractives (General rule 5006).

Storage: Refrigerate or store in a cool and dry place, and protect from mold and insects.
Usage: Tonifying and replenishing medicinal (Qi-tonifying medicinal).
Dosage: 6~30 g.

JUNCI MEDULLA
燈心草
Deng Sin Cao / Deng Xin Cao
Rush Pith

Rush pith is the dried pith in the stem of *Juncus effusus* L. (Fam. Juncaceae).
It contains not less than 2.0% of dilute ethanol-soluble extractives and not less than 2.0% of water extractives.

Description: Slender cylindrical, up to 90 cm in length, 0.1~0.3 cm in diameter. Externally white or pale yellowish-white, with raised fine longitudinal striations and spongy fine pores. Texture light and soft, slightly tenacious, easily broken, fracture white. Odorless; tasteless.

Microscopic identification:

1. **Transverse section:** All composed of ventilate parenchyma tissue. The parenchymatous cells stellate in shape, with several branches, 8~60 μm in length, 7~20 μm in diameter, wall about 1.7 μm thick, each cell branch is connected with branches of other stellate cells to form air cavities, mostly in triangular shape, occasionally subquadrilateral.
2. **Powder:** Off-white. All composed of stellate parenchymatous cells, connected with branches of other stellate cells to form air cavities mostly in large triangular shape or subquadrilateral, branches 4~8, 5~51 μm in length, 5~12 μm in width, wall slightly thickened, fine pits occasionally observed, occasionally 1~2 moniliform thickened.

Thin layer chromatographic identification test (General rule 1010.3):

1. Sample solution: Add 1.0 g of powdered sample to 30 mL of methanol, heat under reflux for 1 hour, cool, filter, evaporate the filtrate to dryness, wash the residue with 2 mL of ethyl ether, discard the ethyl ether solutions, and dissolve the residue in 1 mL of methanol.
2. Reference drug solution: Use 1.0 g of the reference drug as the same method described above.
3. Procedure: Use silica gel F_{254} as the coating substance and a solution of petroleum ether (30~60 ℃) and ethyl acetate (10:7) as the developing solvent. Apply 5 μL of each of the above solutions to the plate. Once the top of the solvent rise to about 5~10 cm from the origin, dry in air. Spray with a 10% solution of phosphomolybdic acid in ethanol (Phosphomolybdic Acid/EtOH TS) and heat at 105℃ until the spots become visible. Examine under the visible light. The spots in the chromatogram obtained from the sample solution correspond in R_f values and color to the spots in the chromatogram obtained from the reference drug solution.

Impurities and other requirements:

1. Loss on drying: Not more than 12.0% under heating at 105℃ for 5 hours (General rule 5008).
2. Total ash: Not more than 3.0% (General rule 5004).
3. Acid-insoluble ash: Not more than 1.0% (General rule 5004).

Assay:

1. Water extractives: Carry out the method for determination of water extractives (General rule 5006).
2. Dilute ethanol extractives: Carry out the method for determination of dilute ethanol-soluble extractives (General rule 5006).

Storage: Store in a ventilated and dry place, and protect from insects.
Usage: Dampness-draining diuretic medicinal.
Dosage: 1~3 g.

KAEMPFERIAE RHIZOMA
山柰
Shan Nai / Shan Nai
Kaempferia Rhizome

Kaempferia rhizome is the dried rhizome of *Kaempferia galanga* L. (Fam. Zingiberaceae).
It contains not less than 9.0% of dilute ethanol-soluble extractives, not less than 10.0% of water extractives and not less than 4.5% (v/w) of volatile oil.

Description: Subrounded, 1.5~2 cm in diameter, 2~6 mm thick. Externally yellowish-brown, shrunken, with

scars of roots and scale leaves and annulations. Texture fragile, easily broken, fracture grayish-white, starchy, smooth and delicate, occasionally with distinct endodermis, stele slightly protuberant than cortex. Odor, aromatic; taste, pungent.

Microscopic identification:

1. **Transverse section:** Epidermal cells composed of 1~2 layers of cells, subrectangular or subsquare, covered with cuticle, mostly broken, containing reddish-brown contents. Rhytidome composed of 12~15 layers of cells, rectangular, subrectangular or subsquare. Cortex broad, cells rectangular, flat-rectangular, subsquare, subrounded or subpolygonal, with distinct intercellular spaces, containing numerous starch granules, occasionally with oil cells and yellowish-brown masses. Endodermis composed of 1 layer of distinct cells, rectangular, subrectangular or subsquare. Vascular bundles in a ring, phloem and xylem arranged alternately, respectively. Bark cells relatively small, rectangular, subrectangular, subsquare, subpolygonal or subrounded. Xylem mainly composed of spiral, scalariform or annular vessels; vessels singly scattered or linked by several, 16~38 μm in diameter, extremely long, a few vessels developing towards the pith. Pith broad, occupying 1/2~2/3 portion of the rhizome, composed of large parenchymatous cells, subrounded, suboblong, rectangular, subrectangular, subsquare or subpolygonal, with distinct intercellular spaces, containing abundant starch granules; occasionally with oil cells and yellowish-brown masses.
2. **Powder:** Pale yellowish-brown. In surface view, cork cells reddish-brown, subrectangular, subsquare or subpolygonal, with slightly lignified and thickened walls, containing reddish-brown masses. Parenchymatous cells of cortex subrectangular, subsquare or rectangular, with intercellular spaces distinct, contain abundant starch granules with large oil cells with pale yellow or pale reddish-brown oil droplets, and cells containing reddish-brown masses. Vessels extremely long, 14~76 μm in diameter, mainly spiral, scalariform or annular. Starch granules abundant, mainly individual, spheroid, ellipsoidal or subtriangular, mostly flattened, 4~33 μm in diameter, hilum and striations indistinct. Colored masses subrounded, ellip-rectangular or irregular, yellow or yellowish-brown.

Thin layer chromatographic identification test (General rule 1010.3):

1. Sample solution: Add 1.0 g of powdered sample to 10 mL of methanol, ultrasonicate for 10 minutes, filter and use the filtrate.
2. Reference drug solution: Use 1.0 g of the reference drug as the same method described above.
3. Reference standard solution: Weigh accurately a quantity of ethyl *p*-methoxy cinnamate and dissolve in methanol to produce a solution containing 5.0 mg per mL.
4. Procedure: Use silica gel F_{254} as the coating substance and a solution of *n*-hexane and ethyl acetate (18:1) as the developing solvent. Apply 2 μL of each of the above solutions to the plate. Once the top of the solvent rise to about 5~10 cm from the origin, dry in air. Examine under ultraviolet light at 254 nm. The spots in the chromatogram obtained from the sample solution correspond in R_f values and color to the spots in the chromatogram obtained from the reference drug solution and the reference standard solution.

Impurities and other requirements:

1. Total ash: Not more than 7.0% (General rule 5004).
2. Acid-insoluble ash: Not more than 2.0% (General rule 5004).

Assay:

1. Water extractives: Carry out the method for determination of water extractives (General rule 5006).
2. Dilute ethanol extractives: Carry out the method for determination of dilute ethanol-soluble extractives (General rule 5006).
3. Volatile oil: Carry out the method for determination of volatile oil (General rule 5007).

Storage: Store in a cool and dry place.
Usage: Interior-warming medicinal.
Dosage: 6~9 g for decocting, 1~3 g for powdering.

KAKI CALYX
柿蒂
Shih Di / Shi Di
Persimmon Calyx

Persimmon calyx is the dried persistent calyx of *Diospyros kaki* Thunb. (Fam. Ebenaceae).
It contains not less than 5.0% of dilute ethanol-soluble extractives and not less than 5.0% of water extractives.

Description: Dish shaped, 1.5~2.5 cm in diameter, 1~4 mm thick. Outer surface reddish-brown, with yellowish-brown tomenta, lustrous, inner surface yellowish-brown and pubescent, arranged in radial. Middle part relatively thick, 4-lobed, lobes broadly triangular, 1~1.5 cm in length, about 2 cm in width, frequently reflexed, with fruit stalk or its scars in the center. Texture hard and fragile. Odor, slight; taste, astringent.

Microscopic identification:

1. **Powder:** Brown. Epidermal cells polygonal or subsquare. Unicellular non-glandular hairs 150~300 μm in length, 20~25 μm in diameter, wall thick, containing brown contents. Glandular hairs

occasionally visible, with head 2~3 celled, about 30 μm in diameter, containing reddish-brown contents. Stone cells mostly branched, 80~150 μm in diameter, pits and pit canals distinct. Prisms of calcium oxalate 5~25 μm in diameter.

Thin layer chromatographic identification test (General rule 1010.3):

1. Sample solution: Add 2.0 g of powdered sample to 10 mL of 70% ethanol, macerate for 2 hours with warm water then filter, evaporate the filtrate to dryness, dissolve the residue in 1 mL of methanol.
2. Reference drug solution: Use 2.0 g of the reference drug as the same method described above.
3. Reference standard solution: Weigh accurately 5.0 mg of gallic acid and dissolve in methanol to produce a 10 mL solution.
4. Procedure: Use silica gel F_{254} as the coating substance and a solution of toluene (saturated with water), ethyl formate and formic acid (5:4:1) as the developing solvent. Apply 5 μL of the sample solution and reference drug solution and 2 μL of the reference standard solution to the plate. Once the top of the solvent rise to about 5~10 cm from the origin, dry in air. Spray with a 1% solution of ferric chloride in ethanol ($FeCl_3$/EtOH TS), heat at 105℃ for 3 minutes, examine under visible light. The spots in the chromatogram obtained from the sample solution correspond in R_f values and color to the spots in the chromatogram obtained from the reference drug solution and the reference standard solution.

Impurities and other requirements:

1. Loss on drying: Not more than 13.0% under heating at 105℃ for 5 hours (General rule 5008).
2. Total ash: Not more than 9.0% (General rule 5004).
3. Acid-insoluble ash: Not more than 2.0% (General rule 5004).

Assay:

1. Water extractives: Carry out the method for determination of water extractives (General rule 5006).
2. Dilute ethanol extractives: Carry out the method for determination of dilute ethanol-soluble extractives (General rule 5006).

Storage: Store in a cool and dry place, and protect from moisture.
Usage: Qi-regulating medicinal.
Dosage: 4.5~9 g.

KANSUI RADIX
甘遂
Gan Suei / Gan Sui
Kansui Root Tuber

Kansui root tuber is the dried root tuber of *Euphorbia kansui* T. N. Liou ex T. P. Wang (Fam. Euphorbiaceae).
It contains not less than 14.0% of dilute ethanol-soluble extractives and not less than 12.0% of water extractives.

Description: Hypertrophy root tuber long fusiform or oblong, tapered at both ends, constricted as moniliform in the middle, 2~10 cm in length, 0.6~1.5 cm in diameter, externally yellowish-white, often with brownish-red patches of cork adhering, especially in constricted place with several fibrous roots scars. Slender root tuber slightly rod-shaped and curved, 3~5 mm in diameter, almost all brownish-red of cork remain and distinct longitudinal groove and several long transverse lenticels. Texture light, fracture bark thick and whitish, wood pale yellow and with slightly radial-striated. Odor, slight; taste, slightly sweetish and pungent, irritant.

Microscopic identification:

1. **Transverse section:** The outermost epidermis covered with cuticle, 1 layer, mostly broken, rectangular or subsquare. Phelloderm composed of 6~9 layers of cells, rectangular, subrectangular or subsquare. Cortex slightly narrow, composed of 5~8 layers of cells, rectangular to flat-rectangular, scattered with sclerenchyma cells, subtriangular, subrectangular, subsquare or irregular, slightly lignified or unlignified, 24~26 μm in diameter, 66~110 μm in length. Phloem broad, occupying about 2/3 portion of the root, mainly composed of parenchymatous cells filling with starch granules, rectangular, subrectangular, subsquare, subpolygonal or subrounded, with distinct intercellular spaces; occasionally non-articulated laticiferous tubes containing yellow secretions present; cells gradually small near cambium, with small cribrose (sieve) cells present. Cambium in a ring, slightly distinct, 3~5 layered, rectangular to flat-rectangular shaped. Xylem slightly broad, occupying about 1/3 portion of the root, composed of, xylem parenchymatous cells of vessels and xylem fibers; vessels slightly large, singly scattered or linked by several, arranged interruptedly and radially, 18~65 μm in diameter, mainly bordered-pitted and pitted, cells subrounded, subpolygonal, subovate or subsquare, occasionally with unlignified fibers adjacent to vessels. Rays relatively broad, growing to phloem, composed of parenchymatous cells, subrectangular, subsquare, subpolygonal or subrounded, containing numerous starch granules. Primary xylem existed at the center, composed of vessels and small parenchymatous cells.
2. **Powder:** Yellowish-white. Simple granules subrounded or elliptical, 4~36 μm in diameter;

hilum stellated, cruciate, Y-shaped, slit-shaped or dotted, the larger one with distinct striations; compound granules numerous, composed of 2~14 components, rare semi-compound granules present. Sclerenchyma cells subpolygonal, subtriangular, subsquare, conchoidal or irregular, 18~56 μm in diameter, 36~208 μm in length, walls thickened unevenly, unlignified, pit canals relatively broad. Bordered-pitted vessels, 13~79 μm in diameter, vessel elements generally short, some irregular in shape and cross-overlapped. Xylem fibers slender, edge uneven, oblique, acuminate, obtusely rounded or short branches at the end, some twisted, 15~27 μm in diameter, walls slightly thickened, unlignified, with sparse oblique simple pits. Non-articulated laticiferous tubes 11~18 μm in diameter.

Thin layer chromatographic identification test (General rule 1010.3):

1. Sample solution: Add 1.0 g of powdered sample to 10 mL of ethanol, ultrasonicate for 30 minutes, filter, evaporate the filtrate to dryness, and dissolve the residue in 1 mL of ethanol.
2. Reference drug solution: Use 1.0 g of the reference drug as the same method described above.
3. Reference standard solution: Weigh accurately a quantity of euphadienol and dissolve in methanol to produce a solution containing 1.0 mg per mL.
4. Procedure: Use silica gel F_{254} as the coating substance and a solution of petroleum ether (30~60 ℃) and acetone (5:1) as the developing solvent. Apply 2 μL of each of the above solutions to the plate. Once the top of the solvent rise to about 5~10 cm from the origin, dry in air. Spray with a 10% solution of sulfuric acid in ethanol (H_2SO_4/EtOH TS), and heat at 105℃ until the spots become visible. Examine under visible light and ultraviolet light at 365 nm. The spots in the chromatogram obtained from the sample solution correspond in R_f values and color to the spots in the chromatogram obtained from the reference drug solution and the reference standard solution.

Impurities and other requirements:

1. Loss on drying: Not more than 14.0% under heating at 105℃ for 5 hours (General rule 5008).
2. Total ash: Not more than 5.0% (General rule 5004).
3. Acid-insoluble ash: Not more than 1.0% (General rule 5004).

Assay:

1. Water extractives: Carry out the method for determination of water extractives (General rule 5006).
2. Dilute ethanol extractives: Carry out the method for determination of dilute ethanol-soluble extractives (General rule 5006).

Storage: Store in a ventilated and dry place, and protect from insects.
Usage: Purgative medicinal (Offensive purgative and water-expelling medicinal).
Dosage: 0.5~1.5 g.
Precaution and warning: Unprocessed one toxic, store with caution and processed before application. Forbidden during pregnancy. Incompatible with Glycyrrhizae Radix et Rhizoma.

KOCHIAE FRUCTUS
地膚子
Di Fu Zih / Di Fu Zi
Belvedere Fruit

Belvedere fruit is the dried ripe fruit of *Kochia scoparia* (L.) Schrad. (Fam. Chenopodiaceae).
It contains not less than 10.0% of dilute ethanol-soluble extractives and not less than 10.0% of water extractives.

Description: Oblate-spheroidal, five-pointed star shape, 0.1~0.3 cm in diameter, surrounded by a persistent perianth. Externally grayish-green or pale brown, with 5 triangular membranous winglets, the center of dorsal surface with a protuberance of pointed fruit stalk scar and 5~10 radial veins; membranous pericarp present when the perianth stripped, translucent, with dot striations. Seed 1, flattened-ovate, about 0.1 cm in length, black. Odor, slight; taste, slightly bitter.

Microscopic identification:

1. **Transverse section:** Persistent perianth composed of 1 layer of parenchymatous cells, stone cells present occasionally. Pericarp composed of 1 layer of U-shaped sclerenchymatous cells, containing numerous small prisms of calcium oxalate. Testa composed of 1 layer of cells, yellowish-brown. Perisperm composed of polygonal parenchymatous cells, filled with minute starch granules. Radicle relatively small, composed of parenchymatous cells, filled with aleurone grains. Cotyledons relatively large, the cells containing aleurone grains and oil droplets. Epicotyl located at the center of the cotyledons.
2. **Powder:** Grayish-green or yellowish-brown. Non-glandular hairs composed of 2~3 cells, occasionally walls warty. Walls of stone cells slightly thickened, pits rarely present; some stone cells short fiber-like, 65~150 μm in length, walls relatively thickened and lignified. Epidermal cells of persistent perianth polygonal in surface view; stomata subrounded and yellowish-brown, anomocytic, with 4~5 subsidiary cells. Anticlinal walls of pericarp cells slightly undulate, cells filled with small prisms of calcium oxalate, 3~13 μm in diameter, occasionally with clusters. Testa cells yellowish-brown, slightly rectangular or square, mostly shrunken.

Thin layer chromatographic identification test (General rule 1010.3):

1. Sample solution: Weigh accurately 1.0 g of powdered sample, transfer to a 10-mL volumetric flask, dissolve in 10 mL of methanol, ultrasonicate for 30 minutes, cool and filter, and add methanol to volume.
2. Reference drug solution: Use 1.0 g of the reference drug as the same method described above.
3. Procedure: Use silica gel F_{254} as the coating substance and a solution of *n*-butanol, water and glacial acetic acid (7:2:1) as the developing solvent. Apply 10 μL of each of the above solutions to the plate. Once the top of the solvent rise to about 5~10 cm from the origin, dry in air. Spray with a solution of *p*-anisaldehyde in sulfuric acid (*p*-Anisaldehyde/H_2SO_4 TS), heat at 105℃ until the spots become visible, and examine under the ultraviolet light at 365 nm. The spots in the chromatogram obtained from the sample solution correspond in R_f values and color to the spots in the chromatogram obtained from the reference drug solution.

Impurities and other requirements:

1. Loss on drying: Not more than 13.0% under heating at 105℃ for 5 hours (General rule 5008).
2. Total ash: Not more than 10.0% (General rule 5004).
3. Acid-insoluble ash: Not more than 3.0% (General rule 5004).

Assay:

1. Water extractives: Carry out the method for determination of water extractives (General rule 5006).
2. Dilute ethanol extractives: Carry out the method for determination of dilute ethanol-soluble extractives (General rule 5006).

Storage: Store in a ventilated and dry place, and protect from insects.
Usage: Dampness-draining diuretic medicinal.
Dosage: 9~15 g.

LABLAB ALBUM SEMEN
白扁豆
Bai Bian Dou / Bai Bian Dou
White Hyacinth Bean

White hyacinth bean is the dried ripe seed of *Dolichos lablab* L. (Fam. Leguminosae).
It contains not less than 8.0% of dilute ethanol-soluble extractives and not less than 9.0% of water extractives.

Description: Flattened-ellipsoidal, flattened-ovate or reniform, 8~13 mm in length, 6~9 mm in width, 4~6 mm thick. Externally yellowish-white or pale yellow, smooth, slightly lustrous, occasionally scattered with brownish-black dots, with a white and protuberant caruncle at the edge of one side. Caruncle crescent-shaped, 7~10 mm in length, commonly known as "Bai Mei". Sunken hilum present after the removal of caruncle, micropyle near the hilum, raphe short occurring on the other side. Testa thin and fragile, 2 cotyledons, plump. Odor slight; taste, weak, bean-like on chewing.

Microscopic identification:

1. **Transverse section:** Epidermal cells of testa composed of 1 layer of palisade cells, 2 layers at the hilum, lateral walls gradually thickened from inner to outer; brace cells 1 layered, 3~5 layers at the hilum, dumbbell-shaped; parenchymatous cells composed of more than 10 layers of cells, mostly elongated tangentially, with obliterated cells at the inner side. Epidermal cells of cotyledon subsquare; mesophyllous cells contain numerous starch granules. Strophiole existed at the outer side of the palisade cells of hilum, cells subrounded or irregularly long cylindrical, containing numerous starch granules; inside showing tracheid, with reticulate-thickened walls; stellated tissue existed on the both sides of tracheid, cells stellated, with large intercellular spaces.
2. **Powder:** Yellowish-white. Simple granules subrounded, ovate, wide-ovate, reniform, circularly triangular or irregular, 3~39 μm in diameter, up to 46 μm in length. In sectional view, palisade cells of testa 26~214 μm in length, 5~6 μm in width, external walls extremely thickened, with many longitudinal ridges, lateral walls thickened on the upper part, slightly thickened on the middle and lower parts, internal walls thin with a light line near the margin; on the top view, the cells subpolygonal, showing the extremely thick walls and fine pit canals; in the bottom view, the cells subrounded with thick walls and large lumina. Brace cells of testa present in groups or individually scattered, dumbbell-shaped in the lateral view, 20~125 μm in length, with thin inner and outer walls, up to 14 μm thick at the middle part of lateral walls; subrounded or ovate on the surface view, 20~68 μm in diameter, with annularly thickened walls of the middle part of lateral walls, lumina distinct. Strophiole cells palisade-shaped, suboblong or irregular, up to 280 μm in length, 9~70 μm in diameter, walls slightly thickened, occasionally with tangentially small pits, lumen filled with small starch granules. Asteroid cells with wide and short branches, walls slightly thickened, lumen contains brown contents. Cotyledon cells also present.

Identification:

1. Check steroid: Evaporate the 70% ethanol extract to dryness, add drops of acetic anhydride-sulfuric acid, a yellow color is produced and turns to red, purplish-red and dark green gradually.

Impurities and other requirements:

1. Loss on drying: Not more than 12.0% under heating at 105℃ for 5 hours (General rule 5008).
2. Total ash: Not more than 4.0% (General rule 5004).
3. Acid-insoluble ash: Not more than 1.0% (General rule 5004).

Assay:

1. Water extractives: Carry out the method for determination of water extractives (General rule 5006).
2. Dilute ethanol extractives: Carry out the method for determination of dilute ethanol-soluble extractives (General rule 5006).

Storage: Refrigerate or store in a cool and dry place, and protect from moisture and insects.
Usage: Tonifying and replenishing medicinal (Qi-tonifying medicinal).
Dosage: 9~15 g.

LEONURI FRUCTUS
茺蔚子
Chong Wei Zih / Ching Wei Zi
Motherwort Fruit

Motherwort fruit is the dried ripe fruit of *Leonurus japonicus* Houtt. (Fam. Labiatae).
It contains not less than 4.0% of dilute ethanol-soluble extractives and not less than 5.0% of water extractives.

Description: Trihedral, one side slightly broad, the other side attenuate, with dented scar of fruit stalk, 0.2~0.3 cm in length, 0.15 cm in width. Externally grayish-brown, with dark-colored maculates, dull. Pericarp thin, brown, endosperm and cotyledon grayish-white, oily. Odor, slight; taste, bitter.

Microscopic identification:

1. **Transverse section:** Pericarp composed of 1 row of pale yellow and elongated radially cells, mesocarp composed of 2~3 rows of subsquare parenchymatous cells, cells contain prisms of calcium oxalate near endocarp. Endocarp hard, composed of 1 row of radially elongated and subovate or subsquare stone cells. Epidermal cells of testa subsquare, wall slightly thickened, lumen containing pale yellowish-brown contents. Endosperm and cotyledon cells contain aleurone grains and fatty oil.
2. **Powder:** Brownish-yellow. Pericarp cells elongated radially in sectional view, varying in length, forming numerous protuberant ridges with yellow reticulated cells in the center, walls unlignified and with lateral pits; subpolygonal in surface view, wall slightly thickened with strip-horny striations. Mesocarp cells subpolygonal in surface view, with thin and sinuous walls. Inner walls of endocarp extremely thickened, with pit canals, outer walls thin, lumen containing prisms of subsquare or subrhombic calcium oxalate, about 18 μm in diameter.

Thin layer chromatographic identification test (General rule 1010.3):

1. Sample solution: Add 5.0 g of powdered sample to 20.0 mL of methanol, ultrasonicate for 1 hour, filter and use the filtrate.
2. Reference drug solution: Use 5.0 g of the reference drug as the same method described above.
3. Reference standard solution: Weigh accurately a quantity of stachydrine hydrochloride and dissolve in ethanol to produce a solution containing 5.0 mg per mL.
4. Procedure: Use silica gel F_{254} as the coating substance and a solution of *n*-butanol, hydrochloric acid and water (4:1:0.5) as the developing solvent. Apply 5 μL of each of the above solutions to the plate. Once the top of the solvent rise to about 5.5 cm from the origin, dry in air. Spray with modified Dragendorff's reagent until the spots become visible, and examine under visible light. The spots in the chromatogram obtained from the sample solution correspond in R_f values and color to the spots in the chromatogram obtained from the reference drug solution and the reference standard solution.

Impurities and other requirements:

1. Loss on drying: Not more than 8.0% under heating at 105℃ for 5 hours (General rule 5008).
2. Total ash: Not more than 10.0% (General rule 5004).
3. Acid-insoluble ash: Not more than 4.0% (General rule 5004).

Assay:

1. Water extractives: Carry out the method for determination of water extractives (General rule 5006).
2. Dilute ethanol extractives: Carry out the method for determination of dilute ethanol-soluble extractives (General rule 5006).

Storage: Store in a ventilated and dry place.
Usage: Blood-activating and stasis-dispelling medicinal.
Dosage: 4.5~9 g.
Precaution and warning: Used with caution in mydriasis.

LEONURI HERBA
益母草
Yi Mu Cao / Yi Mu Cao
Motherwort Herb

Motherwort herb is the dried aerial part of *Leonurus japonicus* Houtt. (Fam. Labiatae).

It contains not less than 8.0% of dilute ethanol-soluble extractives and not less than 8.0% of water extractives.

Description: Stems quadrangular, branched less, pubescent. Leaves pubescent, opposite, pinnatifid, mostly 3-lobed, lobe narrowly, upper surface green, lower surface whitish, petioled. Inflorescences verticillate cymes, axillary, bracteoles subulate, calyx 5-lobed, corolla 2-lipped, white or reddish-purple, lower lip 3-lobed, with dark purple striations, stamen didynamous, filaments white with red spots, ovary 4-lobed, 4-locular, one ovule in each loculus. Nutlets brown, triangular, 2~5 mm in length, smooth, calyx persistent. Odor, slight; taste, slightly bitter.

Microscopic identification:

1. **Transverse section:**
   (1) Stem: Epidermis with thickened outer wall, cutinized, a few of trichomes and stomata occasionally found. Hypodermis composed of 6~8 layers of collenchymatous cells. Parenchymatous cells of cortex contain chloroplast and starch granules, small raphides and prism crystals also present. Endodermis with large cells. Phloem relatively narrow, with few pericycle fiber bundles scattered outside the phloem, young stem with fiber bundles few or none. Cambium composed of 1~3 layers of cells, occasionally indistinct. Xylem well developed in the angular region, vessels up to 40 μm in diameter, with all kinds of striations. Xylem fibers with walls slightly thickened but highly lignified. Xylem parenchymatous cells lignified. Pith with large cells, containing small raphides and prisms.
   (2) Leaf: Lower epidermis with stomata, both upper and lower epidermis contain trichomes. Palisade tissue composed of 1 layer of cells, spongy tissue composed of several rows of cells, mesophyllous cells contain small raphides and cluster crystals.
2. **Powder:** Pale greenish-brown. Epidermal cells with wavy walls, lower epidermal cells with stomata, mainly anomocytic, diacytic stomata occasionally present. Non-glandular hairs extremely numerous, mostly composed of 2 cells, slightly curved, up to 310 μm in length and about 20 μm thick, cells at the apex extremely long, occupying more than 2/3 portion of the hair. Trichomes with thickened and slightly warty cell walls, lumen fine and narrow at the top, the base surrounded by 3~6 slightly protuberant epidermal cells. Unicellular or up to 5-celled long non-glandular hairs occasionally found. Glandular hairs rare, labiatae type, the head flattened-spheroidal, composed of 8 cells, about 55 μm in diameter, stalk extremely short. Glandular hairs with head 1~4 celled and extremely short stalk are rare, about 22 μm in diameter. Small raphides and cluster crystals, existed in mesophyllous cells.

Thin layer chromatographic identification test (General rule 1010.3):

1. Sample solution: Add 1.0 g of powdered sample to 10 mL of methanol, ultrasonicate for 30 minutes, filter and use the filtrate.
2. Reference drug solution: Use 1.0 g of the reference drug as the same method described above.
3. Reference standard solution: Weigh accurately a quantity of stachydrine hydrochloride and dissolve in methanol to produce a solution containing 3.0 mg per mL.
4. Procedure: Use silica gel F_{254} as the coating substance and a solution of propanol, methanol and formic acid (1:10:1) as the developing solvent. Apply 5 μL of each of the above solutions to the plate. Once the top of the solvent rise to about 5~10 cm from the origin, dry in air and expose to iodine vapor until the spots become visible. The spots in the chromatogram obtained from the sample solution correspond in R_f values and color to the spots in the chromatogram obtained from the reference drug solution and the reference standard solution.

Impurities and other requirements:

1. Loss on drying: Not more than 14.0% under heating at 105℃ for 5 hours (General rule 5008).
2. Total ash: Not more than 12.0% (General rule 5004).
3. Acid-insoluble ash: Not more than 4.0% (General rule 5004).

Assay:

1. Water extractives: Carry out the method for determination of water extractives (General rule 5006).
2. Dilute ethanol extractives: Carry out the method for determination of dilute ethanol-soluble extractives (General rule 5006).

Storage: Store in a dry place.
Usage: Blood-regulating medicinal (Blood-activating and stasis-dispelling medicinal).
Dosage: 9~30 g.
Precaution and warning: Forbidden during pregnancy.

LEPIDII SEMEN
DESCURAINIAE SEMEN
葶藶子
Ting Li Zih / Ting Li Zi
Pepperweed Seed
Tansymustard Seed

Pepperweed seed and tansymustard seed is the dried ripe seed of *Lepidium apetalum* Willd. or *Descurainia sophia*

(L.) Webb. ex Prantl. (Fam. Cruciferae). The former is commonly known as "Bei Ting Li Zih", and the latter is commonly known as "Nan Ting Li Zih".
It contains not less than 7.5% of dilute ethanol-soluble extractives and not less than 9.0% of water extractives.

Description:
1. Seed of *Lepidium apetalum*: Flattened-ovoid, 1~1.5 mm in length, 0.5~1 mm in width. Externally brown or reddish-brown, slightly lustrous, with 2 longitudinally furrows, one furrow relatively distinct. One end obtusely rounded, the other end acute and slightly concave, hilum whitish and situated at the concave end. Odorless; taste, slightly bitter and pungent, relatively viscous when moistened.
2. Seed of *Descurainia sophia*: Oblong, slightly flattened, 0.8~1.2 mm in length, about 0.8 mm in width. Externally yellowish-brown, with finely reticulate wrinkles and 2 longitudinally shallow furrows. One end obtuse, the other slightly concave or relatively truncate, hilum situated at the concave end. Odor, slight; taste, slightly pungent, slightly viscous when moistened.

Microscopic identification:
1. **Transverse section:**
   (1) Seed of *Lepidium apetalum*: The outermost layer was epidermis differentiated into mucilage layer, up to 216 μm thick, inner walls with sedimentary cellulose forming cellulose columns extended radially, 24~34 μm in length, the apex obtusely rounded, oblique or truncate, surrounded by mucilage striations. Palisade cells 1 row, slightly square, 26~34 μm in width, lateral and inner walls thickened, strongly lignified. Pigment layer with cells obliterated, inside showing 1 row of flatten endosperm cells, containing aleurone grains. Cotyledons occupied the most part of the seed, cells irregularly polygonal, wall slightly thickened, and containing aleurone grains.
   (2) Seed of *Descurainia sophia*: Mucilage layer of the outer walls of mucilage cells relatively thin, about 100 μm thick, cellulose columns of inner walls 8~28 μm in length, the base with relatively large papillary protuberance, lignified and red. The other characters are same as *Lepidium apetalum*.
2. **Powder:**
   (1) *Lepidium apetalum*: Yellowish-brown. Epidermis of testa composed of subsquare mucilage cells. Cellulose columns distinct visible, 26~34 μm in length, subrounded, surrounded by mucilage striations. Endodermal cells of testa yellow, polygonal.
   (2) *Descurainia sophia*: Yellowish-brown. Epidermal cells of testa slightly rectangular, cellulose columns relatively short. Endodermal cells of testa rectangular-polygonal.

Impurities and other requirements:
1. Loss on drying: Not more than 9.0% under heating at 105℃ for 5 hours (General rule 5008).
2. Total ash: Not more than 7.0% (General rule 5004).
3. Acid-insoluble ash: Not more than 3.0% (General rule 5004).

Assay:
1. Water extractives: Carry out the method for determination of water extractives (General rule 5006).
2. Dilute ethanol extractives: Carry out the method for determination of dilute ethanol-soluble extractives (General rule 5006).

Storage: Store in a ventilated and dry place.
Usage: Phlegm-dispelling, cough-suppressing and panting-calming medicinal.
Dosage: 3~9 g.

LIGUSTICI RHIZOMA ET RADIX
藁本
Gao Ben / Gao Ben
Jehol Ligusticum Rhizome and Root

Jehol ligusticum rhizome and root is the dried rhizome and root of *Ligusticum sinense* Oliv. or *Ligusticum jeholense* Nakai et Kitag. (Fam. Umbelliferae).
It contains not less than 15.0% of dilute ethanol-soluble extractives, not less than 15.0% of water extractives and not less than 0.05% of ferulic acid.

Description:
1. Rhizome and root of *Ligusticum sinense*: Rhizomes irregulary tubercular cylindrical, slightly branched and twisted, 3~8 cm in length, 1~3 cm in diameter; externally brown, rough and shrunken, with irregular longitudinal wrinkles and annulations. The upper part remained with round and hollowed stem bases; the lower part bearing with numerous dotted and protuberant root scars. Bark easily exfoliated. Texture hard, easily broken; fracture pale yellow, fibrous. Odor, aromatic; taste, pungent, bitter and slightly numbing.
2. Rhizome and root of *Ligusticum jeholense*: Rhizomes in irregular masses or columnar, 1~6 cm in length, 0.5~2 cm in diameter, with numerous slender and curved roots; externally grayish-brown, with protuberant nodes and root scars, fracture fibrous, yellowish-white, scattered with brown cavities, pith in the center.

Microscopic identification:
1. **Transverse section:**
   (1) Rhizome and root of *Ligusticum sinense*:

Cork composed of 10~15 rows of subsquare cork cells, yellowish-brown. Cortex subsquare or polygonal, wall slightly thickened, containing oil cavities, 70~150 μm in diameter. Phloem with abundant secretory cavities, 70~200 μm in diameter, containing yellowish-brown secretions. Cambium arranged in a ring. Xylem less developed, xylem fibers mostly in bundles, 10~30 μm in diameter, brownish-yellow, wall thickened. Vessels mainly reticulate and spiral, 15~40 μm in diameter, yellow and lignified. Rays distinct, arranged radially, 6~12 rows. Pith large, containing abundant secretory canals. Parenchymatous cells contain starch granules.

(2) Rhizome and root of *Ligusticum jeholense*: The characters are similar to rhizome and root of *Ligusticum sinense*. Phloem with numerous oil cavities. Xylem fibers relatively numerous, wall thickened, arranged alternately with vessels.

2. **Powder:**

(1) Rhizome and root of *Ligusticum sinense*: Grayish-brown. Cork cells subrectangular in sectional view, subpolygonal or subrectangular in surface view, anticlinal walls 5~10 μm thick, slightly curved. Xylem fibers fusiform, 10~30 μm in diameter, wall 4~10 μm thick, pits small, pale yellow. Stone cells oblong, polygonal or subsquare, 30~60 μm in diameter, 50~100 μm in length, wall 5~18 μm thick. Secretory cavities huge, mostly broken, containing yellowish-brown contents. Vessels mainly reticulate and spiral, bordered-pitted and scalariform vessels occasionally found, 15~40 μm in diameter, yellow and lignified.

(2) Rhizome and root of *Ligusticum jeholense*: Grayish-brown. Cork cells subsquare or rectangular. Stone cells elongated-polygonal, subsquare or oblong, 15~50 μm in diameter. Xylem fibers fusiform, 10~30 μm in diameter, pits fine-dotted, with horizontal clefts. Reticulate and scalariform vessels 10~65 μm in diameter, reticular-spiral vessels 16~27 μm in diameter.

Thin layer chromatographic identification test (General rule 1010.3):

1. Sample solution: Add 1.0 g of powdered sample to 10 mL of ethanol, heat under reflux for 30 minutes, cool, filter, make up the filtrate to 10 mL.
2. Reference drug solution: Use 1.0 g of the reference drug as the same method described above.
3. Procedure: Use silica gel F_{254} as the coating substance and a solution of *n*-hexane and ethyl acetate (7:3) as the developing solvent. Apply 5 μL of each of the above solutions to the plate. Once the top of the solvent rise to about 5~10 cm from the origin, dry in air. Spray with a solution of *p*-anisaldehyde in sulfuric acid (*p*-Anisaldehyde/ H_2SO_4 TS) and heat at 105℃ for 2 minutes. Examine under the visible light. The spots in the chromatogram obtained from the sample solution correspond in R_f values and color to the spots in the chromatogram obtained from the reference drug solution.

Impurities and other requirements:

1. Total ash: Not more than 8.0% (General rule 5004).
2. Acid-insoluble ash: Not more than 3.0% (General rule 5004).

Assay:

1. Ferulic acid:

(1) Mobile phase: A solution of methanol and water (40:60) (adjust pH value to 3.5 with phosphoric acid). The ratio varies as required.

(2) Reference standard solution: Weigh accurately a quantity of ferulic acid and dissolve in methanol to produce a solution containing 15 μg per mL.

(3) Sample solution: Weigh accurately 0.1 g of the powdered sample, transfer to a 10-mL centrifuge tube, accurately add 5 mL of methanol, weigh, stand overnight, ultrasonicate for 20 minutes, weigh again, replenish the loss of the weight with methanol, mix well, centrifuge, use the supernatant.

(4) Chromatographic system: The liquid chromatography is equipped with an ultraviolet absorption photometer (wavelength: 320 nm) and a column packed with octadecylsilanized silica gel. The number of theoretical plates of the peak of ferulic acid should not be less than 2,500.

(5) Procedure: Inject accurately 10 μL of each of the reference standard solution and the sample solution into the liquid chromatography apparatus, and calculate the content.

2. Water extractives: Carry out the method for determination of water extractives (General rule 5006).
3. Dilute ethanol extractives: Carry out the method for determination of dilute ethanol-soluble extractives (General rule 5006).

Storage: Store in a cool and dry place, and protect from moisture and insects.

Usage: Pungent-warm exterior-releasing medicinal.

Dosage: 3~9 g.

LIGUSTRI LUCIDI FRUCTUS
女貞子
Nyn Jhen Zih / Nu Zhen Zi
Glossy Privet Fruit

Glossy privet fruit is the dried ripe fruit of *Ligustrum lucidum* Ait. (Fam. Oleaceae).
It contains not less than 17.0% of dilute ethanol-soluble extractives and not less than 15.0% of water extractives.

Description: Ovate, ellipsoidal or reniform, 5~10 mm in length, 4~5 mm in diameter. Externally blackish-purple or brownish-black, with irregular reticulate wrinkles, base often with persistent calyx and the scar of fruit stalk. Exocarp thin, mesocarp relatively loose, endocarp woody, yellowish-brown, with longitudinal ribs. In cross section, 2-locularovary, each loculus containing a seed, commonly with one seed undeveloped. Seeds reniform, reddish-brown, Odor, slight; taste, slightly bitter and astringent.

Microscopic identification:

1. **Transverse section:** Exocarp composed of 1 layer of subpolygonal epidermal cells, containing oil droplets, the cuticle covering the outer and lateral walls thickened. Mesocarp consists of 10~20 layers of parenchymatous cells, scattered with vascular bundles near the bulge of the endocarp. Endocarp consists of 4~8 layers of lignified fibers. Epidermal cells of testa are elongated tangentially, often with secretory cells on the ridges. Parenchymatous cells of testa are brown. Endosperm contains two cotyledons.
2. **Powder:** Grayish-brown or blackish-gray. Epidermal cells of pericarp depressed-rounded, yellowish-brown or purplish-brown, with the rounded accrued cuticle of the outer wall thickened, separated the lumina by several arris; in surface view, epidermal cells of pericarp sub-oblate, with the cuticle of the outer wall thickened, divided into 4~10 irregular small lumina by several arris, containing yellowish-brown or purplish-brown masses. Fibers of endocarp in bundles or single, cross-overlapping in bundles; the single fiber has a band or a strip-shape, mostly curved, straight or twisted, tapering, blunt or branched at one end, some fibers are enlarged, boot-shaped. Epidermal cells of testa slight slender, pale brown or brown in color, scattered with secretory cells, occasionally linked by several. Secretory cells round or oblong, 45~100 μm in diameter, containing yellowish-brown secretion and oil droplet. Endodermal cells of pericarp, mesocarp cells, endosperm cells and crystals of calcium oxalate also present.

Thin layer chromatographic identification test (General rule 1010.3):

1. Sample solution: Add 1.0 g of powdered sample to 10 mLof ethyl actate, ultrasonicate for 30 minutes, filter, evaporate the filtrate to dryness, and dissolve the residue in 1 mL of methanol.
2. Reference drug solution: Use 1.0 g of the reference drug as the same method described above.
3. Reference standard solution: Weigh accurately a quantity of salidroside and dissolve in methanol to produce a solution containing 2.0 mg per mL.
4. Procedure: Use silica gel F_{254} as the coating substance and a solution of *n*-butanol, dichloromethane, methanol and water (2:4:1:0.5) as the developing solvent. Apply 2 μL of each of the sample solution and reference drug solution and 1 μL of each of the reference standard solution to the plate. Once the top of the solvent rise to about 5~10 cm from the origin, dry in air and expose to iodine vapor for 3~5 minutes. Examine under ultraviolet light at 365 nm. The spots in the chromatogram obtained from the sample solution correspond in R_f values and color to the spots in the chromatogram obtained from the reference drug solution and the reference standard solution.

Impurities and other requirements:

1. Loss on drying: Not more than 8.0% under heating at 105℃ for 5 hours (General rule 5008).
2. Total ash: Not more than 5.0% (General rule 5004).
3. Acid-insoluble ash: Not more than 1.0 % (General rule 5004).
4. Aflatoxins: Not more than 15.0 ppb (General rule 3053).

Assay:

1. Water extractives: Carry out the method for determination of water extractives (General rule 5006).
2. Dilute ethanol extractives: Carry out the method for determination of dilute ethanol-soluble extractives (General rule 5006).

Storage: Store in a dry place, and protect from mold and insects.
Usage: Tonifying and replenishing medicinal (Yin-tonifying medicinal).
Dosage: 6~12 g.

LILII BULBUS
百合
Bai He / Bai He
Lily Bulb

Lily bulb is the dried fleshly scale leaf of bulb of *Lilium lancifolium* Thunb., *Lilium brownii* F. E. Brown var. *viridulum* Baker or *Lilium pumilum* DC. (Fam. Liliaceae).
It contains not less than 10.0% of dilute ethanol-soluble extractives and not less than 18.0% of water extractives.

Description:

1. Scale leaf of bulb of *Lilium lancifolium*: Elongated ellipsoidal, apex slightly acute, base relatively broad, margins undulate, slightly curved inwards, 2~3.5 cm in length, l~1.5 cm in width, 1~3 mm thick. Externally whitish or pale yellowish-brown, smooth, translucent, with 3~8 longitudinal striations. Texture hard, easily broken, fracture relatively even, horny. Odorless; taste, slightly bitter.
2. Scale leaf of bulb of *Lilium brownie* var. *viridulum*: 1.5~3 cm in length, 0.5~l cm in width, up to 4 mm thick, with 3~5 striations, occasionally indistinct.
3. Scale leaf of bulb of *Lilium pumilum*: 5.5 cm in length, 2.5 cm in width, 3.5 mm thick, color dark, most striations indistinct.

Microscopic identification:

1. **Powder:**
   (1) Scale leaf of bulb of *Lilium lancifolium*: Pale yellow. In commercial material medica, starch granules mostly gelatinized. Ungelatinized starch granules long-ovate, subrounded, reniform or irregular, some acute at one end; 4~29 μm in diameter, up to 46 μm in length; hilum indistinct, V-shaped or short cleft-shaped, mostly located at the small end; striations faintly present. Anticlinal walls of epidermal cells slightly thickened, occasionally moniliform; stomata subrounded, 60~69 μm in diameter, with 3~5 subsidiary cells, subsidiary cells contain striations. Spiral and reticulate vessels up to 30 μm in diameter.
   (2) Scale leaf of bulb of *Lilium brownie* var. *viridulum*: Grayish-white. Ungelatinized starch granules long-ovate or oblong, both ends blunt or slightly truncate, occasionally angle-like protuberance at one side, 5~50 μm in diameter, up to 88 μm in length; hilum V-shaped, U-shaped or Y-shaped; striations relatively distinct. Walls of epidermal cells thin, slightly undulated; subrounded stomata 51~61 μm in diameter, flat-rounded ones 56~67 μm in diameter, oblong ones 40~48 μm in diameter, 45~61 μm in length, with 3~5 subsidiary cells. Spiral vessels up to about 25 μm in diameter.
   (3) Scale leaf of bulb of *Lilium pumilum*: Grayish-white. Ungelatinized starch granules subovoid, oval, pear-shaped or slightly conchoidal, slightly acute at the small end, occasionally angle-like protuberance at one or two sides, 3~48 μm in diameter, 72 μm in length; hilum V-shaped, dotted or short cleft-shaped; striations relatively distinct; compound granules composed of 2~4 components; occasionally semi-compound granules present. Walls of epidermal cells undulate; stomata subrounded, 44~52 μm in diameter, with 4~5 subsidiary cells, subsidiary cells contain striations. Spiral vessels up to 21 μm in diameter.

Thin layer chromatographic identification test (General rule 1010.3):

1. Sample solution: Add 1.0 g of powdered sample to 10 mL of methanol, ultrasonicate for 20 minutes, filter, and evaporate the filtrate to 1 mL.
2. Reference drug solution: Use 1.0 g of the reference drug as the same method described above.
3. Procedure: Use silica gel F_{254} as the coating substance and the supernatant of petroleum ether (30~60℃), ethyl acetate and formic acid (15:5:1) as the developing solvent. Apply 10 μL of each of the above solutions to the plate. Once the top of the solvent rise to about 5~10 cm from the origin, dry in air. Spray with a 10% solution of phosphomolybdic acid in ethanol (Phosphomolybdic Acid/EtOH TS), heat until the spots become visible. The spots in the chromatogram obtained from the sample solution correspond in R_f values and color to the spots in the chromatogram obtained from the reference drug solution.

Impurities and other requirements:

1. Loss on drying: Not more than 13.0% under heating at 105℃ for 5 hours (General rule 5008).
2. Total ash: Not more than 5.5% (General rule 5004).
3. Acid-insoluble ash: Not more than 1.0% (General rule 5004).
4. Sulfur dioxide: Not more than 500.0 ppm (General rule 3051).

Assay:

1. Water extractives: Carry out the method for determination of water extractives (General rule 5006).
2. Dilute ethanol extractives: Carry out the method for determination of dilute ethanol-soluble extractives (General rule 5006).

Storage: Refrigerate or store in a cool and dry place, and protect from mold and insects.
Usage: Tonifying and replenishing medicinal (Yin-tonifying medicinal).
Dosage: 6~12 g.

LINDERAE RADIX
烏藥
Wu Yao / Wu Yao
Combined Spicebush Root Tuber

Combined spicebush root tuber is the dried root tuber of *Lindera aggregata* (Sims) Kosterm. (Fam. Lauraceae).
It contains not less than 7.0% of dilute ethanol-soluble extractives and not less than 4.0% of water extractives.

Description: Cylindrical or fusiform, slightly curved, some constricted in the middle to be moniliform, commonly known as "Wu Yao Ju", 5~15 cm in length, 1~3 cm in diameter. Externally yellowish-brown, with longitudinal wrinkles and transverse striations, bark easily exfoliated, exposing fibrous wood. Texture hard, uneasily broken, fracture brownish-white, color of the center part dark, with radial rays and annual rings. Odor, aromatic; taste, slightly bitter and pungent, with a cooling sensation.

Microscopic identification:

1. **Transverse section:** Cork composed of 5~6 rows of cork cells, mostly broken. Cortex composed of 4~5 rows of subrounded parenchymatous cells, oil cells singly scattered or several in a group, suboblong, containing volatile oil droplets. Primary phloem indistinct, secondary phloem composed of sieve tubes, parenchymatous cells and phloem fibers, oil cells and phloem fibers present among the phloem, usually singly scattered and lignified, a few of lumina contain yellowish-brown contents. Cambium in a ring. Xylem occupied the major portion of the root, annual ring distinct; vessels mainly bordered-pitted, spiral and reticulate rare; xylem fibers pale yellow, with simple pits, lumen relatively large, wall relatively thin; xylem rays composed of 1~3 rows of parenchymatous cells, lignified, wall with simple pits. Parenchymatous cells contain numerous starch granules, oil droplets and yellow resin masses.
2. **Powder:** Pale brown. Starch granules extremely abundant, simple granules subrounded or ovate, 5~40 μm in diameter, hilum dotted or simple cleft-shaped, striations faintly visible; compound granules composed of 2~5 components. Phloem fibers usually singly scattered, long-subfusiform, 11~17 μm in diameter, with walls thickened and slightly lignified, pit canals indistinct, a few of lumina contain yellowish-brown contents. Bordered-pitted vessels 20~30 μm in diameter. Xylem fibers mostly in bundles, slender and mostly broken, 20~30 μm in diameter, walls thickened and with simple pits, lumen containing starch granules. Xylem rays with cells subsquare or subpolygonal, usually several rows overlapped, with relatively dense pits.

Thin layer chromatographic identification test (General rule 1010.3):

1. Sample solution: Add 1.0 g of powdered sample to 30 mL of petroleum ether (30~60℃) for 30 minutes, ultrasonicate for 10 minutes (keeping the water temperature lower than 30℃) then filter, evaporate the filtrate to dryness, dissolve the residue in 1 mL of ethyl acetate.
2. Reference drug solution: Use 1.0 g of the reference drug as the same method described above.
3. Reference standard solution: Weigh accurately a quantity of linderane and dissolve in ethyl acetate to produce a solution containing 0.75 mg per mL.
4. Procedure: Use silica gel F_{254} as the coating substance and a solution of toluene and ethyl acetate (15:1) as the developing solvent. Apply 4 μL of the sample solution and reference drug solution and 3 μL of the reference standard solution to the plate. Once the top of the solvent rise to about 5~10 cm from the origin, dry in air. Spray with a 1% solution of vanillin in sulfuric acid (Vanillin/H_2SO_4 TS), heat until the spots become visible, and examine under visible light. The spots in the chromatogram obtained from the sample solution correspond in R_f values and color to the spots in the chromatogram obtained from the reference drug solution and the reference standard solution.

Impurities and other requirements:

1. Loss on drying: Not more than 13.0% under heating at 105℃ for 5 hours (General rule 5008).
2. Total ash: Not more than 2.0% (General rule 5004).
3. Acid-insoluble ash: Not more than 1.0% (General rule 5004).

Assay:

1. Water extractives: Carry out the method for determination of water extractives (General rule 5006).
2. Dilute ethanol extractives: Carry out the method for determination of dilute ethanol-soluble extractives (General rule 5006).

Storage: Store in a cool and dry place, and protect from insects.
Usage: Qi-regulating medicinal.
Dosage: 3~9 g.

LIQUIDAMBARIS FRUCTUS
路路通
Lu Lu Tong / Lu Lu Tong
Beautiful Sweetgum Fruit

Beautiful sweetgum fruit is the dried ripe infructescence of *Liquidambar formosana* Hance (Fam. Hamamelidaceae).

Description: Collective fruit composed of numerous small capsules, spheroidal, 2~3 cm in diameter, with a short fruit stalk at the base, externally grayish-brown, bearing with numerous acute spines and small beaked obtuse spines, formed from persistent style and the calyx teeth around ovary, 0.5~1 cm in length, often broken. Small capsules split at apex, showing hollowed; seeds numerous, fine and flattened, pale brown, lustrous, often fallen. Texture light and hard, uneasily broken. Odor, slight; taste, weak.

Thin layer chromatographic identification test (General rule 1010.3):

1. Liquidambaric acid:
   (1) Sample solution: Add 2.0 g of powdered sample to 50 mL of ethyl acetate, ultrasonicate for 30 minutes, filter, and evaporate the filtrate to 2 mL. Apply the filtrate to a neutral alumina column (200～300 mesh, 2 g, 10 mm in inner diameter), elute with 25 mL of ethyl acetate, discard the elution solution, elute with 25 mL of 50% methanol, collect the eluates, evaporate to dryness, dissolve the residue in 1 mL of ethyl acetate.
   (2) Reference drug solution: Use 2.0 g of the reference drug as the same method described above.
   (3) Reference standard solution: Weigh accurately a quantity of liquidambaric acid and dissolve in ethyl acetate to produce a solution containing 1.0 mg per mL.
   (4) Procedure: Use silica gel F_{254} as the coating substance and a solution of toluene, ethyl acetate and formic acid (20:2:1) as the developing solvent, equilibrate for about 15 min. Apply 6 μL of each of the above solutions to the plate. Once the top of the solvent rise to about 5~10 cm from the origin, dry in air. Spray with a solution of vanillin in sulfuric acid (Vanillin/H_2SO_4 TS) and heat at 80℃ until the spots become visible. The spots in the chromatogram obtained from the sample solution correspond in R_f values and color to the spots in the chromatogram obtained from the reference drug solution and the reference standard solution.
2. Reference drug:
   (1) Sample solution: Add 1.0 g of powdered sample to 15 mL of methanol, ultrasonicate for 30 minutes, filter and use the filtrate.
   (2) Reference drug solution: Use 1.0 g of the reference drug as the same method described above.
   (3) Procedure: Use silica gel F_{254} as the coating substance and a solution of toluene, ethyl acetate and formic acid (20:2:1) as the developing solvent. Apply 10 μL of each of the above solutions to the plate. Once the top of the solvent rise to about 5~10 cm from the origin, dry in air. Spray with a solution of vanillin in a solution of sulfuric acid and methanol (Vanillin/H_2SO_4 MeOH TS), heat at 105℃ until the spots become visible. The spots in the chromatogram obtained from the sample solution correspond in R_f values and color to the spots in the chromatogram obtained from the reference drug solution.

Impurities and other requirements:

1. Total ash: Not more than 7.0% (General rule 5004).
2. Acid-insoluble ash: Not more than 3.0% (General rule 5004).

Storage: Store in a dry place.
Usage: Qi-regulating medicinal.
Dosage: 5~9 g.

LONICERAE FLOS
金銀花
Jin Yin Hua / Jin Yin Hua
Honeysuckle Flower Bud

Honeysuckle flower bud is the dried flower bud of *Lonicera japonica* Thunb., *Lonicera hypoglauca* Miq., *Lonicera confusa* DC. or *Lonicera dasystyla* Rehd. (Fam. Caprifoliaceae).
It contains not less than 22.0% of dilute ethanol-soluble extractives, not less than 24.0% of water extractives and not less than 1.0% of chlorogenic acid.

Description:

1. Flower bud of *Lonicera japonica*: Clavate, slender, slightly curved, 1.3~5.5 cm in length, stout in upper part, 2~3 mm in diameter. Externally pale yellow or yellowish-brown, gradually darken on keeping, with densely scabrous and long glandular. Calyx tiny, calyx tube subspheroidal, about 1 mm in length, glabrous, 5-lobed at the apex, lobes ovate-deltoid, pubescent. Corolla tubular, slight dehiscence at the apex, flowering occasionally, 2-lipped apex, about 5 cm in length; 5 stamens, epipetalous; 1 pistil, 1 style. Odor, delicately aromatic; taste, sweet and slightly bitter.
2. Flower bud of *Lonicera hypoglauca*: 1~5 cm in length, 0.8~2 mm in diameter. Externally yellowish-brown or brown. Calyx tube glabrous, lobes long triangle, pubescent. Corolla tubular nearly glabrous, tomentose or glandular. Odor, delicately aromatic; taste, sweet and slightly bitter.
3. Flower bud of *Lonicera confusa*: 1.3~5 cm in length, 0.5~2 mm in diameter. Externally reddish-brown or grayish-brown, with retrorse hirtellous and numerous glandular. Calyx lobes usually long triangle, length longer than the width, with densely grayish-white or pale yellow hispid. Odor, delicately aromatic; taste, sweet and slightly bitter.
4. Flower bud of *Lonicera dasystyla*: 2.5~4 cm in length, 1~2.5 mm in diameter. Externally pale yellow with slight purple, glabrous. Calyx lobes short triangle. Irregular corolla lip when flowering, the lower part of style densely pilose.

Microscopic identification:

1. **Transverse section:**
   (1) Flower bud of *Lonicera japonica*: Glandular hairs 2 types: first type with head obconical, apex flattened, 10~33 cells in lateral view,

arranged to 2~4 layers, 48~108 μm in diameter, stalk 1~5 celled, 70~700 μm in length; second type with head subrounded or rounded discoid, 4~20 celled, 30~64 μm in diameter, stalk 2~4 celled, 24~80 μm in length. Sclerenchymatous non-glandular hairs unicellular, 45~900 μm in length, 14~37 μm in diameter, walls 5~10 μm thick, slightly warty or bubble-shaped protuberance in surface, occasionally spiral striations visible. Parenchymatous non-glandular hairs unicellular, extremely long, curved or shrunken, slightly warty in surface. Clusters of calcium oxalate 6~45 μm in diameter, angles fine and acute. Pollen grains subrounded or rounded-triangular, with 3 pit canals, with dense short-spines and fine or granule-like striations on the surface.

(2) Flower bud of *Lonicera hypoglauca*: Glandular hairs with head peltate and large, 8~40 cells in top view, 60~176 μm in diameter, 7~10 cells in lateral view, arranged to 1~2 layers, 1 layer of cells slightly depressed on the top; stalk short, 1~4 celled, 5~48 μm in length, 22~40 μm in diameter. Sclerenchymatous non-glandular hairs unicellular, straight, a few hook-like curved, 38~1408 μm in length, warty in surface, occasionally spiral striations visible.

(3) Flower bud of *Lonicera confusa*: Glandular hairs with head obconical or rounded discoid, the apex dented or flattened, 20~100 cells in lateral view, arranged to 3~5 layers, 32~150 μm in diameter; stalk 2~5 celled, cells at the junction with the head extremely short, occasionally 2 cells paralleled, basal cells mostly thick and long. Sclerenchymatous non-glandular hairs unicellular, 32~848 μm in length, warty in surface, occasionally with single or double-helix striations. Basal hairs surrounded by upheaved epidermal cells.

(4) Flower bud of *Lonicera dasystyla*: Glandular hairs rare, with head cap-shaped, 10~18 cells in lateral view, arranged to 2 layers, 20~50 cells in top view, 65~160 μm in diameter, stalk extremely short, 4~9 cells paralleled; occasionally small glandular hairs present, with head 3~4 celled. Sclerenchymatous non-glandular hairs rare, occasionally 2 cells paralleled at the base, antlers-like separated at the upper part.

2. **Powder:**

(1) Flower bud of *Lonicera japonica*: Pale yellow. Glandular hairs 2 types: first type with head obconical, apex slightly flattened, 10~30 cells arranged to 2~4 layers, 52~130 μm in diameter, stalk 2~6 celled, 80~700 μm in length; second type with head inverted triangular, relatively small, composed of 4~20 cells, 30~80 μm in diameter, stalk 2~4 celled, 25~64 μm in length. The head cells of glandular hair contain yellowish-brown secretions. Non-glandular hairs unicellular with 2 types: first type long and curved, walls thin with slightly warty; second type relatively short, walls slightly thickened with warty on surface, occasionally with single or double-helix striations. Pollen grains abundant, yellow, spheroidal, 60~70 μm in diameter, short spine-like warty on the outer wall, with 3 germinal apertures. Epidermal cells of the stigma head villus-shaped. Parenchymatous cells contain fine clusters of calcium oxalate, 6~45 μm in diameter.

Thin layer chromatographic identification test (General rule 1010.3):

1. Sample solution: Add 0.5 g of powdered sample to 5 mL of methanol, ultrasonicate for 20 minutes then filter, evaporate the filtrate to 1 mL.
2. Reference drug solution: Use 0.5 g of the reference drug as the same method described above.
3. Reference standard solution: Weigh accurately a quantity of chlorogenic acid and dissolve in methanol to produce a solution containing 1.0 mg per mL.
4. Procedure: Use silica gel F_{254} as the coating substance and the supernatant of butyl acetate, formic acid and water (7:2.5:2.5) as the developing solvent. Apply 5 μL of each of the above solutions to the plate. Once the top of the solvent rise to about 5~10 cm from the origin, dry in air. Examine under the ultraviolet light at 366 nm. The spots in the chromatogram obtained from the sample solution correspond in R_f values and color to the spots in the chromatogram obtained from the reference drug solution and the reference standard solution.

Impurities and other requirements:

1. Loss on drying: Not more than 12.0% under heating at 105℃ for 5 hours (General rule 5008).
2. Total ash: Not more than 10.0% (General rule 5004).
3. Acid-insoluble ash: Not more than 5.0% (General rule 5004).
4. Lead (Pb): Not more than 5.0 ppm (General rule 3007, 3049, 3050).
5. Cadmium (Cd): Not more than 0.3 ppm (General rule 3049, 3050).
6. Mercury (Hg): Not more than 0.2 ppm (General rule 3049).
7. Arsenic (As): Not more than 2.0 ppm (General rule 3006, 3049, 3050).
8. Copper (Cu): Not more than 20.0 ppm (General rule 3049).

Assay:

1. Chlorogenic acid:
   (1) Mobile phase: A solution of methanol, water and formic acid (40:60:1). The ratio varies as required.
   (2) Reference standard solution: Place chlorogenic acid in a vacuum dryer at 50℃ until the weight constant. Weigh accurately 10 mg, transfer to a 50-mL volumetric flask, and dissolve in methanol to produce a 50 mL solution.
   (3) Sample solution: Place 2.0 g of sample in a dryer at 50℃ for 30 minutes, crush, pass through a 40-mesh sieve, bake for 90 minutes at 50℃. Weigh accurately 1.0 g of powdered sample, dissolve in 10 mL of methanol, macerate for 10 hours, ultrasonicate for 30 minutes, filter the residue, use the filtrate, and add methanol to volume.
   (4) Chromatographic system: The liquid chromatography is equipped with an ultraviolet absorption photometer (wavelength: 330 nm) and a column (4~6 mm × 15~25 cm) packed with octadecylsilanized silica gel. The column temperature is maintained at room temperature. The flow rate is about 1.0 mL/min.
   (5) Procedure: Inject accurately 10~20 μL of each of the reference standard solution and the sample solution into the liquid chromatography apparatus, and calculate the content.
2. Water extractives: Carry out the method for determination of water extractives (General rule 5006).
3. Dilute ethanol extractives: Carry out the method for determination of dilute ethanol-soluble extractives (General rule 5006).

Storage: Refrigerate or store in a cool and dry place, and protect from insects.
Usage: Heat-clearing medicinal (Heat-clearing and detoxcating medicinal).
Dosage: 6~30 g.

LONICERAE JAPONICAE CAULIS
忍冬藤
Ren Dong Teng / Ren Dong Teng
Japanese Honeysuckle Stem

Japanese honeysuckle stem is the dried stem and branch of *Lonicera japonica* Thunb. (Fam. Caprifoliaceae).
It contains not less than 13.0% of dilute ethanol-soluble extractives, not less than 6.0% of water extractives, not less than 0.10% of chlorogenic acid and not less than 0.10% of loganin.

Description: Slender cylindrical, 1.5~6 mm in diameter. Externally reddish-brown or dark red, nodes remained with leaf scars or branch scars, internodes 5~8 cm in length, with fine longitudinal wrinkles, old branches glabrous, young branches with pale yellow hairs. Outer bark often fallen off, with grayish-white inner surface. Texture hard, easily broken, fracture yellowish-white or grayish-white, fibrous, hollow in the pith. Leaves yellowish-green, usually broken. Odor, slight; taste, weak.

Microscopic identification:

1. **Transverse section:** Epidermis composed of 1 row of rectangular cells. Non-glandular hairs unicellular, walls thickened with warty protrusions. Cortex cells subsquare or polygonal, outer mostly composed of compressed parenchymatous cells, walls yellowish-brown, followed by 1~2 rows of large cortex fibers on the inner side, walls slightly thickened and lignified. Inside showing relatively small cortex cells, subsquare or oblong, 20~60 μm in diameter, parts of the cells formed cork, the cork cells elongated radially, occasionally curved, walls thin. Phloem contains clusters of calcium oxalate, occasionally with few fibers present. Cambium in a ring. Xylem well developed, vessels subrounded, 10~35 μm in diameter, mainly spiral, others as xylem fibers; xylem rays composed of 1~2 rows of cells, containing pits. Pith large with cells round, 10~50 μm in diameter, walls slightly lignified, hollowed in the center.
2. **Powder:** Brown. Epidermal cells rectangular. Non-glandular hairs unicellular with walls thickened. Cortex cells subsquare or subrounded, mostly shrunken, filled with yellowish-brown contents. Cortex fibers with walls slightly thickened and lignified, 5~25 μm in diameter. Phloem cells mostly compressed, containing clusters of calcium oxalate. Spiral vessels of xylem are visible, 10~50 μm in length, 10~35 μm in diameter. Pith cells round, 10~50 μm in diameter, walls slightly lignified.

Thin layer chromatographic identification test (General rule 1010.3):

1. Sample solution: Add 1.0 g of powdered sample to 5 mL of methanol, shake for 5 minutes, centrifuge and use the supernatant.
2. Reference drug solution: Use 1.0 g of the reference drug as the same method described above.
3. Reference standard solution: Weigh accurately 1.0 mg of chlorogenic acid and loganin and dissolve in 2 mL of methanol to produce a solution containing 0.5 mg per mL.
4. Procedure: Use silica gel F_{254} as the coating substance and a solution of ethyl acetate, water and formic acid (6:1:1) as the developing solvent. Apply 10 μL of each of the above solutions to the plate. Once the top of the solvent rise to about 5~10 cm from the origin, dry in air. Spray with a

solution of vanillin in sulfuric acid, heat at 105℃ for 5 minutes, and examine under visible light. The spots in the chromatogram obtained from the sample solution correspond in R_f values and color to the spots in the chromatogram obtained from the reference drug solution and the reference standard solution.

Impurities and other requirements:

1. Loss on drying: Not more than 9.0% under heating at 105℃ for 5 hours (General rule 5008).
2. Total ash: Not more than 4.0% (General rule 5004).
3. Acid-insoluble ash: Not more than 1.0% (General rule 5004).

Assay:

1. Chlorogenic acid:
   (1) Mobile phase: A solution of acetonitrile and 0.4% phosphoric acid (10:90). The ratio varies as required.
   (2) Reference standard solution: Weigh accurately a quantity of chlorogenic acid and dissolve in 50% methanol to produce a solution containing 40 μg per mL.
   (3) Sample solution: Weigh accurately 1.0 g of powdered sample, transfer to a conical flask with stopper, add accurately 25 mL of 50% methanol, weigh, ultrasonicate for 30 minutes, cool, weigh again, replenish the loss of the weight with 50% methanol, mix well and filter, use the successive filtrate.
   (4) Chromatographic system: The liquid chromatography is equipped with an ultraviolet absorption photometer (wavelength: 327 nm) and a column packed with octadecylsilanized silica gel. The number of theoretical plates of the peak of chlorogenic acid should not be less than 1,000.
   (5) Procedure: Inject accurately 10 μL of the reference standard solution and 5~10 μL of the sample solution into the liquid chromatography apparatus, and calculate the content.
2. Loganin:
   (1) Mobile phase: A solution of acetonitrile and 0.4% phosphoric acid (12:88). The ratio varies as required.
   (2) Reference standard solution: Weigh accurately a quantity of loganin and dissolve in 50% methanol to produce a solution containing 40 μg per mL.
   (3) Sample solution: Weigh accurately 1.0 g of powdered sample, transfer to a conical flask with stopper, add accurately 25 mL of 50% methanol, weigh, ultrasonicate for 30 minutes, cool, weigh again, replenish the loss of the weight with 50% methanol, mix well and filter, use the successive filtrate.
   (4) Chromatographic system: The liquid chromatography is equipped with an ultraviolet absorption photometer (wavelength: 236 nm) and a column packed with phenyl silane bonded silica gel. The number of theoretical plates of the peak of loganin should not be less than 3,000.
   (5) Procedure: Inject accurately 10 μL of the reference standard solution and 2~10 μL of the sample solution into the liquid chromatography apparatus, and calculate the content.
3. Water extractives: Carry out the method for determination of water extractives (General rule 5006).
4. Dilute ethanol extractives: Carry out the method for determination of dilute ethanol-soluble extractives (General rule 5006).

Storage: Store in a cool and dry place, and protect from moisture.
Usage: Heat-clearing medicinal (Heat-clearing and detoxcating medicinal).
Dosage: 9~30 g.

LOPHATHERI CAULIS ET FOLIUM
淡竹葉
Dan Jhu Ye / Dan Zhu Ye
Common Lophatherum Culm and Leaf

Common lophatherum culm and leaf is the dried culm and leaf of *Lophatherum gracile* Brongn. (Fam. Gramineae).
It contains not less than 9.0% of dilute ethanol-soluble extractives and not less than 10.0% of water extractives.

Description: Leaf blades crumpled, 3~22 cm in length, 1~3.5 cm in width, externally pale yellowish-green, veins parallel, bearing lateral veinlets, more distinct on the lower surface, both surfaces scattered with sparse tomenta. Culms pale yellow, cylindrical, about 25~60 cm in height, about 1 mm in diameter, with nodes scattered with leaf sheaths, fracture hollowed. Texture light. Odor, slight; taste, weak.

Microscopic identification:

1. **Transverse section:**
   (1) Leaf blades: Upper epidermis composed of 1 layer of subrectangular cells, varying in size, the cells near fibers relatively small, about 8 μm in diameter and length; the cells far away from fibers relatively large, linked vertically into fan-shaped, about 88 μm in diameter and length, the outer periclinal walls cutinized. Lower epidermal cells relatively small, arranged neatly, subrectangular, anticlinal walls curved, the outer periclinal walls cutinized. Stomata and unicellular non-glandular hairs mostly presented in

lower epidermis. Mesophyll composed of palisade tissue and spongy tissue. Palisade tissue composed of 1~2 rows of short columnar cells, arranged neatly; spongy tissue composed of 2~4 rows of parenchymatous cells, cell walls slightly curved. Vascular bundles in closed collateral type, subrounded by 1~2 rows of subrounded fibers, xylem vessels rare, with 1~3 rows of fibers between the phloem and xylem, xylem located above phloem, vessels subrounded; phloem cells relatively small, subrounded or elongated-rounded.

2. **Powder:** Pale grayish-green. Stomata and non-glandular hairs mostly presented in the lower epidermis, upper epidermis rare, non-glandular hairs usually singly scattered, mostly unicellular, subsickle-shaped curved. Stomata mainly presented in the lower epidermis, numerous, subsidiary cells slender, dumbbell-shaped. Fibers mostly in bundles, slender, about 7~25 μm in diameter, about 450 μm in length, with indistinct pit canals. Vessels mainly spiral.

Identification:

1. Check steroids: Add 1.0 g of powdered sample to 20 mL of ethanol, ultrasonicate for 1 hour, and filter. Weigh accurately 5 mL of the filtrate, evaporate the filtrate to dryness, dissolve the residue in 1 mL of acetic anhydride, and add 1~2 drops of concentrated sulfuric acid, a red color is produced and turns to purplish-red, bluish-purple and dark green gradually.

Impurities and other requirements:

1. Loss on drying: Not more than 11.0% under heating at 105℃ for 5 hours (General rule 5008).
2. Total ash: Not more than 12.0% (General rule 5004).
3. Acid-insoluble ash: Not more than 7.0% (General rule 5004).

Assay:

1. Water extractives: Carry out the method for determination of water extractives (General rule 5006).
2. Dilute ethanol extractives: Carry out the method for determination of dilute ethanol-soluble extractives (General rule 5006).

Storage: Refrigerate or store in a cool and dry place, and protect from mold and insects.
Usage: Heat-clearing medicinal (Heat-clearing and fire-purging medicinal).
Dosage: 6~12 g.

LYCII FRUCTUS
枸杞子
Gou Ci Zih / Gou Qi Zi
Wolfberry Fruit

Wolfberry fruit is the dried ripe fruit of *Lycium chinense* Mill. or *Lycium barbarum* L. (Fam. Solanaceae).
It contains not less than 35.0% of dilute ethanol-soluble extractives and not less than 40.0% of water extractives.

Description: Narrowly ovate or ellipsoid, 10~20 mm in length, 3~8 mm in diameter. Externally red or dark red, with irregular wrinkles, slightly lustrous, apex with a protuberant stylopodium, with a white and dented scar of fruit stalk at the other end. Texture pliable, sarcocarp fleshy, viscous. Seeds 25~50, flattened reniform, up to 2.5 mm in length, up to 2 mm in width, brownish-yellow, with some fine dented dots, hilum at the dented edge. Odor, slight; taste, sweet and slightly sour.

Microscopic identification:

1. **Transverse section:**
   (1) Pericarp: Exocarp composed of 1 layer of cells, lateral wall thickened, unlignified or slightly lignified, covered with cuticle, the margin serrate-shaped. Mesocarp composed of over 10 layers of cells, containing abundant orange-red pigment granules, occasionally containing sandy crystals of calcium oxalate; vascular bundles bicollateral, numerous, arranged in a ring, vessels small and rare. Endocarp composed of 1 layer of cells, subrounded or elongated tangentially, arranged undulately. Parenchymatous tissue of septum and axial placentation scattered with vascular bundles, some vascular bundles with numerous vessels.
2. **Powder:** Yellowish-orange or dark red. Stone cells of testa flaky, irregularly polygonal or long-polygonal in surface view, anticlinal walls undulated or wave-curved, 37~117 μm in diameter, up to 196 μm in length, wall 5~27 μm thick; subsquare or flattened-square in sectional view, lateral and inner walls thickened, inner wall slightly curved, outer wall mucilaginous. Exocarp cells subpolygonal in surface view, anticlinal walls wave-curved or straight, the outer periclinal walls with dense and parallel cuticle striations. Sandy crystals of calcium oxalate filled in mesocarp parenchymatous cells, a few of small prisms present. Parenchymatous cells of mesocarp contain orange-red or reddish-brown pigment granules. Endosperm cells contain fatty oil droplets and aleurone grains.

Thin layer chromatographic identification test (General rule 1010.3):

1. Sample solution: Add 1.0 g of powdered sample to 10 mL of methanol, ultrasonicate for 30 minutes, filter and make up the filtrate to 10 mL.
2. Reference drug solution: Use 1.0 g of the reference drug as the same method described above.
3. Procedure: Use silica gel F_{254} as the coating substance and a solution of toluene and acetone (4:1) as the developing solvent. Apply 5 μL of each of the above solutions to the plate. Once the top of the solvent rise to about 5~10 cm from the origin, dry in air. Examine under the ultraviolet light at 365 nm. The spots in the chromatogram obtained from the sample solution correspond in R_f values and color to the spots in the chromatogram obtained from the reference drug solution.

Impurities and other requirements:

1. Total ash: Not more than 5.0% (General rule 5004).
2. Acid-insoluble ash: Not more than 2.0% (General rule 5004).
3. Aflatoxins: Not more than 15.0 ppb (General rule 3053).

Assay:

1. Water extractives: Carry out the method for determination of water extractives (General rule 5006).
2. Dilute ethanol extractives: Carry out the method for determination of dilute ethanol-soluble extractives (General rule 5006).

Storage: Refrigerate or store in a cool and dry place, and protect from hot, moisture and insects.
Usage: Tonifying and replenishing medicinal (Yin-tonifying medicinal).
Dosage: 6~15 g.

LYCII RADICIS CORTEX
地骨皮
Di Gu Pi /Di Gu Pi
Wolfberry Rootbark

Wolfberry rootbark is the dried bark of root of *Lycium chinense* Mill. or *Lycium barbarum* L. (Fam. Solanaceae). It contains not less than 8.0% of dilute ethanol-soluble extractives and not less than 10.0% of water extractives.

Description: Quilled, channeled or irregular quills, 0.5~2 cm in diameter, 1~3 mm thick. Outer surface brownish-yellow to grayish-yellow, rough, with irregularly longitudinal fissures, easily exfoliated to scaly. Inner surface yellowish-white or grayish-yellow, with fine longitudinal striations. Texture light and fragile, fracture two layers, outer layers (cork) thick, brownish-yellow, inner layers grayish-white. Odor, slight; taste, sweetish and then bitter.

Microscopic identification:

1. **Transverse section:** Rhytidome relatively thick; inside showing cork, arranged in a complete ring. Phloem occupied about half portion of the bark of root, phloem rays 1~2 rows of cells wide. Parenchymatous cells contain starch granules, occasionally containing sandy crystals of calcium oxalate. Fibers singly scattered or few in bundles; occasionally stone cells present.
2. **Powder:** Pale yellow. Sandy crystals of calcium oxalate scattered, some parenchymatous cells filled with sandy crystals, forming sandy crystal sacs. Fibers usually connected with ray cells, fusiform in shape, 110~230 μm in length, 17~48 μm in diameter, walls 3~11 μm thick, lignified or slightly lignified, containing sparsely oblique pits, some lumen contains yellowish-brown contents. Individual starch subrounded or ovate, 5~22 μm in diameter; compound granules composed of 2~8 components. Occasionally with subrounded, fusiform or subrectangular stone cells, cork cells and parenchymatous cells of cork.

Thin layer chromatographic identification test (General rule 1010.3):

1. Sample solution: Add 1.0 g of powdered sample to 5 mL of 70% methanol, ultrasonicate for 30 minutes, filter, add 70% methanol to 5 mL, and use the filtrate.
2. Reference drug solution: Use 1.0 g of the reference drug as the same method described above.
3. Reference standard solution: Weigh accurately a quantity of scopoletin and scopolin and dissolve in 70% methanol to produce a solution containing 0.2 mg per mL of each.
4. Procedure: Use silica gel F_{254} as the coating substance and a solution of *n*-butanol, water and acetic acid (7:2:1) as the developing solvent. Apply 10 μL of each of the above solutions to the plate. Once the top of the solvent rise to about 5~10 cm from the origin, dry in air. Examine under the ultraviolet light at 365 nm. The spots in the chromatogram obtained from the sample solution correspond in R_f values and color to the spots in the chromatogram obtained from the reference drug solution and the reference standard solution.

Impurities and other requirements:

1. Loss on drying: Not more than 14.0% under heating at 105℃ for 5 hours (General rule 5008).
2. Total ash: Not more than 15.0% (General rule 5004).
3. Acid-insoluble ash: Not more than 5.0% (General rule 5004).
4. Total heavy metals: Not more than 10.0 ppm (General rule 3005).
5. Arsenic (As): Not more than 5.0 ppm (General rule 3006, 3049, 3050).

Assay:
1. Water extractives: Carry out the method for determination of water extractives (General rule 5006).
2. Dilute ethanol extractives: Carry out the method for determination of dilute ethanol-soluble extractives (General rule 5006).

Storage: Store in a dry place, and protect from mold and insects.
Usage: Heat-clearing medicinal (Deficiency heat-clearing medicinal).
Dosage: 9~15 g.

LYCOPI HERBA
澤蘭
Ze Lan / Ze Lan
Hiraute Shiny Bugleweed Herb

Hiraute shiny bugleweed herb is the dried aerial herb of *Lycopus lucidus* Turcz. var. *hirtus* Regel or *Lycopus lucidus* Turcz. (Fam. Labiatae).
It contains not less than 14.0% of dilute ethanol-soluble extractives and not less than 14.0% of water extractives.

Description:
1. *Lycopus lucidus* var. *hirtus*: Stems square, shallowly furrowed longitudinally on four sides, 50~100 cm in length, 0.2~0.6 cm in diameter; externally yellowish-green or slightly purplish, nodes apparently purple, internode 2~11 cm; texture fragile, easily broken, fracture yellowish-white, pith hollowed. Leaves opposite, lamina mostly crumpled, lanceolate or oblong as whole, margin serrate; the upper surface blackish-green, the lower surface grayish-green and densely glandular-dotted, pubescent on both surfaces. Vertisillaster axillary, corolla mostly fallen off, bracts and calyx persistent. Odor, slight; taste, weak.
2. *Lycopus lucidus*: Stem and leaves relatively smooth, and the other characters simile to *Lycopus lucidus* var. *hirtus*.

Microscopic identification:
1. **Transverse section:**
   (1) Stem: Epidermis composed of 1 row of cells, non-glandular hairs occasionally visible. 8~10 rows of collenchymatous cells located at angular regions and 2~3 rows of collenchymatous cells present beneath epidermis. Pericyclic fiber bundles arranged in an interrupted ring. Cortex cells subrounded, size varies. Vascular bundles collateral. Xylem vessels scattered singly or in groups, arranged radially. Pith mainly composed of parenchymatous cells.
2. **Powder:** Brown. Lower epidermal cells polygonal or irregular in shape. Unicellular non-glandular hairs mostly present in main and lateral vein. Glandular hairs present in lower epidermis, the head composed of 1~2 cells, the stalk unicellular. Vessels pitted and spiral. Fibers slender. Subsidiary cells diacytic.

Thin layer chromatographic identification test (General rule 1010.3):
1. Sample solution: Add 5.0 g of powdered sample to 20 mL of *n*-hexane, ultrasonicate for 1 hour, filter, evaporate the filtrate to dryness, and dissolve the residue in 1 mL of *n*-hexane.
2. Reference drug solution: Use 5.0 g of the reference drug as the same method described above.
3. Reference standard solution: Weigh accurately a quantity of ursolic acid and dissolve in absolute ethanol to produce a solution containing 0.5 mg per mL.
4. Procedure: Use silica gel F_{254} as the coating substance and a solution of *n*-hexane, dichloromethane, ethyl acetate and formic acid (20:5:8:0.1) as the developing solvent. Apply 5 μL of each of the above solutions to the plate. Once the top of the solvent rise to about 5~10 cm from the origin, dry in air. Spray with a 10% solution of sulfuric acid in ethanol (H_2SO_4/EtOH TS), heat at 105℃ until the spots become visible. The spots in the chromatogram obtained from the sample solution correspond in R_f values and color to the spots in the chromatogram obtained from the reference drug solution and the reference standard solution.

Impurities and other requirements:
1. Loss on drying: Not more than 14.0% under heating at 105℃ for 5 hours (General rule 5008).
2. Total ash: Not more than 10.0% (General rule 5004).
3. Acid-insoluble ash: Not more than 3.0% (General rule 5004).

Assay:
1. Water extractives: Carry out the method for determination of water extractives (General rule 5006).
2. Dilute ethanol extractives: Carry out the method for determination of dilute ethanol-soluble extractives (General rule 5006).

Storage: Store in a ventilated and dry place.
Usage: Blood-activating and stasis-dispelling medicinal.
Dosage: 6~12 g.

LYCOPODII HERBA
伸筋草
Shen Jin Cao / Shen Jin Cao
Common Clubmoss Herb

Common clubmoss herb is the dried herb of *Lycopodium japonicum* Thunb. (Fam. Lycopodiaceae).

Description: Stolon slender cylindrical, slightly curved, up to 2 m in length, 3~5 mm in diameter, with numerous yellowish-white rootlets underneath. Erect stems bifurcated. Leaves densely growing on the stems, arranging spirally, crumpled and curved, linear-lanceolate, 3~5 mm in length, yellowish-green to pale yellowish-brown, glabrous, aristate at the apex, margin entire or serrate, veins indistinct. Sporangium rare, often broken. Texture soft, fracture pale yellow in bark and whitish in wood. Odor, slight; taste, weak.

Microscopic identification:

1. **Transverse section:**
   (1) Stem: Epidermis composed of 1 layer of cells covered with cuticle. Cortex relatively broad; sclerenchymatous tissue composed of 1~10 layers of cells, arranged in a ring below epidermis and stele, the walls gradually thickened and lignified from outer to inner, scattered with leaf-trace vascular bundles. Endodermis distinct. Pericycle composed of parenchymatous cells. Xylem divided into irregular stripes, arranging parallelly and alternately with phloem; phloem cells polygonal, the cells relatively small near xylem cells.
2. **Powder:** Yellowish-green. Epidermal cells subrounded or elliptical, the outer walls slightly thickened and lignified. Walls of parenchymatous cells thin, cells subrounded or oblong. Sclerenchymatous cells subrounded or elliptical, fibers relatively small and oblong, 15~50 μm in diameter. Endodermal cells long-polygonal. Tracheids extremely long, 10~50 μm in diameter, polygonal or elliptical, extremely lignified, mainly scalariform, spiral few. Simple starch granules elliptical, subrounded or polygonal.

Thin layer chromatographic identification test (General rule 1010.3):

1. Sample solution: Add 5.0 g of powdered sample to 30 mL of ethyl ether, immerse for 3 hours, filter, evaporate the filtrate to dryness, and dissolve the residue in 1 mL of absolute ethanol.
2. Reference drug solution: Use 5.0 g of the reference drug as the same method described above.
3. Procedure: Use silica gel F_{254} as the coating substance and a solution of petroleum ether (30~60 ℃) and ethyl acetate (5:3) as the developing solvent. Apply 5 μL of each of the above solutions to the plate. Once the top of the solvent rise to about 5~10 cm from the origin, dry in air. Spray with a 10% solution of sulfuric acid in ethanol (H_2SO_4/EtOH TS) and heat at 105℃ for 5 minutes. Examine under visible light. The spots in the chromatogram obtained from the sample solution correspond in R_f values and color to the spots in the chromatogram obtained from the reference drug solution.

Storage: Store in a dry place.
Usage: Wind-dampness-dispelling medicinal.
Dosage: 3~12 g.

LYGODII SPORA
海金沙
Hai Jin Sha / Hai Jin Sha
Lygodium Spore

Lygodium spore is the dried ripe spore of *Lygodium japonicum* (Thunb.) Sw. (Fam. Lygodiaceae).
It contains not less than 3.0% of dilute ethanol-soluble extractives.

Description: Powder, brownish-yellow or yellowish-brown. Externally smooth, texture light, float on the water, sank after heated. Crack and bright flame when burned. Odor, slight; taste, weak.

Microscopic identification:

1. **Transverse section:** Spores brownish-yellow or pale yellow, tetrahedral or triangular conical, tri-phase conical in top view, subtriangular in lateral view, subrounded in bottom view, 55~90 μm in diameter, with granular sculptures in outer walls.
2. **Powder:** Yellowish-brown. Spores with warty or smooth surface. Multicellular non-glandular hairs mostly broken, 120~600 μm in length and 20~50 μm in diameter. Wall cells of sporangium undulately curved, containing yellowish-brown contents. Girdle band cells of sporangium composed of several lignified cells, containing yellow contents.

Thin layer chromatographic identification test (General rule 1010.3):

1. Sample solution: Add 2.0 g of powdered sample to 20 mL of methanol, ultrasonicate for 30 minutes, evaporate to dryness, and dissolve the residue in 2 mL of methanol.
2. Reference drug solution: Use 2.0 g of the reference drug as the same method described above.
3. Procedure: Use silica gel F_{254} as the coating substance and a solution of petroleum ether (30~60 ℃), ethyl acetate and methanol (15:3:1) as the developing solvent. Apply 10 μL of each of the above solutions to the plate. Once the top of the solvent rise to about 5~10 cm from the origin, dry in air. Spray with a 10% solution of sulfuric acid in ethanol (H_2SO_4/EtOH TS), heat at 105℃ for 2

minutes, and examine under the ultraviolet light at 365 nm. The spots in the chromatogram obtained from the sample solution correspond in R_f values and color to the spots in the chromatogram obtained from the reference drug solution.

Impurities and other requirements:

1. Loss on drying: Not more than 7.0% under heating at 105℃ for 5 hours (General rule 5008).
2. Acid-insoluble ash: Not more than 12.0% (General rule 5004).

Assay:

1. Dilute ethanol extractives: Carry out the method for determination of dilute ethanol-soluble extractives (General rule 5006).

Storage: Store in a cool and dry place, and protect from moisture.
Usage: Dampness-dispelling medicinal (Dampness-draining medicinal).
Dosage: 6~15 g.

LYSIMACHIAE HERBA
金錢草
Jin Cian Cao / Jin Qian Cao
Longhairy Antenoron Herb

Longhairy antenoron herb is the dried herb of *Lysimachia christinae* Hance (Fam. Primulaceae).
It contains not less than 7.0% of dilute ethanol-soluble extractives, not less than 5.0% of water extractive and not less than 0.10% of the total amount of quercetin and kaempferol.

Description: Frequently twisted into masses, glabrous or sparsely pubescent. Stems twisted, externally brown or dark brownish-red, with longitudinally wrinkles, the lower part of stem nodes occasionally with rootlets, fracture solid. Leaves opposite, mostly crumpled, broadly ovate or cordate as whole, 1~4 cm in length, 1~5 cm in width, base slightly concave, margin entire; the upper surface grayish-green or brown, the lower surface pale in color, midrib distinctly protuberant, after soaking in water, the black or brown stripes visible under the light; petioles 1~4 cm in length. Some with flowers, yellow, solitary in leaf axis, with long petioled. Capsules globose. Odor, slight; taste, weak.

Microscopic identification:

1. **Transverse section:**
   (1) Stem: Epidermis covered with cuticle, occasionally glandular hairs present, with head unicellular and 1~2 celled stalk. Cortex broad, cells occasionally containing reddish-brown contents, scattered with secretory canals, composed of 5~10 secretory cells, containing reddish-brown lumpy secretions. Endodermis distinct. Pericyclic fibers arranged in an interrupted ring, walls slightly lignified. Phloem narrow. Cambium indistinct. Xylem arranged in a ring. Pith usually hollow, parenchymatous cells contain starch granules.
   (2) Leaf: Glandular hairs reddish-brown, with head unicellular, subrounded, about 25 μm in diameter, stalk unicellular. Secretory canals scattered in mesophyllous tissue, about 45 μm in diameter, containing reddish-brown secretions. For sparsely pubescent ones, non-glandular hairs visible on the surface of stems and leaves, 1~17 celled, straight or curved, some cells shrunken, 59~1,070 μm in length, 13~53 μm in diameter at the base, finely striated on the surface, containing yellowish-brown contents.
2. **Powder:** Grayish-yellow. Starch granules abundant, simple granules subrounded, semicircular or helmet-shaped, 4~22 μm in diameter, hilum cleft-shaped, dotted rare; compound granules rare, composed of 2~3 components. Glandular hairs usually broken, with only 1 head cell or with broken stalk cells; head cells usually filled with reddish-yellow secretions, 18~42 μm in diameter, occasionally fragments of non-glandular hairs present. Epidermal cells with curved anticlinal walls, fine striations and round cicatrix from fallen off of glandular hairs, containing reddish-brown contents. Lower epidermis with anticlinal walls curved, stomata anisocytic or anomocytic. Fragments of parenchymatous cells occasionally contain reddish-brown masses or long strip-shaped contents. Fibers extremely long, with large and lignified lumen. Vessels mainly spiral, reticulate or pitted, 15~28 μm in diameter.

Thin layer chromatographic identification test (General rule 1010.3):

1. Sample solution: Add 1.0 g of powdered sample to 50 mL of 80% methanol, heat under reflux for 1 hour, cool then filter, evaporate the filtrate to dryness, dissolve the residue in 10 mL of water, extract by shaking with two 10-mL quantities of ethyl ether, and discard the ethyl ether solutions. To the water solution add 10 mL of dilute hydrochloric acid, place in a water bath for 1 hour, cool immediately, extract shaking twice each with 20 mL of ethyl acetate, combine the ethyl acetate extracts, wash with 30 mL of water, discard the washing. Evaporate the ethyl acetate extract to dryness, dissolve the residue in 1 mL of methanol.
2. Reference drug solution: Use 1.0 g of the reference drug as the same method described above.
3. Reference standard solution: Weigh accurately a quantity of quercetin and kaempferol and dissolve in methanol to produce a solution containing 0.5 mg per mL of each.
4. Procedure: Use silica gel F_{254} as the coating substance and a solution of toluene, ethyl and

formic acid (10:8:1) as the developing solvent. Apply 5 μL of the sample solution and reference drug solution and 2 μL of each of the reference standard solution to the plate. Once the top of the solvent rise to about 5~10 cm from the origin, dry in air. Spray with a 3% solution of aluminum chloride in ethanol ($AlC1_3$/EtOH TS), heat at 105 ℃ for several minutes, and examine under the ultraviolet light at 365 nm. The spots in the chromatogram obtained from the sample solution correspond in R_f values and color to the spots in the chromatogram obtained from the reference drug solution and the reference standard solution.

Impurities and other requirements:

1. Loss on drying: Not more than 11.0% under heating at 105℃ for 5 hours (General rule 5008).
2. Total ash: Not more than 13.0% (General rule 5004).
3. Acid-insoluble ash: Not more than 5.0% (General rule 5004).

Assay:

1. Quercetin and kaempferol:
   (1) Mobile phase: A solution of methanol and 0.4% phosphoric acid (50:50). The ratio varies as required.
   (2) Reference standard solution: Weigh accurately a quantity of quercetin and kaempferol and dissolve in 80% methanol to produce a solution containing 4 μg and 20 μg per mL of each.
   (3) Sample solution: Weigh accurately 1.5 g of powdered sample, transfer to a conical flask with stopper, add accurately 50 mL of 80% methanol, stopper tightly and weigh, heat under reflux for 1 hour, cool, weigh again, replenish the loss of the weight with 80% methanol, and mix well. Filter and transfer 25 mL of successive filtrate, add accurately 5 mL of hydrochloric acid, place in a water bath at 90℃ for 1 hour, cool immediately, transfer to a 50-mL volumetric flask, add 80% methanol to volume and mix well.
   (4) Chromatographic system: The liquid chromatography is equipped with an ultraviolet absorption photometer (wavelength: 360 nm) and a column packed with octadecylsilanized silica gel. The number of theoretical plates of the peak of quercetin should not be less than 2,500.
   (5) Procedure: Inject accurately 10 μL of each of the reference standard solution and the sample solution into the liquid chromatography apparatus, and calculate the content.
2. Water extractives: Carry out the method for determination of water extractives (General rule 5006).
3. Dilute ethanol extractives: Carry out the method for determination of dilute ethanol-soluble extractives (General rule 5006).

Storage: Store in a dry place.
Usage: Dampness-draining diuretic medicinal.
Dosage: 15~60 g.

MAGNOLIAE CORTEX
厚朴
Hou Pu / Hou Pu
Magnolia Bark

Magnolia bark is the dried bark of trunk, root or branch of *Magnolia officinalis* Rehd. et Wils. or *Magnolia officinalis* Rehd. et Wils. var. *biloba* Rehd. et Wils. (Fam. Magnoliaceae).
It contains not less than 4.5% of dilute ethanol-soluble extractives, not less than 4.0% of water extractive and not less than 0.8% of magnolol.

Description:

1. Bark of trunk: Singly or double quilled or slices, 30~35 cm in length, 2~7 mm thick, commonly known as "Tong Po", near the root with one end spread out like a bell, 13~25 cm in length, 3~8 mm thick, commonly known as "Xue Tong Po". Outer surface grayish-brown, rough, cork easily exfoliated to scaly, with distinct elliptical lenticels and longitudinal wrinkles, appearing yellowish-brown when the coarse bark peeled; inner surface relatively smooth, purplish-brown or dark purplish-brown, with fine and dense longitudinal striations, exhibiting oily trace on scratching. Texture hard, uneasily broken, outer fracture grayish-brown, granular, inner fracture purplish-brown or brown, oily, occasionally with numerous small bright spots (crystal of magnolol). Odor, aromatic; taste, bitter and pungent.
2. Bark of root (Gen Po): Singly quilled or irregular slices, some broken after splitting, some curved like chicken intestines, commonly known as "Ji Chang Po", 18~32 cm in length, 1~3 mm thick. Externally grayish-brown, with transverse striations and longitudinal wrinkles. Texture hard, uneasily broken, fracture fibrous. More residues after chewing. The other characters same as bark of trunk.
3. Bark of branch (Zhi Po): Bark thin, quilled singly, 10~20 cm in length, 1~2 mm thick. Externally grayish-brown, with wrinkles. Texture fragile hard, easily broken, fracture fibrous. More residues after chewing. The other characters same as bark of trunk.

Microscopic identification:

1. **Transverse section:** Cork composed of several layers of cells, with suberized and slightly lignified wall, rhytidome tissue present. The outer side of

cortex showing a ring of stone cells composed of several layers of tangentially elongated stone cells, cells rectangular or elongated-rounded, 7~65 μm in diameter; the inner side scattered with numerous stone cell groups, stone cells mostly branched, fiber bundles rare; inside scattered with elongated tangentially oblong oil cells, with wall slightly thickened. Phloem occupied the most part of the cortex, rays broad, 1~3 rows of cells wide, gradually broad from inside to outside, phloem fiber bundles abundant, with walls extremely thickened, oil cells numerous, singly scattered or 2~5 linked. Parenchymatous cells contain yellowish-brown contents or filled with starch granules, after processing, starch granules mostly gelatinized, a few of prisms of calcium oxalate occasionally found.

2. **Powder:**
   (1) *Magnolia officinalis*: Brownish-yellow. Stone cells abundant, elongated-rounded or subsquare, 11~65 μm in diameter, some large one irregularly branched, branches short and obtuse-rounded or long and acute, occasionally lignified striations visible. Fibers 15~32 μm in diameter, wall extremely thickened and straight, lignified pit canals indistinct. Oil cells round or oblong, 50~85 μm in diameter, containing yellowish-brown oily contents, cell wall lignified. Cork cells polygonal, with thin and slightly curved walls. Compound sieve plate of sieve tubes with relatively large sieve area, sieve pits distinct. Prisms of calcium oxalate rarely present and gelatinized or ungelatinized fragments of starch granules.
   (2) *Magnolia officinalis* var. *biloba*: With fibers serrate at one side; oil cells 27~75 μm in diameter, wall unlignified or lignified; cork cells with wall extremely thin and straight, usually layers overlapped; starch granules round, 3~10 μm in diameter.

Thin layer chromatographic identification test (General rule 1010.3):

1. Sample solution: Add 1.0 g of powdered sample to 10 mL of methanol, shake for 10 minutes, centrifuge and use the supernatant.
2. Reference drug solution: Use 1.0 g of the reference drug as the same method described above.
3. Procedure: Use silica gel F_{254} as the coating substance and a solution of *n*-butanol, water and glacial acetic acid (4:2:1) as the developing solvent. Apply 5 μL of each of the above solutions to the plate. Once the top of the solvent rise to about 5~10 cm from the origin, dry in air. Spray with modified Dragendorff's reagent and examine under visible light. The spots in the chromatogram obtained from the sample solution correspond in R_f values and color to the spots in the chromatogram obtained from the reference drug solution.

Impurities and other requirements:

1. Loss on drying: Not more than 12.0% under heating at 105℃ for 5 hours (General rule 5008).
2. Total ash: Not more than 7.0% (General rule 5004).
3. Acid-insoluble ash: Not more than 4.0% (General rule 5004).

Assay:

1. Magnolol:
   (1) Mobile phase: A solution of water, acetonitrile and glacial acetic acid (50:50:1). The ratio varies as required.
   (2) Reference standard solution: Place magnolol in a silicone dryer for more than 1 hour. Weigh accurately 10.0 mg and dissolve in dilute methanol (7 in 10) to produce a 100 mL solution.
   (3) Sample solution: Weigh accurately 0.5 g of powdered sample, dissolve in a 40 mL solution of dilute methanol (7 in 10), ultrasonicate for 30 minutes, add dilute methanol (7 in 10) to 100 mL.
   (4) Chromatographic system: The liquid chromatography is equipped with an ultraviolet absorption photometer (wavelength: 289 nm) and a column (4~6 mm × 15~25 cm) packed with octadecylsilanized silica gel (5~10 μm in particle diameter). The column temperature is maintained at room temperature. The retention time of magnolol is about 14 minutes. Inject reference standard solution into the liquid chromatography apparatus for five times, and record the peak areas. The relative standard deviation of the peak area of magnolol should not be more than 1.5%.
   (5) Procedure: Inject accurately 10 μL of each of the reference standard solution and the sample solution into the liquid chromatography apparatus, and calculate the content.
2. Water extractives: Carry out the method for determination of water extractives (General rule 5006).
3. Dilute ethanol extractives: Carry out the method for determination of dilute ethanol-soluble extractives (General rule 5006).

Storage: Refrigerate or store in a cool and dry place.
Usage: Qi-regulating medicinal.
Dosage: 3~10 g.

MAGNOLIAE FLOS
辛夷
Sin Yi / Xin Yi
Magnolia Flower Bud

Magnolia flower bud is the dried flower bud of *Magnolia biondii* Pamp., *Magnolia denudata* Desr. or *Magnolia sprengeri* Pamp. (Fam. Magnoliaceae).
It contains not less than 10.0% of dilute ethanol-soluble extractives, not less than 11.0% of water extractives, not less than 1.0% (v/w) of volatile oil and not less than 0.40% of magnolin.

Description:

1. Flower bud of *Magnolia biondii*: Long ovate or like the tip of a writing brush, 1.2~2.6 cm in length, 0.7~1.5 cm in diameter. Mostly the base with a lignify and short pedicel, about 5 mm in length, externally yellowish-green or yellowish-brown, exhibiting whitish dotted lenticels. Bracts 2~3 layers, each layer 2 segments, bearing small scaly buds between 2 layers of bracts, outer surface of bract densely covered with grayish-yellow, grayish-white tomenta, inner surface brownish, glabrous, inner bract relatively thin. Perianth-segments 9, brownish-yellow, outer ones 3, stripe-shaped, about 1/4 in length of the inner ones, inner ones 6, arranged in 2 whorls of 3. Stamens and pistils numerous, spirally arranged. Texture light and fragile. Odor, aromatic; taste, pungent, with a cooling sensation, slightly bitter.
2. Flower bud of *Magnolia denudata*: 1.5~3.3 cm in length, 1~1.5 cm in diameter. Pedicels stout at the base, 4~8 mm in diameter, lenticels pale brown. Outer surface of bract densely covered with grayish-white or grayish-green tomenta. Perianth-segments 9, outer whorls and inner whorls homogeneous.
3. Flower bud of *Magnolia sprengeri*: 2~4.3 cm in length, 0.5~2 cm in diameter. Pedicels stout at the base, 0.6~1 cm in diameter, lenticels red-brown. Outer surface of bract densely covered with pale yellowish-brown or pale yellowish-green tomenta, occasionally the outer bracts appearing brown after the hairs fallen off. Perianth-segments 10~12, less differentiated between the outer and inner whorls.

Microscopic identification:

1. **Transverse section:**
   (1) Peduncle: Epidermal cells one row, resembling as stone cells, mostly differentiated to form non-glandular hairs. The non-glandular hairs composed of 1~3 cells. A few groups of oil cells and stone cells are found in the cortex. Stone cells subrounded, fusiform or irregular, 34~206 μm in length, 16~99 μm in diameter, occasionally with striations. Vascular bundles arranged in a ring. A few groups of oil cells and stone cells are also found in the pith.
2. **Powder:** Grayish-green or pale yellowish-green. Non-glandular hairs numerous, with 2 types, first type is unicellular hairs, 14~19 μm in diameter, walls extremely thickened, the base occasionally lined with epidermal cells; second type is multicellular hairs, composed of 3~5 cells, up to about 4500 μm in length, 32~35 μm in diameter, the 1~2 basal cells extremely short, subsquare, 16~32 μm in length, slightly shrunken, occasionally surrounded by over 10 epidermal cells aggregated into spheroidal, the head cells extremely long, walls 10~14 μm thick; more hairs showing obvious spiral striations or overlapping double-helix. Branched stone cells extremely numerous, varying in size, terminal at branchlets tapering or blunt, walls 5~10 μm thick, some with distinct striations, pit canals fine. Oil cells extremely numerous, subrounded or oblong, walls thin and occasionally slightly shrunken, 48~115 μm in diameter.

Thin layer chromatographic identification test (General rule 1010.3):

1. Sample solution: Add 1.0 g of powdered sample to 10 mL of methanol, heat under reflux for 30 minutes, cool, filter and make up the filtrate to 10 mL.
2. Reference drug solution: Use 1.0 g of the reference drug as the same method described above.
3. Reference standard solution: Weigh accurately a quantity of magnolin and dissolve in methanol to produce a solution containing 1.0 mg per mL.
4. Procedure: Use silica gel F_{254} as the coating substance and a solution of dichloromethane and ethyl ether (5:1) as the developing solvent. Apply 5 μL of each of the above solutions to the plate. Once the top of the solvent rise to about 5~10 cm from the origin, dry in air. Spray with a 10% solution of sulfuric acid in ethanol (H_2SO_4/EtOH TS), heat at 105℃ until the spots become visible. The spots in the chromatogram obtained from the sample solution correspond in R_f values and color to the spots in the chromatogram obtained from the reference drug solution and the reference standard solution.

Impurities and other requirements:

1. Loss on drying: Not more than 12.0% under heating at 105℃ for 5 hours (General rule 5008).
2. Total ash: Not more than 5.0% (General rule 5004).
3. Acid-insoluble ash: Not more than 1.5% (General rule 5004).

Assay:

1. Magnolin:
   (1) Mobile phase: A solution of acetonitrile, tetrahydrofuran and water (35:1:64). The ratio varies as required.
   (2) Reference standard solution: Weigh accurately a quantity of magnolin and dissolve in methanol to produce a solution containing 0.1 mg per mL.
   (3) Sample solution: Weigh accurately 1.0 g of powdered sample, transfer to a conical flask with stopper, add accurately 20 mL of ethyl acetate, weigh, macerate for 30 minutes, ultrasonicate for 30 minutes, cool, weigh again, replenish the loss of the weight with methanol, and mix well. Filter and measure accurately 3 mL of successive filtrate, transfer to the pretreated neutral aluminium oxide column (100~200 mesh, 2.0 g, 9 mm in internal diameter, filled with the neutral aluminium oxide using wet method, washed previously with 5 mL of ethyl acetate). Elute with 15 mL of methanol, collect the elute in a 25-mL volumetric flask; add methanol to volume and mix well, filter and use the successive filtrate.
   (4) Chromatographic system: The liquid chromatography is equipped with an ultraviolet absorption photometer (wavelength: 278 nm) and a column packed with octyl-functionalized silica gel. The number of theoretical plates of the peak of magnolin should not be less than 9,000.
   (5) Procedure: Inject accurately 4~10 µL of each of the reference standard solution and the sample solution into the liquid chromatography apparatus, and calculate the content.
2. Water extractives: Carry out the method for determination of water extractives (General rule 5006).
3. Dilute ethanol extractives: Carry out the method for determination of dilute ethanol-soluble extractives (General rule 5006).
4. Volatile oil: Carry out the method for determination of volatile oil (General rule 5007).

Storage: Refrigerate or store in a cool and dry place.
Usage: Exterior-releasing medicinal (Wind-cold dispersing medicinal).
Dosage: 3~10 g.

MALVAE FRUCTUS
冬葵果
Dong Kuei Guo / Dong Kui Guo
Cluster Mallow Fruit

Cluster mallow fruit is the dried ripe fruit of *Malva verticillata* L. (Fam. Malvaceae).

Description: Oblate-orbiculate, 4~7 mm in diameter, covered with a membranous persistent calyx. Persistent calyx campanulate, yellowish-green or yellowish-brown, occasionally purplish, 5-cleft at the apex, segments curved inwards, 3 strip-lanceolate bractlets present outside, fruit stalk thin and short. Fruit 10~12 valves, surrounding a conical axis arranged in a whorl, mericarps suboblate, 1.4~2.5 mm in diameter, externally yellowish-white or yellowish-brown, with protuberant annulate fine lines. Seed reniform, brownish-yellow or blackish-brown. Odor, slight; taste, astringent.

Microscopic identification:

1. **Transverse section:**
   (1) Surface view of persistent calyx: Stellate hairs of lower epidermis composed of 2~8 cells, mostly in 4~8 cells, individual cell about 50~1140 µm in length, 75 µm in diameter, slightly thick-walled; heads of glandular hairs elliptical composed of 5~7 cells, 25~38 µm in diameter. Unicellular non-glandular hairs of upper epidermis slender, curved or straight, up to 1190 µm in length, with thin or slightly thickened wall. Anisocytic stomata on both surfaces.
   (2) Pericarp: Exocarp composed of 1 layer of rectangular epidermal cells with slightly thickened walls, covered with cuticle. Mesocarp composed of 2~3 layers of subrounded parenchymatous cells and 1 layer of cells containing calcium oxalate, large mucilage cells scattered in parenchymatous tissue, crystal-containing cells subrounded, walls thickened and lignified. Over 10 fiber bundles arranged in a ring between mesocarp and endocarp. Endocarp composed of 1 row of radially elongated stone cells, palisade-like, with extremely thickened and lignified lateral and inner wall.
2. **Powder:** Yellowish-brown. Stellate hairs composed of 2~8 cells, mostly in 4~8 cells, individual cell about 50~1,140 µm in length, 75 µm in diameter, slightly thick-walled; heads of glandular hairs elliptical, composed of 5~7 cells, 25~38 µm in diameter. Unicellular non-glandular hairs slender, curved or straight, up to 1,190 µm in length, with thin or slightly thickened wall. Stomata anisocytic. Clusters of calcium oxalate existed in parenchymatous cells of mesophyll, 6~25 µm in diameter, with relatively large angles. Endosperm cells exist in pieces, polygonal or subsquare, 11~35 µm in diameter, walls thickened unevenly, slightly chain-like, walls of mesolayer occasionally indistinct. Palisade cells of testa composed of 1 row of columnar cells in lateral view, mostly in bundles, 33~46 µm in length, 8~12 µm in diameter, with extremely thickened and lignified walls; lumen fusiform, containing fine-spherical crystals. Pigment cells subpolygonal

or subrectangular, lumen containing reddish-brown masses. Epidermal cells of cotyledon rectangular, parenchymatous cells subpolygonal or oblong, cells containing crystalloids.

Thin layer chromatographic identification test (General rule 1010.3):

1. Sample solution: Add 1.0 g of powdered sample to 70% ethanol, heat under reflux for 2 hours, filter, evaporate the filtrate to dryness, and dissolve the residue in 10 mL of methanol. Apply 2 mL of the supernatant to an octadecylsilane bonded silica gel solid phase extraction column for chromatography, elute with 5 mL of water, and collect the eluate.
2. Reference drug solution: Use 1.0 g of the reference drug as the same method described above.
3. Reference standard solution: Weigh accurately a quantity of caffeic acid and dissolve in methanol to produce a solution containing 1.0 mg per mL.
4. Procedure: Use polyamide as the coating substance and a solution of methanol, water and glacial acetic acid (3:2:0.1) as the developing solvent. Apply 20 μL of each of the sample solution and reference drug solution and 4 μL of reference standard solution to the plate. Once the top of the solvent rise to about 5~10 cm from the origin, dry in air. Examine under ultraviolet light at 365 nm. The spots in the chromatogram obtained from the sample solution correspond in R_f values and color to the spots in the chromatogram obtained from the reference drug solution and the reference standard solution.

Storage: Refrigerate or store in a cool and dry place.
Usage: Dampness-draining diuretic medicinal.
Dosage: 3~10 g.

MANTIDIS OÖTHECA
桑螵蛸
Sang Piao Siao / Sang Piao Xiao
Mantis Egg-case

Mantis egg-case is the dried egg capsule of *Tenodera sinensis* Saussure, *Statilia maculata* Thunb. or *Hierodula patellifera* Serville (Fam. Mantidae).
It contains not less than 4.0% of dilute ethanol-soluble extractives and not less than 4.0% of water extractives.

Description:

1. Tuan Piao Xiao *(Tenodera sinensis)*: Subcylindrical or in masses, 2.5~4 cm in length, 2~3 cm in width, 1.5~2 cm thick, consisting of many layers of thin overlapping memberanous slices. Externally pale yellowish-brown or yellowish-brown, with indistinct protuberant, the bottom even or grooved. Texture light, tenacious, fracture yellowish-brown, the outer part spongy, the inner part with 15~20 radially arranged egg chambers, each side arranged 16~19 rows of ellipsoidal eggs, egg shell reddish-brown, consisting of yellowish-brown egg, lustrous. Odor, slightly stinking; taste, slightly salty.
2. Chang Piao Xiao *(Statilia maculata)*: Slat-shaped, 2.5~5 cm in length, 1~1.5 cm in width, 1 cm thick. Externally grayish-yellow, with upward oblique striations, the upper part with ribbon-like ridge, each side of the ridge with one brown shallow groove, the bottom even or grooved. Texture hard and fragile, fracture with 13~14 radially arranged egg chambers, egg ellipsoidal, yellowish-brown, lustrous. Odor, slightly stinking.
3. Hei Piao Xiao *(Hierodula patellifera)*: Tetragonal, 2~3.5 cm in length, 1~1.5 cm in width, 1~1.5 cm thick. Externally blackish-brown, with upward oblique striations, the upper part with ribbon-like ridge, the bottom slightly curved. Texture hard and fragile, fracture with 14~20 radially arranged egg chambers, egg ellipsoidal, yellowish-brown, lustrous. Odor, slightly stinking.

Microscopic identification:

1. **Powder:** Yellow. The outer layer spongy, both the outer and inner layer contain fiber-shaped structures and subrounded cavities, containing crystals. Egg cells contain fats and yolk grains.

Identification:

1. Check protein: Take 2.0 g of powdered sample, add 20 mL of water, boil for 10 minutes, and filter. Take 2 mL of the filtrate, add 3~4 drops of 0.2% ninhydrin solution, boil for 5 minutes, a purplish-blue color is produced.

Impurities and other requirements:

1. Loss on drying: Not more than 14.0% under heating at 105℃ for 5 hours (General rule 5008).
2. Total ash: Not more than 7.0% (General rule 5004).
3. Acid-insoluble ash: Not more than 4.0% (General rule 5004).

Assay:

1. Water extractives: Carry out the method for determination of water extractives (General rule 5006).
2. Dilute ethanol extractives: Carry out the method for determination of dilute ethanol-soluble extractives (General rule 5006).

Storage: Store in a cool and dry place, and protect from moisture.
Usage: Astringent medicinal.
Dosage: 1.5~6 g.

MENTHAE HERBA
薄荷
Bo He / Bo He
Peppermint Herb

Peppermint herb is the dried aerial part of *Mentha haplocalyx* Briq. and the similar species (Fam. Labiatae). It contains not less than 9.0% of dilute ethanol-soluble extractives, not less than 10.0% of water extractives and not less than 0.8% (v/w) of volatile oil.

Description: Stems square, with opposite branches, up to about 90 cm in length, 2~8 mm in diameter; externally purplish-brown or pale green, with nodes, internodes 2~5 cm in length, the angular regions pubescent; texture fragile, fracture white, pith often hollowed. Leaves opposite, lamina rolled and crumpled, both surfaces pubescent and with dotted glandular scales. Verticillaster axillary, calyx mostly persistent. Odor, characteristic and aromatic after rubbing the leaves; taste, pungent and cool.

Microscopic identification:

1. **Transverse section:**
   (1) Leaf: Upper epidermal cells rectangular; lower epidermal cells small and flat, with stomata; glandular scales (flat-globular glandular hairs) located at sunken spaces of both upper and lower epidermis. Palisade tissue composed of 1 layer of cells, occasionally 2-layered; spongy tissue composed of 4~7 layers of cells, mesophyll contains needle cluster shaped hesperidin crystals, mostly present in palisade tissue. Vascular bundles of main vein collateral, xylem vessels usually 2~4 arranged in rows, phloem cells small. Collenchymatous cells present inside upper and lower epidermis of main vein. Parenchymatous cells and vessels occasionally contain hesperidin crystals. Glandular scales with head 8-celled in surface view, up to about 90 μm in diameter, the stalk unicellular; small glandular hairs with head and stalk unicellular. Non-glandular hairs composed of 1~8 layers of cells, usually curved, wall thickened with warty protuberance. Stomata mostly present in lower epidermis, diacytic.
   (2) Stem: Epidermal cells rectangular, with hairs and glandular scales. Cortex composed of 4~6 layers of parenchymatous cells, arranged sparsely; collenchyma tissue located at angular regions of stem; endodermis distinct. Phloem extremely thin, cells usually shrunken. Cambium in a ring. Xylem specially developed at angular regions of stem, vessels arranged radially, mainly bordered-pitted, and scattered with xylem fibers. Rays varying in width. Parenchymatous cells of pith large, usually hollowed in the center.
2. **Powder:** Pale yellowish-green. Epidermal cells of leaf with anticlinal walls curved; lower epidermis with diacytic stomata. Glandular scales with subrounded head, 8-celled, 61~99 μm in diameter; the stalk extremely short. Small glandular hairs with head unicellular, oblong, 15~26 μm in diameter, the stalk 1- to 2-celled. Non-glandular hairs 1- to 8-celled, slightly curved, some nodular-shaped, 10~43 μm in diameter, up to about 792 μm in length, wall 2~7 μm thick, warty protuberance slightly fine. Epidermal cells of stem subrectangular or subpolygonal, with longitudinal cutinized striations. Hesperidin crystals present in epidermal cells of stem and leaf, and parenchymatous cells, pale yellow, slightly fan-shaped or irregular, radial striations faintly visible. Vessels and xylem fibers also visible.

Thin layer chromatographic identification test (General rule 1010.3):

1. Sample solution: Add 1.0 g of powdered sample to 10 mL of methanol, ultrasonicate for 30 minutes, filter and use the filtrate.
2. Reference drug solution: Use 1.0 g of the reference drug as the same method described above.
3. Procedure: Use silica gel F_{254} as the coating substance and a solution of toluene, acetone and water (4:1:1) as the developing solvent. Apply 5 μL of each of the above solutions to the plate. Once the top of the solvent rise to about 5~10 cm from the origin, dry in air. Spray a solution of *p*-anisaldehyde in sulfuric acid (*p*-Anisaldehyde/ H_2SO_4 TS), heat at 105℃ for 5 minutes. Examine under the ultraviolet light at 365 nm. The spots in the chromatogram obtained from the sample solution correspond in R_f values and color to the spots in the chromatogram obtained from the reference drug solution.

Impurities and other requirements:

1. Total ash: Not more than 11.0% (General rule 5004).
2. Acid-insoluble ash: Not more than 3.0% (General rule 5004).

Assay:

1. Water extractives: Carry out the method for determination of water extractives (General rule 5006).
2. Dilute ethanol extractives: Carry out the method for determination of dilute ethanol-soluble extractives (General rule 5006).
3. Volatile oil: Carry out the method for determination of volatile oil (General rule 5007).

Storage: Refrigerate or store in a cool and dry place, and not store too long.
Usage: Exterior-releasing medicinal (Wind-heat dispersing medicinal).

Dosage: 3~10 g, decocted later.

MERETRICIS ET CYCLINAE CONCHA
蛤殼
Ge Ke / Ge Ke
Clam Shell

Clam shell is the dried shell of *Meretrix meretrix* L. or *Cyclina sinensis* Gmelin (Fam. Veneridae).

Description:

1. Shell of *Meretrix meretrix*: Fan-like or triangular; the dorsal margin somewhat triangular; the ventral margin arch-like, 3~10 cm in length, 2~8 cm in height, 1.5~2.5 mm thick. Externally yellowish-brown or grayish-white, umbo protuberant near the front of the dorsal side, with distinct brown or silver-gray undulated growth lines nearly umbo or all. The inner surface whitish or slightly greenish-purple, lustrous, ventral margin smooth, without tooth-like stripes. The hinge rather wide. The right shell with three cardinal teeth and two front lateral teeth; the left shell with three cardinal teeth and one front lateral tooth. Texture hard and heavy, fracture with laminated stripes. Odorless; taste, weak.
2. Shell of *Cyclina sinensis*: Subrounded, 3~5 cm in length and height, 1~1.5 mm thick. Externally yellowish-white or greenish-white, umbo protuberant near the center of the dorsal side, the concentric growth lines projected from the shell, somewhat like circular ribs, arranged densely, margin slight purple. The inner surface white or pale pink, smooth, the margin with neat small teeth, ventral margin one smaller and dorsal margin gradually thick. Both the right and left shells with three cardinal teeth, but no lateral tooth at the hinge. Texture hard and slightly fragile, fracture with laminated stripes indistinct. Odorless; taste, weak.

Microscopic identification:

1. **Transverse section:**
   (1) Shell of *Meretrix meretrix*: The shell striations slightly curved, 5~10 μm in width, between each striation 20~90 μm; criss-cross striations fine and small.
   (2) Shell of *Cyclina sinensis*: The shell striations 15~30 μm in width, between each striation 15~100 μm. Striation margins composed of two striations arranged neatly are found under microscope of high magnification.
2. **Powder:** Calcium carbonate white, containing gravel-like yellow fluorescence. Porcelain white and fine particles scattered with a few of brownish-yellow or purplish-black particles.

Identification:

1. Take a quantity of powdered sample, add dilute hydrochloric acid, a lot of bubbles is produced; filter and the filtrate show the result consistent with the reaction of calcium salt.

Storage: Store in a ventilated and dry place.
Usage: Phlegm-dispelling medicinal (Heat-phlegm clearing and resolving medicinal).
Dosage: 6~15 g, wrap-boiled.

MOMORDICAE FRUCTUS
羅漢果
Luo Han Guo / Luo Han Guo
Grosvenor Momordica Fruit

Grosvenor momordica fruit is the dried ripe fruit of *Momordica grosvenori* Swingle (Fam. Cucurbitaceae).
It contains not less than 25.0% of dilute ethanol-soluble extractives and not less than 25.0% of water extractives.

Description: Spheroidal or ellipsoidal, 4~7 cm in diameter. Externally yellowish-brown or brown, lustrous, pubescent, occasionally with dark longitudinal wrinkles. The center of apex with persistent stylopodium, base with fruit stalk. Texture light and fragile, easily broken, fracture yellowish-white, lax as spongy. Mesocarp and endocarp spongy, pale brown. Seeds numerous, flattened spheroidal, brownish-red, 1.5~2 cm in length, 0.7~1.5 cm in width, 3~4 mm thick, dented in the center, margin relatively thick, surround with radical furrows, containing 2 cotyledons. Odor, slight; taste, sweet.

Microscopic identification:

1. **Transverse section:**
   (1) Pericarp: Exocarp composed of 1 row of epidermal cells, covered with cuticle, 4~12 μm thick, multicellular non-glandular hairs or its scars occasionally visible. On the outer side of mesocarp showing 4~6 rows of subrounded parenchymatous cells, inside mesocarp showing stone cell layer, composed of 6~9 rows of stone cells, subrounded, subsquare or polygonal. Vascular bundles bicollateral. Endocarp composed of 1 row of parenchymatous cells.
   (2) Seed: Epidermis composed of 1 row of palisade tissue, 200~280 μm in length, 10~30 μm in width; inside showing several layers of sclerenchymatous fibers and large stone cell layer, arranged in a ring near seed. Endodermis composed of 1 row of flatten cells. Endosperm composed of 1~2 rows of cells. Cotyledon cells contain fatty oil droplets.
2. **Powder:** Yellowish-brown or brown. Palisade cells covered with cuticle, about 300 μm in length. Parenchymatous cells subrounded or irregular polygonal, with single pits. Stone cells abundant, stone cells of pericarp mostly in groups, yellow, square or ovate, 7~40 μm in diameter, wall

thickened, with distinct pit canals; stone cells of testa subsquare, wall thin with pits. Fibers fusiform, 20~53 μm in length, 13~16 μm in diameter, lumen relatively large, with distinct wall pits. Vessels mainly spiral and scalariform. Non-glandular hairs composed of 6~10 cells, 150~450 μm in length, 30~40 μm in diameter, lumens contain brown contents.

Thin layer chromatographic identification test (General rule 1010.3):

1. Sample solution: Add 2.0 g of powdered sample to 20 mL of dilute ethanol, heat under reflux for 30 minutes, filter, evaporate the filtrate to 5 mL, extract for two times, each time with 10 mL and 5 mL of *n*-butanol, combine the *n*-butanol extracts and evaporate to dryness, dissolve the residue in 0.5 mL of methanol.
2. Reference drug solution: Use 2.0 g of the reference drug as the same method described above.
3. Procedure: Use silica gel F_{254} as the coating substance and a solution of *n*-butanol, ethanol and water (8:2:3) as the developing solvent. Apply 10 μL of each of the above solutions to the plate. Once the top of the solvent rise to about 5~10 cm from the origin, dry in air. Spray with a 2% solution of vanillin in a solution of 10% sulfuric acid and ethanol (Vanillin /H_2SO_4/EtOH TS) and heat at 105℃ until the spots become visible. Examine under the visible light. The spots in the chromatogram obtained from the sample solution correspond in R_f values and color to the spots in the chromatogram obtained from the reference drug solution.

Impurities and other requirements:

1. Loss on drying: Not more than 15.0% under heating at 105℃ for 5 hours (General rule 5008).
2. Total ash: Not more than 5.0% (General rule 5004).
3. Acid-insoluble ash: Not more than 2.0% (General rule 5004).

Assay:

1. Water extractives: Carry out the method for determination of water extractives (General rule 5006).
2. Dilute ethanol extractives: Carry out the method for determination of dilute ethanol-soluble extractives (General rule 5006).

Storage: Store in a cool and dry place, and protect from moisture and insects.
Usage: Phlegm-dispelling, cough-suppressing and panting-calming medicinal.
Dosage: 9~15 g.

MORI FOLIUM
桑葉
Sang Ye / Sang Ye
Mulberry Leaf

Mulberry leaf is the dried leaf of *Morus alba* L. (Fam. Moraceae).
It contains not less than 15.0% of dilute ethanol-soluble extractives, not less than 15.0% of water extractives and not less than 0.10% of rutin.

Description: Mostly crumpled and broken, oval as whole, 8~15 cm in length, 6~12 cm in width, margin serrate, base rounded or cordate, apex acuminate. Upper surface yellowish-green or yellowish-brown, slightly lustrous, occasionally with protuberance, sparsely pubescent on the veins. Lower surface relatively light in color, pale yellow, lateral veins reticulate and protuberant, pubescent. Texture fragile, easily broken. Odor, slight; taste, weak, slightly bitter and astringent.

Microscopic identification:

1. **Transverse section:** Upper epidermis with 1 row of cells, covered with cuticle, cells large, polygonal, 15~30 μm in diameter, large cells with cystoliths, and the outer wall slightly protruded. Unicellular glandular hairs and non-glandular hairs visible. Lower epidermis with 1 row of flat and relatively small cells, with numerous stomata. Main vein protuberant downwards, containing collateral vascular bundles; collenchymatous tissue scattered in the outer part of vascular bundles, cells relatively small, phloem narrow, xylem crescent-shaped, spiral vessels present, 5~12 μm in diameter. Parenchymatous cells filled with abundant prisms and clusters of calcium oxalate. Palisade tissue 1~2 rows, arranged densely, cells square or subrounded, 25~35 μm in length and 2~6 μm in width. Spongy tissue with cells subrounded or polygonal, 5~10 μm in diameter.
2. **Powder:** Yellowish-green or yellowish-brown. Upper epidermal cells polygonal, 50 μm in diameter, anticlinal walls straight, containing crystals of calcium oxalate. Lower epidermal cells relatively small, stomata numerous, with 4~6 subsidiary cells. Epidermal cells containing cystoliths subrounded, 30~60 μm in diameter, surrounded by epidermal cells arranging radially. Non-glandular hairs mostly unicellular, usually broken. Glandular hairs rare, composed of multicellular head and unicellular stalk. Clusters of calcium oxalate scattered in mesophyll; prisms of calcium oxalate scattered in parenchymatous cells. Laticiferous tubes also present, 7~15 μm in diameter, containing yellow secretions.

Thin layer chromatographic identification test (General rule 1010.3):

1. Sample solution: Add 1.0 g of powdered sample to 10 mL of ethanol, ultrasonicate for 30 minutes, cool, filter and make up the filtrate to 10 mL.
2. Reference drug solution: Use 1.0 g of the reference drug as the same method described above.
3. Procedure: Use silica gel F_{254} as the coating substance and a solution of *n*-hexane, ethyl acetate and acetone (5:2:1) as the developing solvent. Apply 5 μL of each of the above solutions to the plate. Once the top of the solvent rise to about 5~10 cm from the origin, dry in air. Examine under the ultraviolet light at 365 nm. The spots in the chromatogram obtained from the sample solution correspond in R_f values and color to the spots in the chromatogram obtained from the reference drug solution.

Impurities and other requirements:

1. Loss on drying: Not more than 14.0% under heating at 105℃ for 5 hours (General rule 5008).
2. Total ash: Not more than 13.0% (General rule 5004).
3. Acid-insoluble ash: Not more than 5.0% (General rule 5004).

Assay:

1. Rutin:
   (1) Mobile phase: A solution of methanol as the mobile phase A, and a solution of 0.5% phosphoric acid as the mobile phase B.
   (2) Reference standard solution: Weigh accurately a quantity of rutin and dissolve in methanol to produce a solution containing 0.1 mg per mL.
   (3) Sample solution: Weigh accurately 1.0 g of powdered sample, transfer to a round-bottom flask, add 50 mL of methanol, heat under reflux for 30 minutes, filter, extract the residue with 50-mL quantities of methanol twice and combine the filtrates. Recover the solvent in vacuum, dissolve the residue in methanol, transfer to a 25-mL volumetric flask, add methanol to volume, mix well, filter and use the successive filtrate.
   (4) Chromatographic system: The liquid chromatography is equipped with an ultraviolet absorption photometer (wavelength: 358 nm) and a column packed with octadecylsilanized silica gel. Program the chromatographic system as follows. The number of theoretical plates of the peak of rutin should not be less than 5,000.

Time (min)	Mobile phase A (%)	Mobile phase B (%)
0~5	30	70
5~10	30→35	70→65
10~15	35→40	65→60
15~18	40→50	60→50

   (5) Procedure: Inject accurately 10 μL of each of the reference standard solution and the sample solution into the liquid chromatography apparatus, and calculate the content.
2. Water extractives: Carry out the method for determination of water extractives (General rule 5006).
3. Dilute ethanol extractives: Carry out the method for determination of dilute ethanol-soluble extractives (General rule 5006).

Storage: Store in a cool and dry place, and protect from moisture.
Usage: Pungent-cold exterior-releasing medicinal.
Dosage: 3~9 g.

MORI RADICIS CORTEX
桑白皮
Sang Bai Pi / Sang Bai Pi
Mulberry Rootbark

Mulberry rootbark is the dried bark of root without cork of *Morus alba* L. (Fam. Moraceae).
It contains not less than 5.0% of dilute ethanol-soluble extractives and not less than 5.0% of water extractives.

Description: Twisted quilled or flat pieced, 1.5~4 mm thick. Outer surface milky-white, even, occasionally remained with reddish-brown cork, inner surface yellowish-white or pale yellowish-brown, with fine longitudinal striations. Texture hard, fracture milky-white, strongly fibrous, easily stripped longitudinally. Taste, slightly sweet.

Microscopic identification:

1. **Transverse section:** Phloem rays distinct, 3~6 rows of cells wide; phloem scattered with laticiferous tubes; fibers abundant, singly scattered or in bundles, wall thick, unlignified or slightly lignified; stone cells usually grouped with crystal-containing sclerenchymatous cells. Parenchymatous cells contain starch granules, some containing prisms of calcium oxalate.
2. **Powder:** Pale grayish-yellow. Fibers numerous, colorless, extremely long, straight or slightly curved, with wavy edge, 13~31 μm in diameter, with wall extremely thickened, unlignified or slightly lignified. Laticiferous tubes up to about 57 μm in diameter, containing extremely fine granular

secretions. Stone cells pale yellow or yellowish-brown, subrounded, subsquare, subpolygonal or short-fusiform, 24~52 μm in diameter, with walls relatively thickened or extremely thickened, pits mostly distinct, pit canals with branches. Crystal-containing sclerenchymatous cells subrounded or rounded-triangular, up to about 48 μm in diameter, wall lignified and thickened unevenly, containing prisms of calcium oxalate, 11~32 μm in diameter. Simple starch granules subspheroidal or oblong, 2~16 μm in diameter; compound granules composed of 2~8 components.

Thin layer chromatographic identification test (General rule 1010.3):

1. Sample solution: Add 2.0 g of powdered sample to 20 mL of saturated solution of sodium carbonate, ultrasonicate for 20 minutes, filter and adjust the pH value of the filtrate to 1~2 with dilute hydrochloric acid, stand for 30 minutes, and filter. Extract the filtrate with two 10-mL quantities of ethyl acetate, combine the ethyl acetate extracts and evaporate to dryness. Dissolve the residue in 1 mL of methanol.
2. Reference drug solution: Use 2.0 g of the reference drug as the same method described above.
3. Procedure: Use polyamide as the coating substance and acetic acid as the developing solvent. Apply 5 μL of each of the above solutions to the plate. Once the top of the solvent rise to about 5~10 cm from the origin, dry in air. Examine under the ultraviolet light at 365 nm. The spots in the chromatogram obtained from the sample solution correspond in R_f values and color to the spots in the chromatogram obtained from the reference drug solution.

Impurities and other requirements:

1. Loss on drying: Not more than 14.0% under heating at 105℃ for 5 hours (General rule 5008).
2. Total ash: Not more than 12.0% (General rule 5004).
3. Acid-insoluble ash: Not more than 2.0% (General rule 5004).
4. Total heavy metals: Not more than 10.0 ppm (General rule 3005).
5. Arsenic (As): Not more than 5.0 ppm (General rule 3006, 3049, 3050).

Assay:

1. Water extractives: Carry out the method for determination of water extractives (General rule 5006).
2. Dilute ethanol extractives: Carry out the method for determination of dilute ethanol-soluble extractives (General rule 5006).

Storage: Store in a ventilated and dry place, and protect from moisture and insects.

Usage: Phlegm-dispelling medicinal (Cough-suppressing and panting-calming medicinal).
Dosage: 6~12 g.

MORI RAMULUS
桑枝
Sang Jhih / Sang Zhi
Mulberry Twig

Mulberry twig is the dried twig of *Morus alba* L. (Fam. Moraceae).
It contains not less than 2.0% of dilute ethanol-soluble extractives.

Description: Long cylindrical, branched less, varying in length, 0.5~1.5 cm in diameter. Externally grayish-yellow to grayish-brown, with numerous pale brown dotted lenticels and fine longitudinal striations, with grayish-white and slightly semicircular leaf scars and brownish-yellow budlets. Texture tenacious, uneasily broken, fracture yellowish-white, fibrous. Slices 2~5 mm thick, bark relatively thin, wood with radial striations, pith white, spongy. Odor, slight; taste, weak.

Microscopic identification:

1. **Transverse section:** Cork brownish-yellow. Cortex contains lignified fibers and crystal fibers. Pericycle contains unlignified fiber bundles. Phloem scattered with unlignified fibers and mucilage cells, phloem rays distinct. Cambium in a ring. Xylem developed, vessels scattered singly or 2 parallelly scattered, with distinct annual ring. Pith distinct.
2. **Powder:** Grayish-yellow. Fibers mostly tangled, pale yellow or colorless, extremely long and slightly curved, 8~33 μm in diameter, with walls thickened and unlignified, lumen linear. Stone cells pale yellow or yellow, subrounded, oblong or square, 13~39 μm in diameter, wall 6~20 μm thick, pit canals relatively distinct or branched. Crystal-containing sclerenchymatous cells with shape and size similar to stone cells, walls mostly vary in thickness, 2~6 μm thick, lumen containing 1~2 prisms of calcium oxalate. Prisms of calcium oxalate polyhedral, square, rhombic or subdouble-conical, 5~20 μm in diameter; clusters of calcium oxalate rare. Xylem rays heterocellular, 4~80 cells high and 1~3 cells wide in sectional view, 1~3 upright cells at both ends. Laticiferous tubes, xylem fibers, vessels, cork cells and prisms of calcium oxalate also present.

Thin layer chromatographic identification test (General rule 1010.3):

1. Sample solution: Add 5.0 g of powdered sample to 20 mL of methanol, ultrasonicate for 1 hour, filter and use the filtrate.
2. Reference drug solution: Use 5.0 g of the reference drug as the same method described above.

3. Procedure: Use silica gel F_{254} as the coating substance and a solution of ethyl acetate, methanol and water (10:2:1) as the developing solvent. Apply 5 μL of each of the above solutions to the plate. Once the top of the solvent rise to about 5~10 cm from the origin, dry in air. Examine under the ultraviolet light at 365 nm. The spots in the chromatogram obtained from the sample solution correspond in R_f values and color to the spots in the chromatogram obtained from the reference drug solution.

Impurities and other requirements:
1. Loss on drying: Not more than 12.0% under heating at 105℃ for 5 hours (General rule 5008).
2. Total ash: Not more than 6.0% (General rule 5004).
3. Acid-insoluble ash: Not more than 3.0% (General rule 5004).

Assay:
1. Dilute ethanol extractives: Carry out the method for determination of dilute ethanol-soluble extractives (General rule 5006).

Storage: Store in a ventilated and dry place.
Usage: Wind-dampness-dispelling medicinal.
Dosage: 9~15 g.

MORINDAE OFFICINALIS RADIX
巴戟天
Ba Ji Tian / Ba Ji Tian
Morinda Root

Morinda root is the dried root of *Morinda officinalis* How (Fam. Rubiaceae).
It contains not less than 50.0% of dilute ethanol-soluble extractives and not less than 55.0% of water extractives.

Description: Compressed-cylindrical, slightly curved, varying in length, 0.5~2 cm in diameter. Externally grayish-yellow or dark gray, with longitudinal wrinkles and transverse furrows, some bark transversely broken and wood exposed. Texture tenacious, fracture bark thick, purple or pale purple, easily exfoliated from wood, wood hard, yellowish-brown or yellowish-white, 1~5 mm in diameter. Odorless; taste, sweetish and slightly astringent.

Microscopic identification:
1. **Transverse section:** Cork composed of several layers of cells. Stone cells present individually or in groups in the outer part of cortex, arranged in an interrupted ring; parenchymatous cells contain raphides of calcium oxalate, tangentially elongated. Phloem broad; parenchymatous cells in the inner part contains raphides of calcium oxalate, radially elongated. Cambium distinct. Xylem vessels scattered individually or 2~3 in groups, arranged radially, up to 105 μm in diameter; xylem fibers relatively developed; xylem rays 1~3 layers of cells wide; some with existence of unlignified xylem parenchymatous cell groups.
2. **Powder:** Pale purple or purplish-brown. Stone cells pale yellow, subrounded, subsquare, subrectangular, strip-shaped or irregular, with acute end, 21~96 μm in diameter, cell wall up to 39 μm thick, occasionally with distinct striations, pits and pit canals; some stone cells large, wall thick. Raphides of calcium oxalate scattered in parenchymatous cells, up to 184 μm long. Bordered-pitted vessels pale yellow, up to 105 μm in diameter, pits very fine and dense. Fibers long-fusiform, with relatively large bordered pits, pit apertures obliquely slit-shaped, V-shaped or cruciate.

Thin layer chromatographic identification test (General rule 1010.3):
1. Sample solution: Add 2.0 g of powdered sample to 25 mL of ethanol, heat under reflux for 1 hour, filter and evaporate to 1 mL, and use the filtrate.
2. Reference drug solution: Use 2.0 g of the reference drug as the same method described above.
3. Procedure: Use silica gel F_{254} as the coating substance and a solution of toluene, ethyl acetate and formic acid (8:2:0.1) as the developing solvent. Apply 5 μL of each of the above solutions to the plate. Once the top of the solvent rise to about 5~10 cm from the origin, dry in air. Examine under ultraviolet light at 254 nm. Spray with a 5% solution of sodium hydroxide and heat at 105℃ until the spots become visible. Examine under visible light. The spots in the chromatogram obtained from the sample solution correspond in R_f values and color to the spots in the chromatogram obtained from the reference drug solution.

Impurities and other requirements:
1. Total ash: Not more than 6.0% (General rule 5004).
2. Acid-insoluble ash: Not more than 1.5% (General rule 5004).

Assay:
1. Water extractives: Carry out the method for determination of water extractives (General rule 5006).
2. Dilute ethanol extractives: Carry out the method for determination of dilute ethanol-soluble extractives (General rule 5006).

Storage: Refrigerate or store in a cool and dry place, and protect from mold and insects.
Usage: Tonifying and replenishing medicinal (Yang-assisting medicinal).
Dosage: 3~10 g.

MOSLAE HERBA
香薷
Siang Ru / Xiang Ru
Chinese Mosla Herb

Chinese mosla herb is the dried aerial part of *Mosla chinensis* Maxim. (Fam. Labiatae).
It contains not less than 10.0% of dilute ethanol-soluble extractives and not less than 9.0% of water extractives.

Description: Stem 30~50 cm in length, the basal part purplish-red, the upper part yellowish-green or pale yellow, whole plant covered densely with white pubescences. Stems quadrangular, base subrounded, nodes distinct, internodes 4~7 cm in length. Leaves opposite, mostly crumpled or fallen off, grayish-green or green, lamina lanceolate as whole, margin with 3~5 sparsely lobed, both surfaces pubescent and with glandular dots. Spike terminal and axillary; bracts board ovate; calyx persistent, campanulate, pale purplish-red or grayish-green, apex 5-lobed, densely pubescent. Nutlets 4, subspheroidal, with reticulations. Odor, intensely aromatic; taste, slightly pungent and cool.

Microscopic identification:

1. **Transverse section:**
   (1) Leaf: Upper epidermal cells with walls relatively straight, polygonal, with relatively numerous non-glandular hairs, glandular scales with an 8-celled head and an unicellular stalk, about 36~80 μm in diameter; lower epidermal cells with walls not thickened, glandular scales 70~80 μm in diameter. Stomata diacytic, more frequently observed on the lower surface. Non-glandular hairs on the upper and lower epidermis mostly 2-celled, the upper cells frequently hook-like, warty protruding distinct.

Thin layer chromatographic identification test (General rule 1010.3):

1. Sample solution: Add 1.0 g of powdered sample to 10 mL of methanol, ultrasonicate for 30 minutes, cool, filter and make up the filtrate to 10 mL.
2. Reference drug solution: Use 1.0 g of the reference drug as the same method described above.
3. Procedure: Use silica gel F_{254} as the coating substance and a solution of dichloromethane and acetone (5:1) as the developing solvent. Apply 10 μL of each of the above solutions to the plate. Once the top of solvent rise to about 5~10 cm from the origin, dry in air. Spray with a 10% solution of sulfuric acid in ethanol (H_2SO_4/EtOH TS), heat until the spots become visible, examine under visible light. The spots in the chromatogram obtained from the sample solution correspond in R_f values and color to the spots in the chromatogram obtained from the reference drug solution.

Impurities and other requirements:

1. Loss on drying: Not more than 12.0% under heating at 105℃ for 5 hours (General rule 5008).
2. Total ash: Not more than 10.0% (General rule 5004).
3. Acid-insoluble ash: Not more than 2.0% (General rule 5004).

Assay:

1. Water extractives: Carry out the method for determination of water extractives (General rule 5006).
2. Dilute ethanol extractives: Carry out the method for determination of dilute ethanol-soluble extractives (General rule 5006).

Storage: Store in a cool and dry place, and protect from insects.
Usage: Pungent-warm exterior-releasing medicinal.
Dosage: 3~9 g.

MOUTAN RADICIS CORTEX
牡丹皮
Mu Dan Pi / Mu Dan Pi
Tree Peony Bark

Tree peony bark is the dried bark of root of *Paeonia suffruticosa* Andr. (Fam. Ranunculaceae).
It contains not less than 23.0% of dilute ethanol-soluble extractives, not less than 20.0% of water extractives, not less than 1.0% of paeonol and not less than 0.5% of paeoniflorin.

Description: Quilled or semiquilled, with in longitudinal cut fissures, curved inward or opened, varying in length, 5~25 cm in length, 0.5~1.4 cm in diameter, 2~4 mm thick. Outer surface grayish-brown or yellowish-brown, the exposed surface where cork fallen off appearing pale grayish-yellow, pink or pale reddish-brown, with numerous transverse and slightly dented lenticels and rootlet scars, inner surface pale grayish-yellow or brown, with obvious fine longitudinal striations, showing white needle, flake or crystalline crystals. Texture hard and fragile, fracture relatively even, starchy, and grayish-white to pink. Odor, aromatic; taste slightly bitter and astringent, with numb and pungent sensation.

Microscopic identification:

1. **Transverse section:** Cork composed of several layers of cells, walls pale red. Cortex extremely thin, composed of several rows of prolonged tangentially parenchymatous cells. Phloem occupied the most part of the transverse section. Rays broad, 1~3 rows of cells wide. Phloem, parenchymatous cells of cortex and intercellular spaces all contain clusters of calcium oxalate; parenchymatous cells also contain starch granules.
2. **Powder:** Pale reddish-brown. Starch granules abundant, simple granules subspheroidal,

spheroidal or polygonal, 3~16 μm in diameter, hilum dotted, clef-shaped, Y-shaped or stellate; compound granules composed of 2~6 components. Clusters of calcium oxalate extremely abundant, 9~45 μm in diameter, crystal-containing parenchymatous cells arranged in rows, occasionally one parenchymatous cell containing several clusters or intercellular spaces filled with clusters. Cork cells rectangular, walls slightly thickened, pale red. Raphides or flaky crystals of paeonol occasionally present.

Thin layer chromatographic identification test (General rule 1010.3):

1. Sample solution: Add 1.0 g of powdered sample to 20 mL of methanol in a 100-mL conical flask, ultrasonicate for 30 minutes, filter, evaporate the filtrate to dryness, dissolve the residue in 1 mL of methanol and use the filtrate.
2. Reference drug solution: Use 1.0 g of the reference drug as the same method described above.
3. Reference standard solution: Weigh accurately a quantity of paeonol and dissolve in acetone to produce a solution containing 5 mg per mL.
4. Procedure: Use silica gel F_{254} as the coating substance and a solution of *n*-hexane and ethyl acetate (3:1) as the developing solvent. Apply 5 μL of each of the above solutions to the plate. Once the top of the solvent rise to about 5~10 cm from the origin, dry in air. Examine under the ultraviolet light at 254 nm. The spots in the chromatogram obtained from the sample solution correspond in R_f values and color to the spots in the chromatogram obtained from the reference drug solution and the reference standard solution.

Impurities and other requirements:

1. Loss on drying: Not more than 13.0% under heating at 105℃ for 5 hours (General rule 5008).
2. Total ash: Not more than 5.0% (General rule 5004).
3. Acid-insoluble ash: Not more than 1.0% (General rule 5004).
4. Total heavy metals: Not more than 10.0 ppm (General rule 3005).
5. Arsenic (As): Not more than 5.0 ppm (General rule 3006, 3049, 3050).
6. Pesticide residues:
   (1) The total DDT content: Not more than 0.2 ppm (General rule 3052).
   (2) The total BHC content: Not more than 0.2 ppm (General rule 3052).

Assay:

1. Paeonol:
   (1) Mobile phase: A solution of water, acetonitrile and glacial acetic acid (65:35:2). The ratio varies as required.
   (2) Reference standard solution: Place paeonol in a potassium chloride dryer for 1 hour. Weigh accurately 10.0 mg and dissolve in methanol to 100 mL. Measure accurately 10 mL of the mixture and add methanol to 50 mL.
   (3) Sample solution: Weigh accurately 0.3 g of powdered sample, add 40 mL of methanol, heat under reflux for 30 minutes, cool, filter, add 40 mL of methanol to the residue, operated as above again, combine all filtrates, add methanol to 100 mL, take 10 mL of the mixture, add methanol to 25 mL.
   (4) Chromatographic system: The liquid chromatography is equipped with an ultraviolet absorption photometer (wavelength: 274 nm) and a column (4~6 mm × 15~25 cm) packed with octadecylsilanized silica gel (5~10 μm in particle diameter). The column temperature is maintained at 20℃. The retention time of paeonol is about 14 minute. Inject reference standard solution into the liquid chromatography apparatus for five times, and record the peak areas. The relative standard deviation of the peak area of paeonol should not be more than 1.5%.
   (5) Procedure: Inject accurately 10~20 μL of each of the reference standard solution and the sample solution into the liquid chromatography apparatus, and calculate the content.
2. Paeoniflorin:
   (1) Mobile phase: A solution of water and acetonitrile (4:1). The ratio varies as required.
   (2) Reference standard solution: Weigh accurately 10.0 mg of paeoniflorin and dissolve in dilute methanol to 100 mL (1 in 2).
   (3) Sample solution: Weigh accurately 0.5 g of powdered sample, add dilute methanol to 50 mL (1 in 2), heat under reflux for 30 minutes, cool and filter, and then dilute the residue with methanol to 50 mL (1 in 2), as the same method described above, combine all supernatants, add dilute methanol to 100 mL (1 in 2).
   (4) Chromatographic system: The liquid chromatography is equipped with an ultraviolet absorption photometer (wavelength: 230 nm) and a column (4~6 mm × 15~25 cm) packed with octadecylsilanized silica gel (5~10 μm in particle diameter). The column temperature is maintained at 20℃. The retention time of paeoniflorin is about 10 minute. Inject accurately 10 μL of reference standard solution into the liquid chromatography apparatus for five times. The relative standard deviation of the peak area of paeoniflorin should not be more than 1.5%.

(5) Procedure: Inject accurately 10 μL of each of the reference standard solution and the sample solution into the liquid chromatography apparatus, and calculate the content.

3. Water extractives: Carry out the method for determination of water extractives (General rule 5006).
4. Dilute ethanol extractives: Carry out the method for determination of dilute ethanol-soluble extractives (General rule 5006).

Storage: Store in a ventilated and dry place.
Usage: Heat-clearing medicinal (Heat-clearing and blood-cooling medicinal).
Dosage: 6~12 g.

MUME FRUCTUS
烏梅
Wu Mei / Wu Mei
Dark Plum Fruit

Dark plum fruit is the dried and almost ripe fruit of *Prunus mume* (Sieb.) Sieb. et Zucc. (Fam. Rosaceae).
It contains not less than 18.0% of dilute ethanol-soluble extractives, not less than 18.0% of water extractives and not less than 12.0% of citric acid.

Description: Subspheroidal or flattened-spheroidal, 1.5~3 cm in diameter. Externally brownish-black to black, shrunken and uneven, pubescent, base with a rounded fruit stalk scar. Pulp soft or slightly hard. Kern hard, ellipsoidal, brownish-yellow, with dented spots on surface; seed 1, flattened-ovate, pale yellow. Odor, burnt and sour; taste, extremely sour and astringent.

Microscopic identification:

1. **Powder:** Brownish-black. Non-glandular hairs mostly unicellular, few with 2~5 cells, straight or sickle-shaped curved, pale yellowish-brown, 32~720 μm in length and 16~49 μm in diameter, with walls thickened, unlignified or slightly lignified, spiral overlapped striations occasionally visible on the surface, the base slightly rounded or straight, lumen usually containing brown contents. Parenchymatous cells of mesocarp shrunken, occasionally containing clusters of calcium oxalate, 26~35 μm in diameter. Fibers singly scattered or several in bundles, scattered in parenchyma tissue, long-fusiform, 6~29 μm in diameter, wall 3~9 μm thick, unlignified or slightly lignified. Epidermal cells subpolygonal in surface view, lumen containing blackish-brown contents, scars after non-glandular hairs fallen off frequently present. Stone cells few, rectangular, subrounded or subpolygonal, 20~36 μm in diameter, lumen containing reddish-brown contents.

Thin layer chromatographic identification test (General rule 1010.3):

1. Sample solution: Add 1.0 g of powdered sample to 10 mL of methanol, ultrasonicate for 30 minutes, cool, filter and make up the filtrate to 10 mL with methanol.
2. Reference drug solution: Use 1.0 g of the reference drug as the same method described above.
3. Procedure: Use silica gel F_{254} as the coating substance and a solution of *n*-butanol, water and glacial acetic acid (7:2:1) as the developing solvent. Apply 10 μL of each of the above solutions to the plate. Once the top of the solvent rise to about 5~10 cm from the origin, dry in air. Spray with a solution of sulfuric acid in ethanol (1:9) (H_2SO_4/EtOH TS), heat at 105℃ for 1 minute, and then spray again with a solution of *p*-anisaldehyde in sulfuric acid (*p*-Anisaldehyde/H_2SO_4 TS), heat until the spots become visible, and examine under visible light. The spots in the chromatogram obtained from the sample solution correspond in R_f values and color to the spots in the chromatogram obtained from the reference drug solution.

Impurities and other requirements:

1. Total ash: Not more than 6.0% (General rule 5004).
2. Acid-insoluble ash: Not more than 1.0% (General rule 5004).

Assay:

1. Citric acid:
   (1) Mobile phase: A solution of acetonitrile and 0.5% ammonium dihydrogen phosphate solution (3:97) (adjust the pH value to 3.0 with phosphoric acid). The ratio varies as required.
   (2) Reference standard solution: Weigh accurately a quantity of citric acid and dissolve in water to produce a solution containing 0.5 mg per mL.
   (3) Sample solution: Weigh accurately 0.2 g of powdered sample, transfer to a conical flask with stopper, add accurately 50 mL of water then weigh, heat under reflux for 1 hour, cool, weigh again, replenish the loss of the weight with water, mix well, centrifuge, and use the supernatant.
   (4) Chromatographic system: The liquid chromatography is equipped with an ultraviolet absorption photometer (wavelength: 210 nm) and a column packed with octadecylsilanized silica gel. The number of theoretical plates of the peak of citric acid should not be less than 7,000
   (5) Procedure: Inject accurately 10 μL of the reference standard solution and 5 μL of the sample solution into the liquid chromatography apparatus, and calculate the content.

2. Water extractives: Carry out the method for determination of water extractives (General rule 5006).
3. Dilute ethanol extractives: Carry out the method for determination of dilute ethanol-soluble extractives (General rule 5006).

Storage: Store in a cool and dry place, and protect from moisture.
Usage: Astringent medicinal.
Dosage: 6~12 g.

MYRISTICAE SEMEN
肉豆蔻
Rou Dou Kou / Rou Dou Kou
Nutmeg Seed

Nutmeg seed is the dried ripe seed of *Myristica fragrans* Houtt. (Fam. Myristicaceae).
It contains not less than 8.0% of dilute ethanol-soluble extractives, not less than 4.0% of water extractives and not less than 5.0% (v/w) of mace oil.

Description: Ovate or ellipsoidal, 2~3.5 cm in length, 1.5~2.5 cm in diameter. Externally grayish-brown or blackish-brown, with pale longitudinal furrows and irregular reticulated wrinkles. A hilum occurring at the broad end, chalaza dark and dented at the other end, raphe longitudinally furrowed, connecting with two ends. Texture hard, fracture showing marble-like striations, made by outer layer of blackish-brown perisperm inserting into pale yellowish-orange endosperm; the broad longitudinal section with small cavity gap, within a dried and shrunken embryo. Odor, strongly aromatic; taste, pungent.

Microscopic identification:
1. **Transverse section:** Outer layers of perisperm tissue composed of more than 10 layers of flattened and shriveled cells, containing brown contents, occasionally small prisms present. Crisscross tissue contains small vascular bundles. Inner layers of perisperm tissue dark brown, inserting to the pale yellow endosperm, formed crisscross tissue with marble striations, containing numerous oil cells. Endosperm with thin wall, subrounded, filled with starch granules, fatty oil droplets and aleurone granules, scattered with sparse pale yellow cells. Starch granules mostly individual, 10~20 μm in diameter; less compound granules composed of 2~6 components, 25~30 μm in diameter, hilum distinct. Treated with iodine solution and then mounting with glycerin, showing large aleurone granules among many bluish-black starch granules; while mounting with chloral hydrate, the fatty oil often shaped in clumpy or lamellar, it alters into oil droplets when heated.
2. **Powder:** Reddish-brown. Starch granules numerous, spheroidal, up to 20 μm in diameter; hilum stellated or cleft-shaped, compound granules also present. Perisperm cells polygonal, brown or brownish-black. Oil cells occasionally present. Endosperm cells colorless, polygonal, sparsely scattered with brown pigment cells. Vessels spiral. While mounting with chloral hydrate, numerous fatty oil droplets separated out, the oil droplets occasionally solidified gradually to form needle-clustered crystals.

Thin layer chromatographic identification test (General rule 1010.3):
1. Sample solution: Add 2.0 g of powdered sample to 10 mL of methanol, ultrasonicate for 30 minutes, filter the supernatant and use filtrate.
2. Reference drug solution: Use 2.0 g of the reference drug as the same method described above.
3. Procedure: Use silica gel F_{254} as the coating substance and a solution of petroleum ether (30~60 ℃) and ethyl acetate (9:1) as the developing solvent. Apply 5 μL of each of the above solutions to the plate. Once the top of the solvent rise to about 5~10 cm from the origin, dry in air. Spray with a 5% solution of vanillin in ethanol (Vanillin/EtOH TS), heat at 105℃ until the spots become visible. The spots in the chromatogram obtained from the sample solution correspond in R_f values and color to the spots in the chromatogram obtained from the reference drug solution.

Impurities and other requirements:
1. Loss on drying: Not more than 13.0% under heating at 105℃ for 5 hours (General rule 5008).
2. Total ash: Not more than 3.0% (General rule 5004).
3. Acid-insoluble ash: Not more than 1.0% (General rule 5004).

Assay:
1. Water extractives: Carry out the method for determination of water extractives (General rule 5006).
2. Dilute ethanol extractives: Carry out the method for determination of dilute ethanol-soluble extractives (General rule 5006).
3. Volatile oil: Carry out the method for determination of volatile oil (General rule 5007).

Storage: Refrigerate or store in a cool and dry place, and protect from insects.
Usage: Astringent medicinal.
Dosage: 3~10 g.

MYRRHA
沒藥
Mei Yao / Mei Yao
Myrrh

Myrrh is the dried resin collected from the bark of trunk of *Commiphora myrrha* Engl. or *Commiphora molmol* Engl. and similar species (Fam. Burseraceae). The drug is divided into "natural myrrh" and "colloidal myrrh".
It contains not less than 10.0% of dilute ethanol-soluble extractives and not less than 21.0% of water extractives.

Description:
1. Natural myrrh: Irregular granular agglomerates, varying in size, the large one up to or more than 6 cm in diameter. Externally yellowish-brown or reddish-brown, the translucent part in brownish-black color, covered with yellow dust-like powder. Texture hard and fragile, broken surface uneven, lusterless. Odor, characteristic; taste, bitter and slightly pungent.
2. Colloidal myrrh: Irregular pieces and grains, mostly agglutinated into lumps, varying in size, the large one up to or more than 6 cm in diameter. Externally brownish-yellow to brown, opaque. Texture compact or loose. Odor, characteristic; taste, bitter and viscous.

Thin layer chromatographic identification test (General rule 1010.3):
1. Sample solution: Add 2.0 g of powdered sample to 5 mL of methanol, ultrasonicate for 30 minutes, filter and use the filtrate.
2. Reference drug solution: Use 2.0 g of the reference drug as the same method described above.
3. Procedure: Use silica gel F_{254} as the coating substance and a solution of *n*-hexane and ethyl acetate (4:1) as the developing solvent. Apply 10 μL of each of the above solutions to the plate. Once the top of the solvent rise to about 5~10 cm from the origin, dry in air. Spray with a solution of *p*-anisaldehyde in sulfuric acid (*p*-Anisaldehyde/H_2SO_4 TS), heat at 105℃, and examine under visible light. The spots in the chromatogram obtained from the sample solution correspond in R_f values and color to the spots in the chromatogram obtained from the reference drug solution.

Impurities and other requirements:
1. Total ash: Not more than 15.0% (General rule 5004).
2. Acid-insoluble ash: Not more than 10.0% (General rule 5004).
3. Total heavy metals: Not more than 20.0 ppm (General rule 3005).

Assay:
1. Water extractives: Carry out the method for determination of water extractives (General rule 5006).
2. Dilute ethanol extractives: Carry out the method for determination of dilute ethanol-soluble extractives (General rule 5006).

Storage: Store in a cool and dry place.
Usage: Blood-regulating medicinal (Blood-activating and stasis-dispelling medicinal).
Dosage: 3~5 g.
Precaution and warning: Contraindicated in pregnancy and bleeding.

NATRII SULFAS
芒硝
Mang Siao / Mang Xiao
Mirabilitum

Mirabilitum is a crystalline substance purified from a mineral of sulfates of Glauber's salts group, containing mainly hydrated sodium sulfate ($Na_2SO_4 \cdot 10H_2O$).

Description: Prismatic, irregular masses or granules. Colorless and transparent, or a whitish and translucent. Texture fragile and easily broken, fracture with glassy luster. Soluble in water and insoluble in ethanol. Odorless; taste, salty.

Identification:
1. Check sodium salt: Take a platinum wire moistened with hydrochloric acid, dampen with a little powdered sample, burn in a colorless flame, a yellow colored flame is produced. Take a neutral sample solution, add a solution of zinc bis (acetato-O) dioxouranate, and a yellow precipitate is produced (General rule 2001).
2. Check sulfate salt: Take a sample solution, add a solution of barium chloride, a white precipitate is produced and insoluble in hydrochloric acid or nitric acid (General rule 2001).
3. Check iron and zinc: Dissolve 5.0 g of powdered sample in 20 mL of water, add 2 drops of nitric acid, boil for 5 minutes, neutralize with sodium hydroxide, add 1 mL of dilute hydrochloric acid, 1 mL of potassium ferrocyanide and a quantity of water to 50 mL, mix well, stand for 10 minutes, no turbidity or a blue color is produced (General rule 2001).

Impurities and other requirements:
1. Loss on drying: Not more than 51.0%~57.0% under heating at 105℃ for 5 hours (General rule 5008).
2. Acid-insoluble ash: Not more than 9.0% (General rule 5004).
3. Total heavy metals: Not more than 10.0 ppm (General rule 3005).

4. Arsenic (As): Not more than 10.0 ppm (General rule 3006, 3049, 3050).

Storage: Preserve in a cool, dry and well-closed container, and protect from efflorescence.
Usage: Purgative medicinal.
Dosage: 6~12 g.
Precaution and warning: Used with caution in pregnancy.

NATURALIS INDIGO
青黛
Cing Dai / Qing Dai
Natural Indigo

Natural indigo is the dried powder or masses perpared from the leaf or the stem and leaf of *Baphicacanthus cusia* (Nees) Bremek. (Fam. Acanthaceae), *Polygonum tinctorium* Ait. (Fam. Polygonaceae) or *Isatis indigotica* Fort. (Fam. Cruciferae).
It contains not less than 2.0% of indigo and not less than 0.13% of indirubin.

Description: A pale blue to grayish-blue fine powder, or irregular porous masses, finely powdered on twisting. Texture light, puffy. Odor, grassy; taste, weak. The better character as light, dark blue, fine powder, floating on water and burning with prune flames.

Thin layer chromatographic identification test (General rule 1010.3):
1. Sample solution: Add 50.0 mg of powdered sample to 5 mL of dichloromethane, ultrasonicate for 10 minutes, filter and use the filtrate.
2. Reference drug solution: Use 50.0 mg of the reference drug as the same method described above.
3. Reference standard solution: Weigh accurately a quantity of indigo and indirubin and dissolve in dichloromethane to produce a solution containing 1 mg and 0.5 mg per mL of each.
4. Procedure: Use silica gel F_{254} as the coating substance and a solution of toluene, dichloromethane and acetone (5:4:1) as the developing solvent. Apply 5 μL of each of the above solutions to the plate. Once the top of the solvent rise to about 5~10 cm from the origin, dry in air. Examine under visible light. The spots in the chromatogram obtained from the sample solution correspond in R_f values and color to the spots in the chromatogram obtained from the reference drug solution and the reference standard solution.

Impurities and other requirements:
1. Loss on drying: Not more than 6.0% under heating at 105℃ for 5 hours (General rule 5008).
2. Acid-insoluble ash: Not more than 44.0% (General rule 5004).

Assay:
1. Indigo: Carry out the method of determination of spectrophotometry (General rule 1008).
   (1) Reference standard solution: Weigh accurately 20.0 mg of indigo in a conical flask, add about 15 mL of sulfuric acid solution slowly, use stirring rod to mix well consistently, place in a water bath at 80℃ for 1 hour for sulfonation, cool. Transfer the solution to a 200-mL volumetric flask containing a quantity water, dissolve the residue and wash the container with water, combine the washings to the same flask, add water to volume, mix well and filter. Measure accurately 5 mL to a 50-mL volumetric flask, add water to volume, mix well (containing 10 μg per mL).
   (2) Calibration standard: Measure accurately 1, 2, 3, 4 and 5 mL of the reference standard solution, respectively, into a 10-mL volumetric flask, add water to volume, mix well. Measure the absorbance at 610 nm and plot the standard curve, use absorbance as ordinate and concentration as abscissa.
   (3) Procedure: Weigh accurately 0.4 g of powdered sample in a conical flask, add about 15 mL of sulfuric acid solution slowly, use stirring rod to mix well consistently, place in a water bath at 80℃ for 1 hour for sulfonation, cool. Transfer the solution to a 200-mL volumetric flask containing suitable water, dissolve the residue and wash the container with water, combine the washings to the same flask, add water to volume, mix well and filter. Measure accurately 5 mL to a 50 or 100-mL volumetric flask, let the absorbance between 0.20~0.45, add water to volume, mix well, measure the absorbance at 610 nm, read out the weight of indigo (μg) in the sample solution from the standard curve, and calculate the content.
2. Indigo:
   (1) Mobile phase: A solution of methanol and water (75:25). The ratio varies as required.
   (2) Reference standard solution: Weigh accurately 2.5 mg of indigo, transfer to a 250-mL volumetric flask, dissolve in a 220 mL solution of 2% chloral hydrate in chloroform (place chloral hydrate in a dryer for 24 hours, weigh 2.0 g and dissolve in chloroform to produce a 100 mL solution, stand until the solution turbid, dehydrate with anhydrous sodium sulfate, and filter), ultrasonicate for 90 minutes, cool, add a solution of 2% chloral hydrate in chloroform to volume, and mix well (containing 10 μg per mL).
   (3) Sample solution: Weigh accurately 50 mg of powdered sample, transfer to a 250-mL volumetric flask, dissolve in a 220 mL

solution of 2% chloral hydrate in chloroform, ultrasonicate for 30 minutes, cool, add a solution of 2% chloral hydrate in chloroform to volume, shake well and filter, use the successive filtrate.

(4) Chromatographic system: The liquid chromatography is equipped with an ultraviolet absorption photometer (wavelength: 606 nm) and a column packed with octadecylsilanized silica gel. The number of theoretical plates of the peak of indigo should not be less than 1,800.

(5) Procedure: Inject accurately 10 μL of each of the reference standard solution and the sample solution into the liquid chromatography apparatus, and calculate the content.

3. Indirubin:

(1) Mobile phase: A solution of methanol and water (70:30). The ratio varies as required.

(2) Reference standard solution: Weigh accurately 2.5 mg of indirubin, transfer to a 50-mL volumetric flask, dissolve in a 45 mL solution of *N,N*-dimethylformamide, ultrasonicate to dissolve, cool, add *N,N*-dimethylformamide to volume, and mix well. Weigh accurately 10 mL of the mixture to a 100-mL volumetric flask, add *N,N*-dimethylformamide to volume, mix well (containing 5 μg per mL).

(3) Sample solution: Weigh accurately 50 mg of powdered sample, transfer to a 25-mL volumetric flask, dissolve in a 20 mL of *N,N*-dimethylformamide, ultrasonicate for 30 minutes, cool, add *N,N*-dimethylformamide to volume, shake well and filter, use the successive filtrate.

(4) Chromatographic system: The liquid chromatography is equipped with an ultraviolet absorption photometer (wavelength: 292 nm) and a column packed with octadecylsilanized silica gel. The number of theoretical plates of the peak of indirubin should not be less than 3,000.

(5) Procedure: Inject accurately 10 μL of each of the reference standard solution and the sample solution into the liquid chromatography apparatus, and calculate the content.

Storage: Refrigerate or store in a cool and dry place, and protect from mold and insects.
Usage: Heat-clearing medicinal (Heat-clearing and detoxcating medicinal).
Dosage: 1.5~3 g, usually used in pills or powder, and used an appropriate amount for external use.

NELUMBINIS FOLIUM
荷葉
He Ye / He Ye
Lotus Leaf

Lotus leaf is the dried leaf of *Nelumbo nucifera* Gaertn. (Fam. Nymphaeaceae).
It contains not less than 13.0% of dilute ethanol-soluble extractives and not less than 8.0% of water extractives.

Description: Semicircular or plicate, peltate or subrounded when spread, 30~60 cm in diameter. Upper surface brownish-green, relatively rough, with white and short glandular hairs; lower surface grayish-brown, smooth and lustrous, center remained with petiole. Veins radiating from the center to the border, wrinkles arranged parallelly to the veins. Texture fragile, easily broken. Odor, slight; taste, weak and slightly astringent.

Microscopic identification:

1. **Transverse section:** Upper epidermis composed of square or irregular flatten cells, anticlinal walls straight or curved, periclinal walls with papillary protuberances and cutinized. Lower epidermis composed of polygonal or subrounded cells, anticlinal walls undulated, periclinal walls with thick cuticle, without protuberance. Main vein with numerous vascular bundles, the middle two relatively large, arranged vertically in closed collateral type, surrounded by 1~4 rows of fibers, fibers relatively numerous near upper and lower epidermis, triangular or polygonal. Mesophyll composed of collenchyma tissue, palisade tissue and spongy tissue, main vein scattered with collenchyma tissue near upper and lower epidermis; palisade tissue square or subrounded; spongy tissue subrounded or polygonal, containing clusters of calcium oxalate.
2. **Powder:** Grayish-green. Upper epidermal cells polygonal, with papillary protuberances, stomata usually visible, 15~20 μm in diameter, palisade tissue obviously visible. Lower epidermal cells irregular in shape, stomata occasionally found. Vessels mainly spiral, annular vessels occasionally found, 10~80 μm in diameter. Fibers slender, 10~30 μm in diameter. Mesophyll cells contain abundant clusters of calcium oxalate, 10~40 μm in diameter.

Thin layer chromatographic identification test (General rule 1010.3):

1. Sample solution: Add 2.0 g of powdered sample to 30 mL of 50% methanol, heat under reflux for 1 hour, filter, evaporate the filtrate to 10 mL, add 5 mL water, add 0.5 mL dilute sulfuric acid; heat under reflux for 1 hour, extract by shaking with two 15 mL quantities of ethyl acetate, combine the ethyl acetate extracts, add a few quantity of anhydrous sodium, mix well, filter and use the filtrate.

2. Reference drug solution: Use 2.0 g of the reference drug as the same method described above.
3. Reference standard solution: Weigh accurately 1.0 mg of quercetin and dissolve in ethyl acetate to produce a 15.0 mL solution.
4. Procedure: Use silica gel F_{254} as the coating substance and a solution of toluene, ethyl formate and formic acid (5:4:1) as the developing solvent. Apply 3 μL of each of the above solutions to the plate. Once the top of the solvent rise to about 5~10 cm from the origin, dry in air. Spray with a 1% solution of aluminum chloride in ethanol ($AlCl_3$/EtOH TS) and heat at 105℃ for 2 minutes until the spots become visible. Examine under the ultraviolet light at 365 nm. The spots in the chromatogram obtained from the sample solution correspond in R_f values and color to the spots in the chromatogram obtained with the reference drug solution and the reference standard solution.

Impurities and other requirements:
1. Loss on drying: Not more than 14.0% under heating at 105℃ for 5 hours (General rule 5008).
2. Total ash: Not more than 12.0% (General rule 5004).
3. Acid-insoluble ash: Not more than 2.0% (General rule 5004).

Assay:
1. Water extractives: Carry out the method for determination of water extractives (General rule 5006).
2. Dilute ethanol extractives: Carry out the method for determination of dilute ethanol-soluble extractives (General rule 5006).

Storage: Store in a cool and dry place, and protect from moisture.
Usage: Hemostatic medicinal.
Dosage: 3~9 g.

NELUMBINIS RHIZOMATIS NODUS
藕節
Ou Jie / Ou Jie
Lotus Rhizome Node

Lotus rhizome node is the dried node of rhizome of *Nelumbo nucifera* Gaertn. (Fam. Nymphaeaceae).
It contains not less than 8.0% of dilute ethanol-soluble extractives and not less than 10.0% of water extractives.

Description: Shortly cylindrical, 2~4 cm in length, 2~3 cm in diameter. Externally grayish-yellow or grayish-brown, with remains of round rootlets scars and lax rootlets. Both ends with residual lotus rhizomes, wrinkled and longitudinal-striated externally. Texture light and hard, uneasily broken, fracture with numerous subrounded pores, the pore in the center relatively small. Odor, slight; taste, slightly sweet and astringent.

Microscopic identification:
1. **Powder:** Grayish-brown. Simple starch granules subrounded, elongated-ovate or elongated-oblong, few gourd-shaped, reniform or rhombic, some with margins protuberant, 5~49 μm in diameter, up to 81 μm in length, large granules with distinct hilum, mostly located at one side, striations distinct; compound granules composed of 2~6 components. Clusters of calcium oxalate 16~60 μm in diameter. Vessels mainly scalariform, reticulate and spiral vessels few, double-spiral vessels occasionally found, 10~144 μm in diameter. Xylem fibers long-fusiform, 7~29 μm in diameter, wall slightly thickened and lignified, pits oblique slit-shaped or V-shaped, pit canals distinct. Epidermal cells long strip-shaped in surface view, wall straight.

Thin layer chromatographic identification test (General rule 1010.3):
1. Sample solution: Add 1.0 g of powdered sample to 20 mL of dilute ethanol, ultrasonicate for 20 minutes, filter and use the filtrate.
2. Reference drug solution: Use 1.0 g of the reference drug as the same method described above.
3. Reference standard solution: Weigh accurately a quantity of alanine and dissolve in dilute ethanol to produce a solution containing 0.5 mg per mL.
4. Procedure: Use silica gel F_{254} as the coating substance and a solution of *n*-butanol, glacial acetic acid and water (4:1:1) as the developing solvent. Apply 10 μL of each of the sample solution and reference drug solution and 2 μL of the reference standard solution to the plate. Once the top of the solvent rise to about 5~10 cm from the origin, dry in air. Spray with a solution of ninhydrin (Ninhydrin TS), heat at 105℃ to the spots become visible clear. The spots in the chromatogram obtained from the sample solution correspond in R_f values and color to the spots in the chromatogram obtained from the reference drug solution and the reference standard solution.

Impurities and other requirements:
1. Total ash: Not more than 8.0% (General rule 5004).
2. Acid-insoluble ash: Not more than 3.0% (General rule 5004).

Assay:
1. Water extractives: Carry out the method for determination of water extractives (General rule 5006).
2. Dilute ethanol extractives: Carry out the method for determination of dilute ethanol-soluble extractives (General rule 5006).

Storage: Refrigerate or store in a dry place, and protect from insects.
Usage: Blood-regulating medicinal (Hemostatic medicinal).

Dosage: 9~15 g.

NELUMBINIS SEMEN
蓮子
Lian Zih / Lian Zi
Lotus Seed

Lotus seed is the dried ripe seed of *Nelumbo nucifera* Gaertn. (Fam. Nymphaeaceae).
It contains not less than 8.0% of dilute ethanol-soluble extractives and not less than 10.0% of water extractives.

Description: Ellipsoidal or subspheroidal, 1.3~1.7 cm in length, 1.0~1.3 cm in diameter. Externally pale yellowish-brown to reddish-brown, with longitudinal brown striations. The center of one end papillate, dark brown, mostly with cracks, occasionally dented around the edge. Texture hard, testa thin, uneasily peeled off. Cotyledons 2, yellowish-white, fleshy, with green plumule at the space between two cotyledons. Odorless, slight; taste, testa astringent; cotyledons slightly sweet; lotus plumule extreme bitter. Usually use after removing teste and lotus plumule.

Microscopic identification:

1. **Transverse section:** Testa composed of several layers of rectangular or polygonal parenchymatous cells, arranged tangentially, containing reddish-brown contents, slightly lignified; inside showing pigment layer, several layers of polygonal parenchymatous cells surrounding embryo, containing yellowish-brown contents. Embryo composed of several dozens layers of oblong, round or irregular parenchymatous cells, containing abundant starch granules and oblong colorless contents; procambium filaments present in embryo layer, oblong, 100~200 μm in diameter, composed of oblong or irregular cells, unlignified. Endotesta composed of 1 layer of square or rectangular parenchymatous cells, containing pale yellow contents.
2. **Powder:** Off-white (removed germ). Starch granules occupied the major portion of the powder, simple granules elongated-rounded, subrounded, ovate, triangular or reniform, 5~25 μm in diameter, 20~30 μm in length, hilum few, cleft-shaped or dotted, striations indistinct; compound granules few, composed of 2~3 components. Fragments of testa pale brown or nearly colorless, epidermal cells subpolygonal or irregular in surface view, wall thin. Stomata rounded or elongated-rounded. Cells of pigment layers yellowish-brown, subrectangular or polygonal. Clusters of calcium oxalate occasionally found. Vessels occasionally found, mainly spiral, annular vessels few, 8~36 μm in diameter.

Thin layer chromatographic identification test (General rule 1010.3):

1. Sample solution: Add 1.0 g of powdered sample to 15 mL of methanol, ultrasonicate for 30 minutes, filter and use the filtrate.
2. Reference drug solution: Use 1.0 g of the reference drug as the same method described above.
3. Procedure: Use silica gel F_{254} as the coating substance and a solution of *n*-hexane and acetone (7:2) as the developing solvent. Apply 10 μL of each of the above solutions to the plate. Once the top of the solvent rise to about 5~10 cm from the origin, dry in air. Spray with a solution of vanillin in a solution of sulfuric acid and ethanol (Vanillin/H_2SO_4 TS), heat at 105℃. The spots in the chromatogram obtained from the sample solution correspond in R_f values and color to the spots in the chromatogram obtained from the reference drug solution.

Impurities and other requirements:

1. Loss on drying: Not more than 15.0% under heating at 105℃ for 5 hours (General rule 5008).
2. Total ash: Not more than 5.0% (General rule 5004).
3. Acid-insoluble ash: Not more than 3.0% (General rule 5004).
4. Aflatoxins: Not more than 15.0 ppb (General rule 3053).

Assay:

1. Water extractives: Carry out the method for determination of water extractives (General rule 5006).
2. Dilute ethanol extractives: Carry out the method for determination of dilute ethanol-soluble extractives (General rule 5006).

Storage: Refrigerate or store in a cool and dry place, and protect from insects.
Usage: Astringent medicinal.
Dosage: 6~15 g.

NOTOGINSENG RADIX
三七
San Ci / San Qi
Notoginseng Root

Notoginseng root is the dried root of *Panax notoginseng* (Burk.) F. H. Chen (Fam. Araliaceae).
It contains not less than 18.0% of dilute ethanol-soluble extractives, not less than 20.0% of water extractives and not less than 5.0% of the total amount of ginsenoside Rg_1, ginsenoside Rb_1 and notoginsenoside R_1.

Description: Subconical, fusiform or irregular masses, with a few branches, 1~6 cm in length, 1~4 cm in diameter. Externality grayish-yellow or grayish-brown, with a wax-like luster, irregular longitudinal fine

striations and a few transverse lenticels, the upper with several tumor-like scars of rootlet, apex remained with roots base. Texture heavy and compact. Bark and wood often separated when crushed. Fracture grayish-green, yellowish-green or grayish-white, bark with small brown spots (resin canals). Odor, slight; taste, bitter and slightly sweet.

Microscopic identification:

1. **Transverse section:** Outermost layer composed of 1 layer of epidermal cells covered with cuticle, mostly broken, cells rectangular or subsquare. Phelloderm composed of 7~10 layers of rectangular, subrectangular or subsquare cells. Cortex narrow, cells rectangular or flattened-rectangular. Phloem occupied about 1/3 portion of the root, mainly composed of parenchymatous cells filled with starch granules; cells rectangular, subrectangular, subsquare, subpolygonal or subrounded, with distinct intercellular spaces, clusters of calcium oxalate occasionally found; resin canals containing yellow secretions scattered, composed of 5~8 flat and small cells, rounded or elongated-rounded, 60~120 μm in diameter; phloem showing irregular clefts in the outer part, cells arranged densely in the inner part, relatively numerous resin canals arranged in a ring near cambium. Cambium distinct, composed of 3~4 rows of cells, arranged in an interrupted ring. Xylem composed of vessels, xylem parenchymatous cells and ray cells; vessels 16~56 μm in diameter, mainly reticulate or scalariform, a few spiral, cells subrounded, subpolygonal, subovate or subsquare. Pith broad, composed of subrectangular, subsquare, subpolygonal or subrounded parenchymatous cells, filled with starch granules, clusters of calcium oxalate occasionally found. Primary xylem existed in the center, scattered with few vessels, mainly composed of small parenchymatous cells.
2. **Powder:** Yellowish-white. Simple starch granules subrounded, 3~28 μm in diameter, hilum dotted, short slit-shaped or V-shaped; compound granules composed of 2~10 components. Reticulate and scalariform vessels 16~55 μm in diameter. Resin canals 60~128 μm in diameter, secretory cells and canals contain brownish-yellow droplets-like or mass-like secretions. Cork cells rectangular or polygonal, walls thin. Clusters of calcium oxalate rare, 48~80 μm in diameter, angles broad and blunt.

Thin layer chromatographic identification test (General rule 1010.3):

1. Sample solution: Add 0.2 g of powdered sample to 5 mL of methanol, ultrasonicate for 30 minutes, centrifuge for 10 minutes, and use the supernatant.
2. Reference drug solution: Use 0.2 g of the reference drug as the same method described above.
3. Reference standard solution: Weigh accurately a quantity of notoginsenoside R_1, ginsenoside Rb_1, ginsenoside Re, and ginsenoside Rg_1 and dissolve in methanol to produce a solution containing 1.0 mg per mL of each.
4. Procedure: Use silica gel F_{254} as the coating substance and the lower layer of a solution of dichloromethane, ethyl acetate, methanol and water (15:40:22:10) as the developing solvent. Apply 1 μL of each of the above solutions to the plate. Once the top of the solvent rise to about 5~10 cm from the origin, dry in air, spray with a 10% solution of sulfuric acid in ethanol (H_2SO_4/EtOH TS), heat at 105℃ until the spots become visible. The spots in the chromatogram obtained from the sample solution correspond in R_f values and color to the spots in the chromatogram obtained from the reference drug solution and the reference standard solution.

Impurities and other requirements:

1. Loss on drying: Not more than 14.0% under heating at 105℃ for 5 hours (General rule 5008).
2. Total ash: Not more than 7.0% (General rule 5004).
3. Acid-insoluble ash: Not more than 2.0% (General rule 5004).

Assay:

1. Ginsenoside Rg_1, Ginsenoside Rb_1, Notoginsenoside R_1:
   (1) Mobile phase: A solution of acetonitrile as the mobile phase A, and a solution of water as the mobile phase B.
   (2) Reference standard solution: Weigh accurately a quantity of ginsenoside Rg_1, Rb_1, and notoginsenoside R_1 and dissolve in methanol to produce a solution containing 0.4 mg, 0.4 mg and 0.1 mg per mL of each.
   (3) Sample solution: Weigh accurately 0.6 g of powdered sample, add accurately 50 mL of methanol, weighed again, stand overnight, place in a water bath at 80℃ for 2 hours, cool and weigh again, add methanol to complement weight loss, shake and filter. Use the filtrate.
   (4) Chromatographic system: The liquid chromatography is equipped with an ultraviolet absorption photometer (wavelength: 203 nm) and a column packed with octadecylsilanized silica gel. Program the chromatographic system as follows. The number of theoretical plates of the peak of notoginsenoside R_1 should not be less than 4,000.

Time (min)	Mobile phase A (%)	Mobile phase B (%)
0~12	19	81
12~60	19→36	81→64

(5) Procedure: Inject accurately 10 μL of each of the reference standard solution and the sample solution into the liquid chromatography apparatus and calculate the content.

2. Water extractives: Carry out the method for determination of water extractives (General rule 5006).
3. Dilute ethanol extractives: Carry out the method for determination of dilute ethanol-soluble extractives (General rule 5006).

Storage: Refrigerate or store in a cool and dry place, and protect from insects.
Usage: Blood-regulating medicinal (Hemostatic medicinal).
Dosage: 3~10 g for decocting, 1~1.5 g for powdering.

NOTOPTERYGII RHIZOMA ET RADIX
羌活
Ciang Huo / Qiang Huo
Notopterygium Rhizome and Root

Notopterygium rhizome and root is the dried rhizome and root of *Notopterygium incisum* Ting ex H. T. Chang or *Notopterygium forbesii* Boiss. (Fam. Umbelliferae).
It contains not less than 18.0% of dilute ethanol-soluble extractives, not less than 15.0% of water extractives and not less than 0.8% (v/w) of volatile oil.

Description:
1. Rhizome and root of *Notopterygium incisum*: Cylindrical, branched less, 4~13 cm in length, 0.6~2.5 cm in diameter. Externally dark brown or blackish-brown, with dense protuberant annulations, like a silkworm, commonly known as "Can Qiang", or internodes elongated like the nodes of a bamboo, commonly known as " Zhu Jie Qiang", nodes with dotted protuberant root scars, apex with round stem scars. Texture light and loose, fracture uneven, bark and pith yellowish-brown, with numerous clefts, scattered with oil dots (secretory cavities), wood pale yellow, with cleft rays. Odor, aromatic; taste, slightly bitter and pungent.
2. Rhizome and root of *Notopterygium forbesii*: Rhizome subcylindrical, apex remained with stems and leaf sheaths, externally brown, with dense annulations, remained with protuberant rootlet or its scars, with dense transverse lenticels; root subconical, 8~15 cm in length, 0.6~3 cm in diameter, with longitudinally wrinkles and transverse lenticels, commonly known as "Tiao Qiang". Some rhizome large and stout, irregularly nodiform, apex with several stem bases, roots relatively thin, commonly known as "Datou Qiang". Texture loose and fragile, fracture slightly even, bark brown, wood pale yellow, scattered with indistinct oil dots.

Microscopic identification:
1. **Transverse section:**
   (1) Rhizome and root of *Notopterygium incisum*: Cork composed of over 10 layers of cork cells. Cortex narrow. Phloem with many clefts. Cambium in a ring. Xylem with many vessels present. Pith broad. Phloem, pith and rays all contain numerous secretory canals. Secretory canals rounded or irregularly long-rounded, up to about 200 μm in diameter, containing yellowish-brown oil contents.
   (2) Rhizome and root of *Notopterygium forbesii*: Vessels rare, vessel bundles and flaky xylem fiber bundles arranged alternately. Pith relatively broad. Secretory canals up to about 180 μm in diameter.
2. **Powder:**
   (1) Rhizome and root of *Notopterygium incisum*: Brownish-yellow. Secretory cells of secretory canals mostly slender in lateral view, walls thin or slightly thickened, containing pale yellow secretions and starch gelatinous contents, and usually containing golden or yellowish-brown linear secretions. Parenchymatous cells mainly elongated, mostly containing pale yellow secretions and oil droplets, and filled with starch granules. Reticulate and bordered-pitted vessels 13~52 μm in diameter; spiral vessels 7~23 μm in diameter, some reticulate vessels up to about 32 μm in diameter. Cork cells in lateral view multiseriate, occasionally with a rhytidome outside, filled with yellowish-brown or brown contents; anticlinal walls thin in surface view, slightly curved. Simple starch granules subrounded or oblong, hilum and striations indistinct; compound granules composed of 2~3 components; mass-like secretions yellowish-brown, varying in size.
   (2) Rhizome and root of *Notopterygium forbesii*: Grayish-yellow. Parenchymatous cells fusiform or slender, fusiform ones 20~38 μm in diameter, walls slightly thickened with oblique crisscross striations distinctly, some cells with very thin transverse septa; slender ones 10~27 μm in diameter, walls thin and with some cell boundaries indistinct. Secretory cells of secretory canals slender in lateral view, containing pale yellow secretions and starch gelatinous contents; linear secretions rare.

Thin layer chromatographic identification test (General rule 1010.3):

1. Sample solution: Add 1.0 g of powdered sample to 5 mL of methanol, ultrasonicate for 20 minutes, stand and use the supernatant.
2. Reference drug solution: Use 1.0 g of the reference drug as the same method described above.
3. Reference standard solution: Weigh accurately a quantity of nodakenin and dissolve in methanol to produce a solution containing 0.5 mg per mL.
4. Procedure: Use silica gel plate with 3% sodium acetate as the coating substance and a solution of chloroform and methanol (8:2) as the developing solvent. Apply 2~4 μL of each of the above solutions to the plate. Once the top of the solvent rise to about 5~10 cm from the origin, dry in air. Examine under the ultraviolet light at 365 nm. The spots in the chromatogram obtained from the sample solution correspond in R_f values and color to the spots in the chromatogram obtained from the reference drug solution and the reference standard solution.

Impurities and other requirements:

1. Loss on drying: Not more than 14.0% under heating at 105℃ for 5 hours (General rule 5008).
2. Total ash: Not more than 6.0% (General rule 5004).
3. Acid-insoluble ash: Not more than 3.0% (General rule 5004).
4. Total heavy metals: Not more than 10.0 ppm (General rule 3005).
5. Arsenic (As): Not more than 5.0 ppm (General rule 3006, 3049, 3050).

Assay:

1. Water extractives: Carry out the method for determination of water extractives (General rule 5006).
2. Dilute ethanol extractives: Carry out the method for determination of dilute ethanol-soluble extractives (General rule 5006).
3. Volatile oil: Carry out the method for determination of volatile oil (General rule 5007).

Storage: Refrigerate or store in a cool and dry place, and protect from mold and insects.
Usage: Exterior-releasing medicinal (Wind-cold dispersing medicinal).
Dosage: 3~10 g.

OLIBANUM
乳香
Ru Siang / Ru Xiang
Frankincense

Frankincense is the dried resin exuding from the bark of *Boswellia carterii* Birdw. and similar species (Fam. Burseraceae).

It contains not less than 6.0% of dilute ethanol-soluble extractives and not less than 12.0% of water extractives.

Description: Drop-like or irregular pieces, about 0.5~3 cm in length, occasionally agglutinated into masses. Externally pale yellow or with slightly green, blue or reddish-brown, translucent, covered with yellow dust-like powder, dull after removing the powder. Texture hard and fragile, fracture waxy, dull, some with slightly glass-like luster. Odor, slightly aromatic; taste, weak, slightly bitter. Softened when heating, with a slight aroma, smoke and black residues after burned.

Thin layer chromatographic identification test (General rule 1010.3):

1. Sample solution: Add 3.0 g of powdered sample to 10 mL of ethanol, ultrasonicate for 2 hours, filter, evaporate and make up the filtrate to 5 mL.
2. Reference drug solution: Use 3.0 g of the reference drug as the same method described above.
3. Procedure: Use silica gel F_{254} as the coating substance and a solution of *n*-hexane and ethyl acetate (4:1) as the developing solvent. Apply 5 μL of each of the above solutions to the plate. Once the top of the solvent rise to about 5~10 cm from the origin, dry in air. Spray with a solution of vanillin in sulfuric acid (Vanillin/H_2SO_4 TS), heat at 105℃ until the spots become visible and examine under visible light. The spots in the chromatogram obtained from the sample solution correspond in R_f values and color to the spots in the chromatogram obtained from the reference drug solution.

Impurities and other requirements:

1. Loss on drying: Not more than 8.0% under heating at 105℃ for 5 hours (General rule 5008).
2. Total ash: Not more than 3.0% (General rule 5004).
3. Acid-insoluble ash: Not more than 0.5% (General rule 5004).

Assay:

1. Water extractives: Carry out the method for determination of water extractives (General rule 5006).
2. Dilute ethanol extractives: Carry out the method for determination of dilute ethanol-soluble extractives (General rule 5006).

Storage: Store in a cool and dry place.
Usage: Blood-activating and stasis-dispelling medicinal.
Dosage: 3~6 g.
Precaution and warning: Forbidden during pregnancy.

OPHIOPOGONIS RADIX
麥門冬
Mai Men Dong / Mai Men Dong
Dwarf Lilyturf Root Tuber

Dwarf lilyturf root tuber is the dried root tuber of *Ophiopogon japonicus* (L. f.) Ker Gawl. (Fam. Liliaceae), commonly known as "Mai Dong".
It contains not less than 50.0% of dilute ethanol-soluble extractives and not less than 55.0% of water extractives.

Description: Fusiform, flattened or cylindrical, 1.5~3.5 cm in length, 3~7 mm in diameter in the middle part. Externally yellowish-white or pale yellow, translucent, with deeply and finely longitudinally wrinkles, sometimes one end exposed with a fine and small stele. Texture tough and viscosity when moistened, fracture whitish, horny, center with a fine and small stele. Odor, slightly aromatic; taste, sweetish and slightly bitterish, viscous on chewing.

Microscopic identification:

1. **Transverse section:** Velamen composed of 3~5 rows of lignified cells of subsquare, subrectangular or polygonal shape. Exodermal cells wall slightly thickened. Cortex broad, scattered with mucilage cells containing raphides of calcium oxalate of 2 types: one type is thin and short, the other type is thicker and longer. Stone cell layer composed of 1~2 rows of cells located outside of the endodermis, the shape of the cells long polygonal to subpolygonal, with the inner and lateral wall thickened, and containing dense pits. Endodermis composed of cells with evenly thickened and lignified wall, as well as passage cells. Pericycle relatively small, composed of 1~2 rows of parenchymatous cells. Phloem bundles 16~22, located between two star-angles of the xylem bundles. Xylem composed of vessels, tracheids, xylem fibers and lignified cells in the inner side, linking up to a ring. Pith small, with subrounded parenchymatous cells.
2. **Powder:** Pale yellowish-brown. Raphides of calcium oxalate relatively numerous, scattered or in bundles located in subrounded to elliptical mucilage cells; the thin type 12~65 μm in length, some are thicker and longer, up to 129 μm in length. Stone cells subsquare or rectangular, 22~64 μm in diameter, up to 180 μm in length, wall up to 16 μm thick, occasionally with one side extremely thin, pits dense, flatten-elliptical or short slit-shaped, with relatively thick pit canals. Endodermal cells rectangular or long strip-shaped, 54~216 μm in length, 20~37 μm in diameter, wall up to 7 μm thick, evenly thickened or one side slightly thin, lignified, pits dotted and relatively sparse, pit canals distinct. Xylem fibers slender, the end oblique, 16~36 μm in diameter, walls slightly thickened and lignified, pits obliquely cleft-shaped, mostly criss-cross or into V-shaped. Pitted and reticulate tracheids 14~24 μm in diameter.

Thin layer chromatographic identification test (General rule 1010.3):

1. Sample solution: Add 1.0 g of powdered sample to 10 mL of methanol, heat and shake in the water bath for 5 minutes, cool, filter and use the filtrate.
2. Reference drug solution: Use 1.0 g of the reference drug as the same method described above.
3. Procedure: Use silica gel F_{254} as the coating substance and a solution of chloroform and acetone (1:1) as the developing solvent. Apply 5 μL of each of the above solutions to the plate. Once the top of the solvent rise to about 5~10 cm from the origin, dry in air. Spray with a solution of *p*-anisaldehyde in sulfuric acid (*p*-Anisaldehyde/H_2SO_4 TS) and heat at 105℃ for 5 minutes until the spots become visible. Examine under the visible light. The spots in the chromatogram obtained from the sample solution correspond in R_f values and color to the spots in the chromatogram obtained from the reference drug solution.

Impurities and other requirements:

1. Total ash: Not more than 4.0% (General rule 5004).
2. Acid-insoluble ash: Not more than 1.0% (General rule 5004).
3. Total heavy metals: Not more than 10.0 ppm (General rule 3005).
4. Arsenic (As): Not more than 5.0 ppm (General rule 3006, 3049, 3050).

Assay:

1. Water extractives: Carry out the method for determination of water extractives (General rule 5006).
2. Dilute ethanol extractives: Carry out the method for determination of dilute ethanol-soluble extractives (General rule 5006).

Storage: Refrigerate or store in a cool and dry place, and protect from insects.
Usage: Tonifying and replenishing medicinal (Yin-tonifying medicinal).
Dosage: 6~15 g.

ORYZAE GERMINATUS FRUCTUS
穀芽
Gu Ya / Gu Ya
Rice-grain Sprout

Rice-grain sprout is the dried and germinated ripe caryopsis of *Oryza sativa* L. (Fam. Gramineae).
It contains not less than 4.0% of dilute ethanol-soluble extractives and not less than 4.0% of water extractives.

Description: Oblong, slightly flattened, both ends slightly protuberant, 6~10 mm in length, 3~4 mm in width. Shell (palea) hard, yellow, with 5 distinctly ribs and cilia, base with 2 liner lodicules, pale yellowish-white, memberanous, fibrous roots (primary root) pale yellow derived from one side lodicule. Lemma thinly memberanous, smooth, pale yellowish-white, containing 1 seed. Texture hard, fracture white, starchy. Odor, slight; taste slightly sweet.

Microscopic identification:

1. **Powder:** Yellowish-white. Simple starch granules irregularly polyhedral, with acute edge, 2~10 μm in diameter, pits occasionally found, without striations; compound granules ovate or round.

Impurities and other requirements:

1. Total ash: Not more than 8.0% (General rule 5004).
2. Acid-insoluble ash: Not more than 5.0% (General rule 5004).

Assay:

1. Water extractives: Carry out the method for determination of water extractives (General rule 5006).
2. Dilute ethanol extractives: Carry out the method for determination of dilute ethanol-soluble extractives (General rule 5006).

Storage: Refrigerate or store in a cool and dry place, and protect from mold and insects.
Usage: Disgestant medicinal.
Dosage: 9~30 g.

OSTREAE CONCHA
牡蠣
Mu Li / Mu Li
Oyster Shell

Oyster shell is the dried shell of *Ostrea gigas* Thunb., *Ostrea talienwhanensis* Crosse, *Ostrea rivularis* Gould or *Crassostrea angulata* Lamarck (Fam. Ostreidae).

Description:

1. Shell of *Ostrea gigas*: Long and thick, long strip or long oval, 10~50 cm in length, 4~15 cm in width, dorsal and ventral edges almost parallel. The right shell relatively small, scales strong and thick, arranged in layers or striated. The outer surface smooth or with several depressions, pale purple, grayish-white or yellowish-brown; the inner surface porcelain white, without denticles at both sides of the umbo. The left shell deeply depressed, scales bigger and rougher than those of the right shell, attachment surface of the umbo small. Texture hard, fracture stratiform, white. Odorless; taste, slightly salty.
2. Shell of *Ostrea talienwhanensis*: Subtriangular, dorsal and ventral edges V-shaped. The outer surface of the right shell pale yellow, concentric scales arranged loosely and undulated up and down; the inner surface white. The left shell bearing strong and thick concentric scales, several distinct ribs radiated from the umbo, the inner surface concaved in box-shaped; hinge surface small. Fracture stratiform indistinct, cuticle overlapping.
3. Shell of *Ostrea rivularis*: Subrounded, oval or triangular. The outer surface of the right shell slightly uneven, gray, purple, brown, yellow, etc.; concentric scales in a ring, thin and fragile when immature and overlapped one another after several years of growth. The inner surface white, occasionally the edge pale purple. The left shell relatively larger and thicker. Fracture stratiform distinct, rough and curved.

Microscopic identification:

1. **Transverse section:**
   (1) Shell of *Ostrea talienwhanensis*: The grinding slices show leaf blade-shaped structures, curved irregularly, 3~11 μm in width, arrange parallelly, occasionally slightly crossed.
   (2) Shell of *Ostrea rivularis*: The leaf blades curved irregularly, 5~10 μm in width, arrange densely.
2. **Powder:**
   (1) Shell of *Ostrea talienwhanensis*: Cream-colored, with pale gray fluorescence, mostly aggregated. Scattered particles mostly irregularly strip-shaped, edges irregular. The slightly transparent lamellar particles show leaf blade-shaped structures.
   (2) Shell of *Ostrea rivularis*: Snow white-colored, with purplish-gray fluorescence, opaque, edges obtusely round, occasionally adhering to brownish-red or purplish-black particles.

Identification:

1. Examine the powder under the ultraviolet light, *Ostrea talienwhanensis* gives a result of pale gray fluorescence; *Ostrea rivularis* gives a result of purplish-gray fluorescence.
2. Take 1.0 g of powdered sample, add 10 mL of dilute hydrochloric acid, heat, sample dissolve, bubbles containing carbon dioxide is produced, solution is slightly turbid and pale red, with remains of transparent and flaky semi-floating substance.

Impurities and other requirements:

1. Loss on drying: Not more than 2.0% under heating at 105℃ for 5 hours (General rule 5008).
2. Acid-insoluble ash: Not more than 9.5% (General rule 5004).

Storage: Store in a ventilated and dry place.
Usage: Liver-pacifying and wind-extinguishing medicinal.
Dosage: 9~30 g for decocting (should be decocted earlier), 1~3 g for powdering.

PAEONIAE ALBA RADIX
白芍
Bai Shao / Bai Shao
Peony Root

Peony root is the peeled and dried root of *Paeonia lactiflora* Pall. (Fam. Ranunculaceae).
It contains not less than 10.0% of dilute ethanol-soluble extractives, not less than 15.0% of water extractives and not less than 1.0% of paeoniflorin.

Description: Cylindrical, 5~8 cm in length, 1~3 cm in diameter. Externally pale brown or whitish, glossy, with indistinct long transverse lenticels, longitudinal wrinkles and rootlet scars, occasionally remained with brown cork. Texture compact, uneasily broken, fracture whitish or pale red, horny, cambium ring distinct and rays radial. Odor, slight; taste, slightly bitter and sour.

Microscopic identification:
1. **Transverse section:** Cork composed of several layers of brown cells. Cortex and phloem relatively narrow. Cambium presents in a ring. Xylem rays composed of about 30 rows of cells, vessels usually arranged tangentially with xylem fibers and xylem parenchymatous cells. Parenchymatous cells contain clusters of calcium oxalate and starch granules.
2. **Powder:** Off-white. Parenchymatous cells contain gelatinized starch granules, clusters of calcium oxalate relatively abundant, 11~35 μm in diameter, often contain 2 to several cluster crystals in one cell, crystal cells present as longitudinal rows. Xylem fibers long-fusiform, 15~40 μm in diameter, walls thickened. Vessels bordered-pitted or reticulate, 20~65 μm in diameter.

Thin layer chromatographic identification test (General rule 1010.3):
1. Sample solution: Take 1.0 g of powdered sample to a round-bottom flask, add 10 mL of methanol, heat under reflux for 30 minutes, cool and filter, make up to 10 mL, and use the filtrate.
2. Reference drug solution: Use 1.0 g of the reference drug as the same method described above.
3. Reference standard solution: Weigh accurately a quantity of paeoniflorin and dissolve in methanol to produce a solution containing 1.0 mg per mL.
4. Procedure: Use silica gel F_{254} as the coating substance and the lower layer of a solution of chloroform, methanol and water (26:14:5) as the developing solvent. Apply 10 μL of each of the above solutions to the plate. Once the top of the solvent rise to about 5~10 cm from the origin, dry in air. Spray with a solution of *p*-anisaldehyde in sulfuric acid (*p*-Anisaldehyde/H_2SO_4 TS), heat at 105℃ for 2 minutes, and examine under visible light. The spots in the chromatogram obtained from the sample solution correspond in R_f values and color to the spots in the chromatogram obtained from the reference drug solution and the reference standard solution.

Impurities and other requirements:
1. Loss on drying: Not more than 13.0% under heating at 105℃ for 5 hours (General rule 5008).
2. Total ash: Not more than 4.0% (General rule 5004).
3. Acid-insoluble ash: Not more than 1.0% (General rule 5004).
4. Total heavy metals: Not more than 10.0 ppm (General rule 3005).
5. Cadmium (Cd): Not more than 0.3 ppm (General rule 3049, 3050).
6. Lead (Pb): Not more than 5.0 ppm (General rule 3007, 3049, 3050).
7. Mercury (Hg): Not more than 0.2 ppm (General rule 3049).
8. Arsenic (As): Not more than 2.0 ppm (General rule 3006, 3049, 3050).
9. Copper (Cu): Not more than 20.0 ppm (General rule 3049).

Assay:
1. Paeoniflorin:
   (1) Mobile phase: A solution of water and acetonitrile (4:1).
   (2) Reference standard solution: Weigh accurately10 mg of paeoniflorin and dissolve in dilute methanol (1 in 2) to produce a 100 mL solution.
   (3) Sample solution: Weigh accurately 0.5 g of powdered sample, accurately add 50 mL of dilute methanol (1 in 2), heat under reflux for 30 minutes, cool and filter. The residue add 50 mL of dilute methanol (1 in 2), operating above the method, combine the supernatant, add dilute methanol (1 in 2) to 100 mL.
   (4) Chromatographic system: The liquid chromatography is equipped with an ultraviolet absorption photometer (wavelength: 230 nm) and a column (4~6 mm × 15~25 cm) packed with octadecylsilanized silica gel (5~10 μm in particle diameter). The retention time of paeoniflorin is about 10 minute. Inject reference standard solution into the liquid chromatography apparatus for five times, and record the peak areas. The relative standard deviation of the peak area of paeoniflorin should not be more than 1.5%.
   (5) Procedure: Inject accurately 10 μL of each of the reference standard solution and the

sample solution into the liquid chromatography apparatus, and calculate the content.

2. Water extractives: Carry out the method for determination of water extractives (General rule 5006).
3. Dilute ethanol extractives: Carry out the method for determination of dilute ethanol-soluble extractives (General rule 5006).

Storage: Store in a ventilated and dry place, and protect from insects.
Usage: Tonifying and replenishing medicinal (Blood-tonifying medicinal).
Dosage: 6~15 g.

PAEONIAE RUBRA RADIX
赤芍
Chih Shao / Chi Shao
Red Peony Root

Red peony root is the dried root of *Paeonia lactiflora* Pall. or *Paeonia veitchii* Lynch (Fam. Ranunculaceae).
It contains not less than 27.0% of dilute ethanol-soluble extractives, not less than 26.0% of water extractives and not less than 1.8% of paeoniflorin.

Description:
1. Root of *Paeonia lactiflora*: Cylindrical, occasionally thick at the middle, 10~40 cm in length, 0.6~3 cm in diameter. Externally dark brown or purplish-brown, with rough and slightly twined longitudinally wrinkles and transverse lenticels, older root relatively rough, cork easily exfoliated to scaly. Texture hard and fragile, easily broken, fracture chalk-white, yellowish-white or purplish-white, bark narrow, color dark, wood with distinct radial pith ray, occasionally with clefts. Odor, slight; taste, slightly bitter and astringent.
2. Root of *Paeonia veitchii*: 5~20 cm in length. Externally with the scars of cork, brownish-red or dark brown occasionally. Texture loose, fracture blackish-brown in bark, wood yellowish-white. Peeled one externally pale purplish-red or chalk-white, fracture yellowish-white.

Microscopic identification:
1. **Transverse section:**
   (1) Root of *Paeonia lactiflora*: Cork composed of 5~10 layers of cork cells, rhytidome occasionally remained. Parenchymatous cells in the cortex elongated tangentially. Phloem narrow. Cambium in an undulating ring. Xylem rays broad; vessels singly scattered or in groups, arranged alternately with xylem fibers; vessels and xylem fibers aggregated in two groups in the center. Cortex, phloem and parenchymatous cells of rays occasionally with large pits. Parenchymatous cells contain starch granules, occasionally containing clusters of calcium oxalate.
   (2) Root of *Paeonia veitchii*: Cork composed of several layers of brown cells, rhytidome occasionally remained. Cortex and phloem narrow. Cambium in an undulating ring. Xylem vessels mainly occurring near cambium, individually scattered or in groups; xylem fibers arranged alternately with vessels; some vessels and xylem fibers scattered in the center. Parenchymatous cells contain starch granules, occasionally containing clusters of calcium oxalate.
2. **Powder:**
   (1) Root of *Paeonia lactiflora*: Pale brownish-red. Clusters of calcium oxalate usually arrange in several to dozens rows longitudinally, 7~41 μm in diameter; crystal cells relatively small, walls curved, occasionally one cell containing two to several crystals. Xylem fibers long-fusiform, 14~38 μm in diameter, walls 5~13 μm thick, bordered pits large, pit apertures oblique slit-shaped, some relatively wide and occasionally crossed in cruciate shape, few phloem fibers containing oblique simple pits. Cork cells long strip-shaped, rectangular or long-polygonal in surface view, up to 225 μm in length; some cells filled with brown or reddish-brown masses. Bordered-pitted vessels oval, 25~78 μm in diameter, some elongated laterally forming reticulate or scalariform, perforations 1~4 in end or lateral walls. Starch granules up to about 15 μm in diameter.
   (2) Root of *Paeonia veitchii*: Brown. Xylem fibers 25~30 μm in diameter; phloem fibers 14~36 μm in diameter. Starch granules up to about 21 μm in diameter.

Thin layer chromatographic identification test (General rule 1010.3):
1. Sample solution: Add 2.0 g of powdered sample to 10 mL of methanol, place in a water bath for 5 minutes, filter and use the filtrate.
2. Reference drug solution: Use 2.0 g of the reference drug as the same method described above.
3. Reference standard solution: Weigh accurately a quantity of paeoniflorin and dissolve in 1 mL of methanol to produce a solution containing 2.0 mg per mL.
4. Procedure: Use silica gel F_{254} as the coating substance and a solution of ethyl acetate, methanol and water (8:2:1) as the developing solvent. Apply 5 μL of each of the above solutions to the plate. Once the top of the solvent rise to about 5~10 cm from the origin, dry in air. Spray with a 10% solution of sulfuric acid in ethanol (H_2SO_4/EtOH TS), heat at 105℃ until the spots become visible. The spots in the chromatogram obtained from the

sample solution correspond in R_f values and color to the spots in the chromatogram obtained from the reference drug solution and the reference standard solution.

Impurities and other requirements:

1. Loss on drying: Not more than 13.0% under heating at 105℃ for 5 hours (General rule 5008).
2. Total ash: Not more than 10.0% (General rule 5004).
3. Acid-insoluble ash: Not more than 1.5% (General rule 5004).
4. Arsenic (As): Not more than 5.0 ppm (General rule 3006, 3049, 3050).

Assay:

1. Paeoniflorin:
   (1) Mobile phase: A solution of water and acetonitrile (4:1). The ratio varies as required.
   (2) Reference standard solution: Weigh accurately 10.0 mg of paeoniflorin and dissolve in 50% methanol to produce a 100 mL solution.
   (3) Sample solution: Weigh accurately 500.0 mg of powdered sample, dissolve in a 50 mL solution of 50% methanol, heat and reflux for 30 minutes, cool, and filter. Take the residue operate as the same method described above. Mix all filtrates and add 50% methanol to 100 mL.
   (4) Chromatographic system: The liquid chromatography is equipped with an ultraviolet absorption photometer (wavelength: 230 nm) and a column (4~6 mm × 15~25 cm) packed with octadecylsilanized silica gel. The column temperature is maintained at 20℃. The retention time of paeoniflorin is about 10 minute.
   (5) Procedure: Inject accurately 20 μL of each of the reference standard solution and the sample solution into the liquid chromatography apparatus, and calculate the content.
2. Water extractives: Carry out the method for determination of water extractives (General rule 5006).
3. Dilute ethanol extractives: Carry out the method for determination of dilute ethanol-soluble extractives (General rule 5006).

Storage: Refrigerate or store in a cool and dry place, and protect from insects.
Usage: Blood-regulating medicinal (Blood-activating and stasis-dispelling medicinal).
Dosage: 3~12 g.

PANACIS QUINQUEFOLII RADIX
西洋參
Si Yang Shen / Xi Yang Shen
American Ginseng

American ginseng is the dried root of *Panax quinquefolium* L. (Fam. Araliaceae).
It contains not less than 25.0% of dilute ethanol-soluble extractives, not less than 25.0% of water extractives and not less than 1.0% of ginsenoside Rb_1.

Description: Long conical, fusiform or cylindrical, 3~12 cm in length, 0.5~2 cm in diameter. Externally pale yellowish-brown or yellowish-white, swollen, with transverse striations and irregular in longitudinal wrinkles. Rhizome (lutou) removed or remained, with fine transverse wrinkles densely arranging into annulations at the upper part, 1~several forked branch of lateral or residual root scar at the lower part. Texture hard, fracture even, pale yellow or whitish, slightly starchy, cambium ring dark colored, scattered with yellowish-brown or reddish-brown dots (resin canals) in bark. Odor, slightly characteristic; taste, slightly bitter and sweet.

1. American ginseng dried (Yuan Pi Shi Yang Sen): Wild one relatively small, thick as a thumb, externally brownish-yellow, annulations arranged densely, color dark and distinct, fracture yellowish-white, texture light, odor, aromatic; taste, strong. Cultivated one externally pale yellow, bark fine, annulations arranged relatively loose, color relatively light, texture compact and heavy, odor, relatively slight.
2. American ginseng peeled (Fen Guang Shi Yang Sen): Wild one relatively small, occasionally branched, externally light white, annulations fine and arranged densely, texture light, odor, aromatic; taste, strong. Cultivated one externally white, annulations arranged loose, texture compact and heavy, odor, slight.

Microscopic identification:

1. **Transverse section:** Cork composed of several layers of upright-type cells, yellowish-brown. Cortex narrow, some cells contain clusters of calcium oxalate. Clefts existed in the outer part of phloem; parenchymatous cells arranged densely in the inner part of phloem, scattered with resin canals containing yellowish-brown secretions. Cambium composed of 3~5 layers of rectangular cells. Xylem vessels singly scattered or several in groups, with interrupted radial arrangement, occasionally unlignified fibers present adjacent vessels. Parenchymatous cells filled with starch granules.
2. **Powder:** Pale yellow or pale yellowish-white. Resin canal longitudinal fragment present, containing golden-yellow oil droplets and some orange-red strip-shaped or mass-shaped secretions. Secretory cells contain oil droplets or granules.

Clusters of calcium oxalate 17~78 μm in diameter, angles mostly acute. Individual starch granules subrounded or suboblong, 7~22 μm in diameter, hilum mostly dotted, cleft-shaped or V-shaped; compound granules few, composed of 2~8 components. Vessels mainly reticulated and scalariform, up to 45 μm in diameter. Cork cells subpolygonal, subrectangular or subsquare in surface view, walls thin and undulately curved. In longitudinal view, phelloderm cells contain pits arranged radically. Parenchymatous cells subrounded or long-subrounded, containing fine particles.

Thin layer chromatographic identification test (General rule 1010.3):

1. Sample solution: Add 0.2 g of powdered sample to 5 mL of methanol in a centrifuge tube, ultrasonicate for 30 minutes, centrifuge for 10 minutes, filter, and use the filtrate.
2. Reference drug solution: Use 0.2 g of the reference drug as the same method described above.
3. Reference standard solution: Weigh accurately a quantity of ginsenoside Rb_1, ginsenoside Re, and ginsenoside Rg_1 and dissolve in methanol to produce a solution containing 1.0 mg per mL of each.
4. Procedure: Use silica gel F_{254} as the coating substance and a solution of dichloromethane, ethyl acetate, methanol and water (15:40:22:10) as the developing solvent. Apply 5 μL of each of the above solutions to the plate. Once the top of the solvent rise to about 5~10 cm from the origin, dry in air. Spray with a 10% solution of sulfuric acid in ethanol (H_2SO_4/EtOH TS), heat at 105℃ until the spots become visible, examine under the ultraviolet light at 365 nm. The spots in the chromatogram obtained from the sample solution correspond in R_f values and color to the spots in the chromatogram obtained from the reference drug solution and reference standard solution.

Impurities and other requirements:

1. Loss on drying: Not more than 13.0% under heating at 105℃ for 5 hours (General rule 5008).
2. Total ash: Not more than 7.0% (General rule 5004).
3. Acid-insoluble ash: Not more than 1.0% (General rule 5004).
4. Total heavy metals: Not more than 20.0 ppm (General rule 3005).
5. Arsenic (As): Not more than 2.0 ppm (General rule 3006, 3049, 3050).
6. Pesticide residues:
   (1) The total DDT content: Not more than 1.0 ppm (General rule 3052).
   (2) The total BHC content: Not more than 0.9 ppm (General rule 3052).
   (3) The total PCNB content: Not more than 1.0 ppm (General rule 3052).

Assay:

1. Ginsenoside Rb_1:
   (1) Mobile phase: A solution of water and acetonitrile (7:3). The ratio varies as required.
   (2) Reference standard solution: Place ginsenoside Rb_1 in a phosphorus pentoxide dryer, depressurize at 50℃ (under 5 mmHg) for 12 hours. Weigh accurately 7.5 mg and dissolve in methanol to 25 mL.
   (3) Sample solution: Weigh accurately 500 mg of powdered sample in a conical flask, add 50 mL of methanol, heat under reflux for 90 minutes, cool, weigh again, replenished the loss of the weight with methanol, mix well then filter. Accurately weighed 25 mL of the filtrate in a evaporate dish, evaporate to dryness. Transfer the residue to a separatory funnel with 50 mL of *n*-butanol saturated with water, extract shaking twice each with 5 mL of ammonia solution, and combine the water extracts. Extract shaking twice each with 10 mL of *n*-butanol saturated with water, combine the *n*-butanol extracts, wash twice with 10-mL *n*-butanol saturated with water, combine the water extracts, and extract shaking twice each with 10 mL of *n*-butanol saturated with water. Combine all the *n*-butanol extracts, evaporate to dryness, the residue add methanol and transfer to 10-mL volumetric flask, add methanol to volume, mix well, filter through a 0.45-μm PTFE filter, and use the filtrate.
   (4) Chromatographic system: The liquid chromatography is equipped with an ultraviolet absorption photometer (wavelength: 203 nm) and a column (4~6 mm × 15~25 cm) packed with octadecylsilanized silica gel (5~10 μm in particle diameter). The column temperature is maintained at 40℃. Inject reference standard solution into the liquid chromatography apparatus for five times, and record the peak areas. The relative standard deviation of the peak area of ginsenoside Rb_1 should not be more than 1.5%.
   (5) Procedure: Inject accurately 10~20 μL of each of the reference standard solution and the sample solution into the liquid chromatography apparatus, and calculate the content.
2. Water extractives: Carry out the method for determination of water extractives (General rule 5006).
3. Dilute ethanol extractives: Carry out the method for determination of dilute ethanol-soluble extractives (General rule 5006).

Storage: Refrigerate or store in a cool and dry place, preserve in a well-closed container, and protect from light, dust, insects and oil seeping.

Usage: Tonifying and replenishing medicinal (Qi-tonifying medicinal).
Dosage: 3~10 g.
Precaution and warning: Incompatible with Veratri Nigri Radix et Rhizoma.

PERILLAE CAULIS
紫蘇梗
Zih Su Geng / Zi Su Geng
Perilla Stem

Perilla stem is the dried stem of *Perilla frutescens* (L.) Britt. (Fam. Labiatae).
It contains not less than 2.0% of dilute ethanol-soluble extractives, not less than 3.0% of water extractives and not less than 0.10% of rosmarinic acid.

Description: Square, four angles obtuse, 30~90 cm in length, 0.5~1.5 cm in diameter in the middle part, up to 2 cm in diameter in the base. Externally purplish-brown or dark purple, with a longitudinal furrow of each sides, and with fine longitudinal striations, nodes slightly swollen, with opposite branch scars and leaf scars. Texture fragile and hard, fracture lobed, center with white and lax pith. Odor, slightly aromatic; taste, weak.

Microscopic identification:

1. **Transverse section:** Epidermis composed of 1 layer of tangentially elongated cells, young stems contain glandular hairs, glandular scales and non-glandular hairs. Above cortex showing several dozens layers of polygonal or oblong collenchymatous cells present at angular regions, inner layer showing several layers of rectangular or polygonal parenchymatous cells, containing yellowish-brown contents, scattered with pericyclic fiber bundles arranging in an interrupted ring, lignified to strongly lignified, stone cells occasionally visible at the inner side, slightly lignified to lignified. Phloem contains numerous yellowish-brown contents. Xylem well developed, vessels arranged radially, mainly bordered-pitted and pitted, scattered with xylem fibers, lignified to strongly lignified. Pith cells oblong, subrounded or polygonal, containing raphides crystals, prism crystals and yellowish-green contents.
2. **Powder:** Grayish-white. Parenchymatous cells of cortex polygonal, containing yellowish-brown contents, fibers singly scattered or in bundles, pale yellow to yellowish-brown, 12~40 μm in diameter. Xylem fibers mostly in bundles, usually linked with outer xylem cells, 12~56 μm in diameter, slightly lignified to lignified. Stone cells 20~60 μm in length, 10~40 μm in diameter, slightly lignified to lignified. Vessels bordered-pitted, pitted, spiral, reticulate and annular, 22~68 μm in diameter. Parenchymatous cells of xylem rectangular, 48~150 μm in length, 12~62 μm in diameter, slightly lignified to lignified. Pith cells extremely large, subrounded or oblong, wall thickened, containing raphides crystals, prism crystals and yellowish-green contents.

Thin layer chromatographic identification test (General rule 1010.3):

1. Sample solution: Add 3.0 g of powdered sample to 10 mL of petroleum ether (30~60℃), heat and shake in the water bath for 5 minutes, cool, filter and use the filtrate.
2. Reference drug solution: Use 3.0 g of the reference drug as the same method described above.
3. Procedure: Use silica gel F_{254} as the coating substance and a solution of petroleum ether (30~60 ℃) and ethyl acetate (19:1) as the developing solvent. Apply 5 μL of each of the above solutions to the plate. Once the top of the solvent rise to about 5~10 cm from the origin, dry in air. Spray with a solution of 2,4-dinitrophenylhydrazine (2,4-Dinitrophenylhydrazine TS) and heat at 105℃ for 2 minutes until the spots become visible. Examine under the visible light. The spots in the chromatogram obtained from the sample solution correspond in R_f values and color to the spots in the chromatogram obtained from the reference drug solution.

Impurities and other requirements:

1. Loss on drying: Not more than 10.0% under heating at 105℃ for 5 hours (General rule 5008).
2. Total ash: Not more than 6.0% (General rule 5004).
3. Acid-insoluble ash: Not more than 1.0% (General rule 5004).

Assay:

1. Rosmarinic acid:
   (1) Mobile phase: A solution of methanol and 0.1% formic acid (38:62). The ratio varies as required.
   (2) Reference standard solution: Weigh accurately a quantity of rosmarinic acid and dissolve in 60% acetone to produce a solution containing 40 μg per mL.
   (3) Sample solution: Weigh accurately 0.5 g of the powdered sample, transfer to a conical flask with stopper, accurately add 25 mL of 60% acetone, stopper tightly and weigh, ultrasonicate for 30 minutes, weigh again, replenish the loss of the weight with 60% acetone, mix well, filter and use the filtrate.
   (4) Chromatographic system: The liquid chromatography is equipped with an ultraviolet absorption photometer (wavelength: 330 nm) and a column packed with octadecylsilanized silica gel. The number of theoretical plates of the peak of rosmarinic acid should not be less than 3,000.

(5) Procedure: Inject accurately 10 μL of the reference standard solution and 5~20 μL of the sample solution into the liquid chromatography apparatus, and calculate the content.

2. Water extractives: Carry out the method for determination of water extractives (General rule 5006).
3. Dilute ethanol extractives: Carry out the method for determination of dilute ethanol-soluble extractives (General rule 5006).

Storage: Store in a ventilated and dry place.
Usage: Qi-regulating medicinal (Qi-moving medicinal).
Dosage: 5~9 g.

PERILLAE FOLIUM
紫蘇葉
Zih Su Ye / Zi Su Ye
Perilla Leaf

Perilla leaf is the dried leaf of *Perilla frutescens* (L.) Britt. (Fam. Labiatae).

Description: Mostly crumpled, rolled and broken, oval as whole, 4~11 cm in length, 2.5~9 cm in width. Apex acuminate or acute, base rounded or broadly cuneate, margin crenate. Both surfaces purple or the upper green and the lower purple, scattered with grayish-white hairs, and occurring numerous dented and dotted glandular scales on the lower surface. Petioles 2~7 cm in length, purple or purplish-green. Texture fragile. Odor, delicately aromatic; taste, slightly pungent.

Microscopic identification:

1. **Transverse section:** Epidermis composed of 1 row of fine and flat cells, with stomata, mostly distributed in lower epidermis. Glandular scales hemispheroidal, located at sunken spaces, non-glandular hairs mostly present in main vein. Palisade tissue of mesophyll composed of 1 layer of cells, containing clusters of calcium oxalate, spongy tissue several rows, arranging sparsely. Vascular bundles of main vein crescent-shaped, xylem vessels arranged radially, inside showing phloem, scattered with a few of fibers.
2. **Powder:** Dark green to brownish-green. Walls of upper epidermal cells sinuous, with distinct cutinized striations, scattered with a few of stomata, mostly diacytic, occasionally anomocytic; walls of lower epidermal cells sinuous, with relatively numerous stomata. Glandular hairs of 2 types: one type is glandular scales, the other type is small glandular hairs; glandular scales with head flatten-rounded, composed of 6~8 cells, containing yellow oil droplets, irregularly triangular in shape after broken, the stalk unicellular and short; small glandular hairs with head 1~2 cells, the stalk unicellular; non-glandular hairs composed of 2~8 cells, slightly sickle-shaped curved, occasionally with shrunken middle cells. Clusters of calcium oxalate extremely small, 4~8 μm in diameter, scattering in mesophyll cells.

Thin layer chromatographic identification test (General rule 1010.3):

1. Sample solution: Add 2.0 g of powdered sample to 20 mL of methanol, heat under reflux for 30 minutes, cool, filter and evaporate the filtrate to dryness, dissolve the residue to 10 mL.
2. Reference drug solution: Use 2.0 g of the reference drug as the same method described above.
3. Procedure: Use silica gel F_{254} as the coating substance and a solution of *n*-hexane and acetone (7:3) as the developing solvent. Apply 5 μL of each of the above solutions to the plate. Once the top of the solvent rise to about 5~10 cm from the origin, dry in air. Spray with a solution of *p*-anisaldehyde in sulfuric acid (*p*-Anisaldehyde/H_2SO_4 TS) and heat at 105℃ for 5 minutes until the spots become visible. Examine under the visible light. The spots in the chromatogram obtained from the sample solution correspond in R_f values and color to the spots in the chromatogram obtained from the reference drug solution.

Impurities and other requirements:

1. Pesticide residues:
   (1) The total DDT content: Not more than 0.2 ppm (General rule 3052).
   (2) The total BHC content: Not more than 0.2 ppm (General rule 3052).

Storage: Store in a cool and dry place.
Usage: Pungent-warm exterior-releasing medicinal.
Dosage: 5~9 g.

PERILLAE FRUCTUS
紫蘇子
Zih Su Zih / Zi Su Zi
Perilla Fruit

Perilla fruit is the dried ripe fruit of *Perilla frutescens* (L.) Britt. (Fam. Labiatae).
It contains not less than 2.0% of dilute ethanol-soluble extractives, not less than 2.0% of water extractives and not less than 0.25% of rosmarinic acid.

Description: Ovate or subspheroidal, 1.5~2.2 mm in diameter. Externally grayish-brown and brown, with slightly protuberant and dark brown reticulate striations, one acute side with pale and round scar, within a pointed fruit stalk scar. Pericarp thin and fragile, easily broken. Seed yellowish-white, testa membranous, cotyledons 2, whitish and oily. Odor, aromatic by pressing; taste, slightly pungent.

Microscopic identification:

1. **Transverse section:** Epidermis suberized, yellowish-brown, cell striations faintly visible, subfusiform; inside showing 1 layer of palisade cells, composed of stone cells, about 33 μm in length, cell boundaries indistinct and lignified; inside showing several layers of obliterated cells, yellowish-brown, scattered with slightly lignified vessels. Beneath obliterated cells showing 1 to several layers of heteromorphic stone cells, subpolygonal or fusiform, cell boundaries indistinct, walls varying in thickness, pits relatively dense, some lumens indistinct and slightly lignified, this layer separated from cotyledon cells and forming clefts. Cotyledon cells with the outermost layer cells smaller, subrectangular or flatten-oblong, inner cells larger, subpolygonal or subrectangular, wall thin, filled with starch granules and fatty oil droplets.
2. **Powder:** Grayish-brown. Epidermal cells of testa extremely flattened in sectional view, with hooked thickened walls; elliptical in surface view, walls with dense carving and hook-patterned thickened. Exocarp cells yellowish-brown, flattened in sectional view, outer walls with papillary protuberance; subrounded in surface view, with slightly curved and fine cuticle striations. Endocarp tissue composed of irregular heteromorphic stone cells in sectional view; subpolygonal in top view, cell borders indistinct, lumina stellate. Endosperm cells varying in size, containing oil droplets; some containing fine prisms of calcium oxalate. Cotyledon cells subrectangular, filled with oil droplets.

Thin layer chromatographic identification test (General rule 1010.3):

1. Sample solution: Add 5.0 g of powdered sample to 25 mL of methanol, shaking for 30 minutes, stand, filter and use the filtrate.
2. Reference drug solution: Use 5.0 g of the reference drug as the same method described above.
3. Procedure: Use silica gel F_{254} as the coating substance and a solution of *n*-hexane and ethyl acetate (5:2) as the developing solvent. Apply 5 μL of each of the above solutions to the plate. Once the top of the solvent rise to about 5~10 cm from the origin, dry in air. Spray with a solution of *p*-anisaldehyde in sulfuric acid (*p*-Anisaldehyde/ H_2SO_4 TS) and heat at 105℃ until the spots become visible. The spots in the chromatogram obtained from the sample solution correspond in R_f values and color to the spots in the chromatogram obtained from the reference drug solution.

Impurities and other requirements:

1. Loss on drying: Not more than 8.0% under heating at 105℃ for 5 hours (General rule 5008).
2. Total ash: Not more than 12.0% (General rule 5004).
3. Acid-insoluble ash: Not more than 5.0% (General rule 5004).

Assay:

1. Rosmarinic acid:
   (1) Mobile phase: A solution of methanol and 0.1% formic acid (40:60). The ratio varies as required.
   (2) Reference standard solution: Weigh accurately a quantity of rosmarinic acid and dissolve in methanol to produce a solution containing 80 μg per mL.
   (3) Sample solution: Weigh accurately 0.5 g of the powdered sample, transfer to a conical flask with stopper, accurately add 50 mL of 80% methanol, stopper tightly and weigh, heat under reflux for 2 hours, cool, weigh again, replenish the loss of the weight with 80% methanol, mix well, filter, and use the successive filtrate.
   (4) Chromatographic system: The liquid chromatography is equipped with an ultraviolet absorption photometer (wavelength: 330 nm) and a column packed with octadecylsilanized silica gel. The number of theoretical plates of the peak of rosmarinic acid should not be less than 3,000.
   (5) Procedure: Inject accurately 10 μL of the reference standard solution and 20 μL of the sample solution into the liquid chromatography apparatus, and calculate the content.
2. Water extractives: Carry out the method for determination of water extractives (General rule 5006).
3. Dilute ethanol extractives: Carry out the method for determination of dilute ethanol-soluble extractives (General rule 5006).

Storage: Store in a cool and dry place and preserve in a well-closed container, and protect from insects.
Usage: Phlegm-dispelling medicinal (Cough-suppressing and panting-calming medicinal).
Dosage: 3~10 g.

PERSICAE SEMEN
桃仁
Tao Ren / Tao Ren
Peach Seed

Peach seed is the dried ripe seed of *Prunus persica* (L.) Batsch or *Prunus davidiana* (Carr.) Franch. (Fam. Rosaceae).
It contains not less than 4.0% of dilute ethanol-soluble extractives, not less than 8.0% of water extractives and not less than 2.0% of amygdalin.

Description:

1. Seed of *Prunus persica*: Flattened-elliptical, apex acute, middle swollen, base obtuse-rounded and slightly oblique, 1.2~1.8 cm in length, 0.8~1.2 cm in width, 2~4 mm thick. Externally yellowish-brown or reddish-brown, with numerous granular protuberances. A linear hilum occurring at the acute end, chalaza at the other end, with numerous brown longitudinal vascular bundles radiated from the chalaza, testa scattered with longitudinal vascular bundles. Testa thin, cotyledons 2, whitish, hypertrophy and oily. Odor, slight; taste, slightly bitter.
2. Seed of *Prunus davidiana*: Suboval, slightly flattened, relatively small but thicker, 0.9~1.5 cm in length, about 7 mm in width, about 5 mm thick. Testa reddish-brown or yellowish-red. Externally with granular protuberances, relatively rougher and denser. Odor, slight; taste, slightly bitter.

Microscopic identification:

1. **Transverse section:** Testa composed of several layers of parenchymatous cells, scattered with stone cells throughout. Vascular bundles pass through testa. Perisperm located underneath testa, composed of 1 row of shrunken cells. Endosperm composed of 1 to several rows of rectangular to square cells, containing aleurone grains and oil droplets. Cotyledons composed of polygonal parenchymatous cells, containing aleurone grains, crystals of calcium oxalate and oil droplets. Primary vascular bundles scattered among cotyledons. Crystals of calcium oxalate, rosette-aggregated, scattered along testa and cotyledons.
2. **Powder:**
   (1) Seed of *Prunus persica*: Yellowish-white. Stone cells pale yellow to brownish-yellow, conchoidal, helmet-shaped, bow-shaped or elliptic in lateral view, 49~218 μm in height, 32~208 μm in width at the base, with one side wall relatively thicker, about 8~40 μm thick, and densely striated; cell subrounded, rounded, polygonal or subsquare in surface view, with large and dense pits at the bottom wall. Testa cells orange-red, subrounded to polygonal. Endosperm cells contain oil droplets, walls slightly thickened. Cotyledon cells contain small crystals of calcium oxalate, aleurone grains and oil droplets.
   (2) Seed of *Prunus davidiana*: Yellowish-white. Stone cells conchoidal, oblong, elliptic or stripe-shaped in lateral view, 43~233 μm in height and 26~217 μm in width, with one side wall thicker, 9~35 μm thick, and densely striated; cell subrounded, subhexagonal, long-polygonal or subsquare in surface view, bottom walls unevenly thickened, with relatively small pits.

Thin layer chromatographic identification test (General rule 1010.3):

1. Sample solution: Add 1.0 g of powdered sample to 10 mL of methanol, heat under reflux for 10 minutes, cool, filter and use the filtrate.
2. Reference drug solution: Use 1.0 g of the reference drug as the same method described above.
3. Reference standard solution: Weigh accurately a quantity of amygdalin and dissolve in methanol to produce a solution containing 2.0 mg per mL.
4. Procedure: Use silica gel F_{254} as the coating substance and a solution of ethyl acetate, methanol and water (7:3:1) as the developing solvent. Apply 10 μL of each of the above solutions to the plate. Once the top of the solvent rise to about 5~10 cm from the origin, dry in air. Spray with a 10% solution of sulfuric acid in ethanol (H_2SO_4/EtOH TS), heat at 105℃ until the spots become visible. The spots in the chromatogram obtained from the sample solution correspond in R_f values and color to the spots in the chromatogram obtained from the reference drug solution and the reference standard solution.

Impurities and other requirements:

1. Loss on drying: Not more than 10.0% under heating at 105℃ for 5 hours (General rule 5008).
2. Total ash: Not more than 5.0% (General rule 5004).
3. Acid-insoluble ash: Not more than 2.0% (General rule 5004).

Assay:

1. Amygdalin:
   (1) Mobile phase: A solution of methanol, water and acetonitrile (20:75:5). The ratio varies as required.
   (2) Reference standard solution: Weigh accurately a quantity of amygdalin and dissolve in 70% methanol to produce a solution containing 80 μg per mL.
   (3) Sample solution: Weigh accurately 0.3 g of powdered sample, transfer to a conical flask with stopper, add 50 mL of petroleum ether (30~60℃), heat under reflux for 1 hour, cool, filter, discard the petroleum ether extract. Evaporate the residue and filter paper to dryness, transfer to an initial conical flask, add accurately 50 mL of 70% methanol, and weigh, heat under reflux for 1 hour, cool, weigh again, replenish the loss of weight with 70% methanol, mix well, filter. Transfer 5 mL of the successive filtrate to a 10-mL volumetric flask, add 50% methanol to volume, and mix well.
   (4) Chromatographic system: The liquid chromatography is equipped with an ultraviolet absorption photometer (wavelength: 210 nm) and a column packed with octadecylsilanized silica gel. The

number of theoretical plates of the peak of amygdalin should not be less than 3,000.

(5) Procedure: Inject accurately 10 μL of each of the reference standard solution and the sample solution into the liquid chromatography apparatus, and calculate the content.

2. Water extractives: Carry out the method for determination of water extractives (General rule 5006).
3. Dilute ethanol extractives: Carry out the method for determination of dilute ethanol-soluble extractives (General rule 5006).

Storage: Refrigerate or store in a cool and dry place, and protect from insects.
Usage: Blood-regulating medicinal (Blood-activating and stasis-dispelling medicinal).
Dosage: 4.5~9 g.

PEUCEDANI RADIX
前胡
Cian Hu / Qian Hu
Hogfennel Root

Hogfennel root is the dried root of *Peucedanum praeruptorum* Dunn or *Peucedanum decursivum* (Miq.) Maxim. (Fam. Umbelliferae).
It contains not less than 16.0% of dilute ethanol-soluble extractives and not less than 16.0% of water extractives.

Description:
1. Root of *Peucedanum praeruptorum*: Root stock and main root stout, cylindrical or conical, frequently curved or oblique, 2~4 cm in length, 1~1.5 cm in diameter, with scars of rootlets or 1~2 rootlets at the lower part, rootlets 3~5 cm in length. Externally brown, with densely annul striations and remains of leaf base at the root stock, commonly known as "Chiou Yin Tou (earthworm-like)", rootlets with irregular longitudinal furrows and transverse lenticels. Texture of main root, hard and fragile, fracture yellowish-white, bark broad, relatively loose, with numerous yellow oil dots (secretory cavities) in bark and wood. Cambium ring slightly square at the transverse section of root stock, with pith. Odor, aromatic; taste, slightly sweet, and then bitter and pungent.
2. Root of *Peucedanum decursivum*: Main root relatively longer, with rootlet, 7~15 cm in length. Bark often separates from wood, narrow, with oil dots, wood yellowish-white.

Microscopic identification:
1. **Transverse section:**
   (1) Root of *Peucedanum praeruptorum*: Cork composed of over 10 layers of cells. Cortex extremely narrow, with some oil cavities. Phloem relatively broad, outer cells frequently with clefts, numerous subrounded oil cavities scattered, with 5~11 secretory cells, containing pale yellow oil secretions; phloem rays mostly curved at the outside. Cambium in a ring. Xylem relatively small, primary rays relatively broad and distinct, divided xylem into two parts; vessels arranged radially; a few oil cavities scattered. Parenchymatous cells contain starch granules.
   (2) Root of *Peucedanum decursivum*: Cortex and phloem scattered with flat-rounded oil cavities, surrounded by indistinct secretory cells containing yellow oil secretions; phloem rays relatively straight.
2. **Powder:**
   (1) Root of *Peucedanum praeruptorum*: Pale yellow. Stone cells subsquare, subrectangular, ovate, subtriangular or long strip-shaped, 22~97 μm in diameter, 66~206 μm in length, wall 3~40 μm thick, striations mostly distinct, some lumen contains orange contents. Cork cells mostly over 10 layers, overlapped; cells extremely flat in lateral view, arranged in order, 3~13 μm in diameter, 25~216 μm in length, wall slightly lignified or lignified; rectangular, subtriangular or slender in surface view, wall slightly curved, fragments of cork tissue with edge mostly arranged in order. Fragments of oil cavities surrounded by cells with indistinct cell boundaries, some lumen filled with pale yellow secretions. Xylem fibers fusiform, 83~312 μm in length, 15~26 μm in diameter, wall 3~8 μm thick, pits sparse, fine and dotted, with pit canals faintly present, some lumen contains yellowish-brown contents. Simple starch granules subrounded, broadly ovoid or oblong, hilum dotted or cleft-shaped, with striations indistinct; compound granules composed of 2~4 components. Vessels also present.
   (2) Root of *Peucedanum decursivum*: Reddish-brown. Sclerenchymatous cells subsquare or rectangular, 25~78 μm in diameter, 51~128 μm in length, wall slightly thickened and lignified, pits oblique slit-shaped, relatively long. Fragments of oil cavities contain strip-shaped yellow secretions, 38~75 μm in diameter, surrounded by cells with indistinct cell boundaries. Xylem rays with cells subsquare or slightly irregular in shape, 23~51 μm in diameter, wall slightly thickened and lignified, with pit canals distinct, pits fine and dense, oblique slit-shaped, V-shaped or cruciate, longitudinal walls moniliform. Xylem fibers slender, 14~25 μm in diameter, pits relatively dense, simple or bordered, with pit canals

distinct. Cork cells, vessels and starch granules also present.

Thin layer chromatographic identification test (General rule 1010.3):

1. Sample solution: Add 1.0 g of powdered sample to 10 mL of methanol, ultrasonicate for 15 minutes, filter and use the filtrate.
2. Reference drug solution: Use 1.0 g of the reference drug as the same method described above.
3. Reference standard solution: Weigh accurately a quantity of praeruptorin A and praeruptorin B and dissolve in methanol to produce a solution containing 0.5 mg per mL of each.
4. Procedure: Use silica gel F_{254} as the coating substance and a solution of dichloromethane and acetone (10:0.5) as the developing solvent. Apply 5 μL of each of the above solutions to the plate. Once the top of the solvent rise to about 5~10 cm from the origin, dry in air. Examine under the ultraviolet light at 365 nm. The spots in the chromatogram obtained from the sample solution correspond in R_f values and color to the spots in the chromatogram obtained from the reference drug solution and the reference standard solution.

Impurities and other requirements:

1. Loss on drying: Not more than 15.0% under heating at 105℃ for 5 hours (General rule 5008).
2. Total ash: Not more than 8.0% (General rule 5004).
3. Acid-insoluble ash: Not more than 3.0% (General rule 5004).

Assay:

1. Water extractives: Carry out the method for determination of water extractives (General rule 5006).
2. Dilute ethanol extractives: Carry out the method for determination of dilute ethanol-soluble extractives (General rule 5006).

Storage: Refrigerate or store in a cool and dry place, and protect from mold and insects.
Usage: Phlegm-dispelling, cough-suppressing and panting-calming medicinal.
Dosage: 3~10 g.

PHARBITIDIS SEMEN
牽牛子
Cian Niou Zih / Qian Niu Zi
Pharbitis Seed

Pharbitis seed is the dried ripe seed of *Pharbitis nil* (L.) Choisy or *Pharbitis purpurea* (L.) Voigt (Fam. Convolvulaceae).
It contains not less than 12.0% of dilute ethanol-soluble extractives and not less than 18.0% of water extractives.

Description: Orange segment-shaped or ovate, with 3-ridged, 4~8 mm in length, 3~5 mm in width, both sides slightly flattened, dorsal side arcuate with a longitudinal furrow, ventral side with a rib, the lower end with a pointed and white hilum. Externally grayish-black (commonly known as "Hei Chou") or pale yellow (commonly known as "Bai Chou"). Testa hard and shrunken. In transverse section, pale yellowish-green, with 2 shrunken and folded cotyledons. Odor, slight; taste, slightly pungent and bitter.

Microscopic identification:

1. **Transverse section:** Epidermis composed of 1~2 rows of subsquare cells, some parts differentiated into unicellular non-glandular hairs, 30~250 μm in length. Inside the epidermis showing 2~3 rows of subsquare or elongated-elliptical palisade tissue, elongated radially, with a light line near outside. Nutritive layer composed of several rows of cells and yellowish-brown decadent cells, subsquare, elongated radially, with small vascular bundles. The outermost layer of endosperm was 1~2 rows of subsquare sclerenchymatous cells. Cotyledon composed of subrounded parenchymatous cells, containing starch granules, fatty oil and clusters of calcium oxalate, 5~30 μm in diameter.
2. **Powder:** Pale yellowish-brown. Epidermal cells of testa irregular in shape, anticlinal walls thin and undulating. Unicellular non-glandular hairs 30~250 μm in length, about 30 μm in diameter, wall slightly thickened. Palisade cells subsquare, with thickened and lignified walls, some lumens containing yellowish-brown contents, light line visible. Cotyledon cells subrounded, containing starch granules, fatty oil and clusters of calcium oxalate, prism crystals occasionally found. Secretory canals subrounded, containing oil droplets.

Thin layer chromatographic identification test (General rule 1010.3):

1. Sample solution: Add 1.0 g of powdered sample to 10 mL of ethanol, ultrasonicate for 30 minutes, cool, filter and make up the filtrate to 10 mL.
2. Reference drug solution: Use 1.0 g of the reference drug as the same method described above.
3. Procedure: Use silica gel F_{254} as the coating substance and a solution of *n*-hexane, toluene and acetone (3:2:1) as the developing solvent. Apply 5 μL of each of the above solutions to the plate. Once the top of the solvent rise to about 5~10 cm from the origin, dry in air. Examine under the ultraviolet light at 365 nm. The spots in the chromatogram obtained from the sample solution correspond in R_f values and color to the spots in the chromatogram obtained from the reference drug solution.

Impurities and other requirements:

1. Loss on drying: Not more than 12.0% under heating at 105℃ for 5 hours (General rule 5008).
2. Total ash: Not more than 6.0% (General rule 5004).
3. Acid-insoluble ash: Not more than 1.0% (General rule 5004).

Assay:

1. Water extractives: Carry out the method for determination of water extractives (General rule 5006).
2. Dilute ethanol extractives: Carry out the method for determination of dilute ethanol-soluble extractives (General rule 5006).

Storage: Store in a cool and dry place, and protect from moisture.
Usage: Water-expelling medicinal.
Dosage: 3~6 g.
Precaution and warning: Forbidden during pregnancy.

PHELLODENDRI CORTEX
黃蘗
Huang Bo / Huang Bo
Phellodendron Bark

Phellodendron bark is the dried bark of trunk of *Phellodendron chinense* Schneid. or *Phellodendron amurense* Rupr. (Fam. Rutaceae). The former is commonly known as "Chuan Huang Bo", and the latter is commonly known as "Guan Huang Bo".
It contains not less than 14.0% of dilute ethanol-soluble extractives, not less than 6.0% of water extractives and not less than 1.2% of berberine, calculated with berberine chloride.

Description:

1. Bark of *Phellodendron chinense*: Tabular or shallowly channelled, varying in length and width, 3~7 mm thick. Outer surface yellowish-brown, relatively even, with transverse lenticels distinct on young bark and irregular longitudinally fissures, occasionally remained with grayish-brown cork cortex. Inner surface dark yellow or yellowish-brown, with fine longitudinally ribs. Texture light and relatively hard, fracture dark yellow, laminated and fibrous. Odor, slight; taste, bitter, viscous and saliva dyed yellow on chewing.
2. Bark of *Phellodendron amurense*: Usually thinner than bark of *Phellodendron chinense*, about 2~4 mm thick. Outer surface dark yellowish-brown, with irregular longitudinal fissures, occasionally remained with dark gray and thick cork cortex, tenacious, lenticels small and infrequently visible. Inner surface yellowish-green or yellowish-brown. Texture light and hard, fracture bright yellow or yellowish-green.

Microscopic identification:

1. **Transverse section:**
   (1) Bark of *Phellodendron chinense*: The outer part of bark incompletely removed, cork composed of several layers of rectangular cells, containing brown contents. Phelloderm cells contain prisms of calcium oxalate. Cortex relatively narrow, scattered with fiber bundles and stone cell groups, stone cells mostly branched, wall extremely thickened, striations distinct. Phloem occupied the most part of the bark, a few of stone cells presented at the outer part, fiber bundles arranged tangentially in an interrupted layer (hard phloem), surrounded by parenchymatous cells containing prisms of calcium oxalate. Rays 2~4 rows of cells wide, usually curved and slender. Parenchymatous cells contain fine starch granules and prisms of calcium oxalate, mucilage cells scattered.
   (2) Bark of *Phellodendron amurense*: Cork cells square, cortex relatively broad, stone cells less than *Phellodendron chinense*, stone cells rare at the outer part of phloem. Rays relatively straight, hard phloem less developed. The other characters similar to bark of *Phellodendron chinense*.
2. **Powder:**
   (1) Bark of *Phellodendron chinense*: Yellow or yellowish-brown. Stone cells mostly branched, round ones 40~128 μm in diameter, pit canals visible. Yellow mucilage cells mostly singly scattered, gradually swollen when moistened with water, becoming subrounded or oblong, 40~72 μm in diameter, wall thin, occasionally split, lumen contains irregular mucilage contents.
   (2) Bark of *Phellodendron amurense*: Greenish-yellow or yellow. Stone cells abundant, light yellow, oblong, fusiform, long strip-shaped or irregular branch-shaped, 35~80 μm in length, some branched, the end obtusely acute, wall thickened, with distinct striations. Fibers light yellow, 16~38 μm in diameter, usually in bundles, surrounded by cells containing prisms of calcium oxalate, forming crystal fibers. Prisms of calcium oxalate extremely numerous, 12~30 μm in diameter. Starch granules spheroidal, not over 10 μm in diameter. Mucilage cells visible, subspheroidal, 32~42 μm in diameter.

Thin layer chromatographic identification test (General rule 1010.3):

1. Sample solution: Add 1.0 g of powdered sample to 15 mL of methanol, ultrasonicate for 30 minutes, filter and use the filtrate.
2. Reference drug solution: Use 1.0 g of the reference drug as the same method described above.

3. Reference standard solution: Weigh accurately a quantity of berberine chloride and dissolve in methanol to produce a solution containing 1.0 mg per mL.
4. Procedure: Use silica gel F_{254} as the coating substance and a solution of *n*-butanol, water and glacial acetic acid (7:2:1) as the developing solvent. Apply 5 μL of each of the above solutions to the plate. Once the top of the solvent rise to about 5~10 cm from the origin, dry in air. The spots in the chromatogram obtained from the sample solution correspond in R_f values and color to the spots in the chromatogram obtained from the reference drug solution and the reference standard solution.

Impurities and other requirements:
1. Loss on drying: Not more than 14.0% under heating at 105℃ for 5 hours (General rule 5008).
2. Total ash: Not more than 8.0% (General rule 5004).
3. Acid-insoluble ash: Not more than 2.0% (General rule 5004).

Assay:
1. Berberine chloride:
   (1) Mobile phase: Add 3.4 g potassium dihydrogen phosphate and 1.7 g sodium lauryl sulfate in a 1,000 mL solution of water and acetonitrile (1:1). The ratio varies as required.
   (2) Reference standard solution: Weigh accurately a quantity of berberine chloride and dissolve in methanol to produce a solution containing 0.1 mg per mL.
   (3) Sample solution: Weigh accurately 0.5 g of the powdered sample, accurately add 30 mL of the solution of methanol and dilute hydrochloric acid (100:1), heat under reflux for 30 minutes, cool, filter. The residue add sequentially with 30 mL and 20 mL of methanol and dilute hydrochloric acid (100:1) as the same method described above. The finally residue add 10 mL of methanol, shake. Combine all filtrates, make up to 100 mL with methanol, and mix well.
   (4) Chromatographic system: The liquid chromatography is equipped with an ultraviolet absorption photometer (wavelength: 345 nm) and a column (4~6 mm × 15~25 cm) packed with octadecylsilanized silica gel (5~10 μm in particle diameter). The column temperature is maintained at 40℃. The retention time of berberine chloride is about 10 minute. Inject reference standard solution into the liquid chromatography apparatus for five times, and record the peak areas. The relative standard deviation of the peak area of berberine chloride should not be more than 1.5%.
   (5) Procedure: Inject accurately 20 μL of each of the reference standard solution and the sample solution into the liquid chromatography apparatus, and calculate the content.
2. Water extractives: Carry out the method for determination of water extractives (General rule 5006).
3. Dilute ethanol extractives: Carry out the method for determination of dilute ethanol-soluble extractives (General rule 5006).

Storage: Store in a ventilated and dry place, and protect from insects.
Usage: Heat-clearing medicinal (Heat-clearing and dampness-drying medicinal).
Dosage: 3~10 g.

PHERETIMA
地龍
Di Long / Di Long
Earthworm

Earthworm is the dried body of *Pheretima aspergillum* E. Perrier, *Pheretima vulgaris* Chen, *Pheretima guillelmi* Michaelsen or *Pheretima pectinifera* Michaelsen (Fam. Megascolecidae). The former one is commonly known as "Guang Di Long", the latter three are commonly known as "Hu Di Long".
It contains not less than 9.0% of dilute ethanol-soluble extractives and not less than 8.0% of water extractives.

Description:
1. Guang Di Long: Slat-shaped thin slices, curved, margin slightly rolled, 15~20 cm in length, 1~2 cm in width, with segments throughout the body. The outer surface brown to purplish-gray on the dorsal part, pale yellowish-brown on the abdomen part; the clitellum at the segment 14~16, relatively bright, commonly known as "Bai Jing" (white neck). Tapered at the anterior part, blunt and rounded at the caudal end. The setae coarse and stiff, slightly light in color. Male opening on a small protuberance of setae ring at the ventral side of segment 18, outer margin with several rings of shallow skin fold, inner setae ring protuberant, 1 or 2 ranks of small papillae on both sides of the anterior part, number varies from 10~20 on each side. Two pairs of seminal receptacle opening located on an elliptical protuberance between segments 7/8~8/9, occupying about 5/11 girth of the segment. Texture light and slightly coriaceous, uneasily broken. Odor, stinking; taste, slightly salty.
2. Hu Di Long: 8~15 cm in length, 0.5~1.5 cm in width, the whole body composed of segments, dorsal part brown to yellowish-brown, ventral part pale yellowish-brown; 3 pairs of seminal receptacle openings located between 6/7~8/9

segment. The clitellum at the segment 14~16, relatively bright. A pair of male opening on segment 18. The male copulatory pouch of *Pheretima vulgaris* can turn out completely, as the shape of cauliflower or penis; of *Pheretima guillelmi* longitudinally slit-like; the male openings of *Pheretima pectinifera* with 1 or more papillae at the inner side.

Microscopic identification:

1. **Powder:**
   (1) Guang Di Long: Pale grayish-yellow or pale gray. Obliquely striated muscle fibers mainly colorless, very few pale brown, muscle fibers easily scattered or twisted with each other, mostly curved, 4~66 μm in diameter, margin usually uneven, some margin partly inflated, light and dark striations indistinct, arranged alternately. Epidermal cells yellowish-green or yellowish-brown, cell boundary indistinct, containing blackish-brown pigment granules, scattered or gathered into strip or reticulate. Setae rarely present, usually broken and scattered, pale brown or yellowish-brown, 34~63 μm in diameter at the center, apex mostly blunt, some with longitudinal striations on the surface.

Thin layer chromatographic identification test (General rule 1010.3):

1. Sample solution: Add 1.0 g of powdered sample to 10 mL of water, heat to boil, cool and centrifuge and use the supernatant.
2. Reference drug solution: Use 1.0 g of the reference drug as the same method described above.
3. Reference standard solution: Weigh accurately a quantity of lysine, leucine and valine and dissolve in water to produce a solution containing 1 mg, 1 mg and 0.5 mg per mL of each.
4. Procedure: Use silica gel F_{254} as the coating substance and a solution of *n*-butanol, glacial acetic acid and water (4:1:1) as the developing solvent. Apply 3 μL of each of the above solutions to the plate. Once the top of the solvent rise to about 5~10 cm from the origin, dry in air. Spray with a solution of ninhydrin (Ninhydrin TS), heat at 105℃ until the spots become visible. The spots in the chromatogram obtained from the sample solution correspond in R_f values and color to the spots in the chromatogram obtained from the reference drug solution and reference standard solution.

Impurities and other requirements:

1. Loss on drying: Not more than 12.0% under heating at 105℃ for 5 hours (General rule 5008).
2. Total ash: Not more than 20.0% (General rule 5004).
3. Acid-insoluble ash: Not more than 10.0% (General rule 5004).
4. Total heavy metals: Not more than 30.0 ppm (General rule 3005).

Assay:

1. Water extractives: Carry out the method for determination of water extractives (General rule 5006).
2. Dilute ethanol extractives: Carry out the method for determination of dilute ethanol-soluble extractives (General rule 5006).

Storage: Refrigerate or store in a cool and dry place, and protect from mold and insects.
Usage: Liver-pacifying and wind-extinguishing medicinal.
Dosage: 3~10 g.

PHOTINIAE FOLIUM
石南葉
Shih Nan Ye / Shi Nan Ye
Chinese Photinia Leaf

Chinese photinia leaf is the dried leaf of *Photinia serrulata* Lindl. (Fam. Rosaceae).

Description: Oblong, 6~13 cm in length, 2~5 cm in width, petioles about 3 cm in length, with fine sharp serrated at the edge. Upper surface reddish-brown or darkish-brown, lower slightly lighter, the main veins protruding obviously, lateral veins arranged like plumes, both sides smooth and hairless, thick, coriaceous and fragile. Odorless; taste bitter and astringent.

Microscopic identification:

1. **Transverse section:** Epidermis rectangular, covered with thickened cuticle, palisade tissue composed of 2~3 layers densely arranged cells; spongy tissue with large intercellular spaces; main vein protuberant downwards, vascular bundles U-shaped, xylem well developed, phloem narrow, scattered with numerous fiber bundles at the outer side of vascular bundles. Collenchymatous cells, parenchymatous cells and phloem of main vein and mesophyllous cells contain clusters and prisms of calcium oxalate.
2. **Powder:** Yellowish-green. Upper and lower epidermal cells polygonal, arranged densely, occasionally relatively thickened cuticle in lateral view. Stomata anomocytic, with 4~7 subsidiary cells, mostly present in lower epidermis; crystal fibers many; prisms of calcium oxalate 5~16 μm in diameter, clusters of calcium oxalate 8~16 μm in diameter.

Identification:

1. Check hydrocyanic acid: Take 1.0 of powdered samples, add 1 mL of 1% hydrochloric acid in a test tube, place in a water bath, hang a sodium picrate paper on the tube at the same time, stopper

tightly, the paper gradually turns from yellow to brick red with heating time increases.

Storage: Store in a ventilated and dry place.
Usage: Wind-dampness-dispelling medicinal.
Dosage: 4.5~9 g.

PHRAGMITIS RHIZOMA
蘆根
Lu Gen / Lu Gen
Reed Rhizome

Reed rhizome is the dried rhizome of *Phragmites communis* Trinus (Fam. Gramineae).
It contains not less than 9.0% of dilute ethanol-soluble extractives and not less than 9.0% of water extractives.

Description: Cylindrical, some slightly flattened, varying in length; thick one cut into small pieces, 3~5 cm in length, 1~2 cm in diameter. Externally yellowish-white, with longitudinal wrinkles and furrows, nodes distinct, annular, bearing remains of buds and stem scars. Texture tenacious, uneasily broken, fracture whitish, hollowed, 1~2 mm thick, showing small pores arranged in a ring in the margin (aerenchyma). Odor, slight; taste, slightly bitter.

Microscopic identification:
1. **Transverse section:** Epidermis composed of 1 layer of slightly flatten cells, outer walls thickened and slightly lignified, covered with orange-yellow cuticles. Hypodermal fibers 3~4 layers, subpolygonal, wall slightly thickened and lignified. Cortex relatively broad, with numerous subsquare large air cavities, arranged in a ring; endodermis indistinct. Vascular bundles of stele 3~4 arranged in a ring, the outermost row with relatively small vascular bundles, arranged among air cavities, between the outer and inner rows of vascular bundles scattered with fiber bundles arranging in a ring; vascular bundles in closed collateral type, surrounded by fibers of vascular bundle sheath, protoxylem vessels small, deutoxylem composed of 2 large vessels, phloem cells relatively small. Pith large in the center, hollowed.

Thin layer chromatographic identification test (General rule 1010.3):
1. Sample solution: Add 1.0 g of powdered sample to 15 mL of methanol, ultrasonicate for 30 minutes, filter and use the filtrate.
2. Reference drug solution: Use 1.0 g of the reference drug as the same method described above.
3. Procedure: Use silica gel F_{254} as the coating substance and a solution of *n*-butanol, glacial acetic acid and water (7:1:2) as the developing solvent. Apply 10 μL of each of the above solutions to the plate. Once the top of the solvent rise to about 5~10 cm from the origin, dry in air. Spray with a solution of *p*-anisaldehyde in sulfuric acid (*p*-Anisaldehyde/H_2SO_4 TS), heat at 105℃ for 2 minutes. Examine under the visible light. The spots in the chromatogram obtained from the sample solution correspond in R_f values and color to the spots in the chromatogram obtained from the reference drug solution.

Impurities and other requirements:
1. Total ash: Not more than 12.0% (General rule 5004).
2. Acid-insoluble ash: Not more than 6.0% (General rule 5004).

Assay:
1. Water extractives: Carry out the method for determination of water extractives (General rule 5006).
2. Dilute ethanol extractives: Carry out the method for determination of dilute ethanol-soluble extractives (General rule 5006).

Storage: Store in a ventilated and dry place, and protect from mold and insects.
Usage: Heat-clearing medicinal (Heat-clearing and fire-purging medicinal).
Dosage: 15~30 g.

PINELLIAE RHIZOMA
半夏
Ban Sia / Ban Xia
Pinellia Tuber

Pinellia tuber is the dried tuber of *Pinellia ternata* (Thunb.) Breit. (Fam. Araceae).
It contains not less than 3.5% of dilute ethanol-soluble extractives and not less than 9.0% of water extractives.

Description: Spheroidal, hemispheric or oblique, 0.8~2 cm in diameter, with externally yellow spots. Apex flattened and rounded at the top, with pocked and yellowish-brown scars of leaves or buds, surrounded densely by pocked and dotted scars of fibrous root, base obtuse and rounded, relatively smooth. Texture hard and starchy, fracture white or pale yellow, fracture reniform, whitish, starchy, decrepit or dried improperly pinellia tuber with grayish-white or yellow lines. Odor, with a strong irritant leading to sneezing; taste, pungent, viscous and numb on chewing.

Microscopic identification:
1. **Transverse section:** The cork as the outermost layer (only some part of cork remained on unprocessed banxia of market medicinal material), composed of 8~11 layers of cells, arranged tangential densely, cell subsquare, rectangular or long-flat shaped, 2~6 μm in width, 10~50 μm in length, lignified; the inner part parenchymatous cells present, subrounded, ovate, oblong, polygonal

or irregular shaped, filled with starch granules, subrounded to ovate, polygonal or irregular shaped, some starch granules linear or burst-like shaped, hilum or stellated; large starch granules with distinct striations, usually in individual or compound granules, composed of 2~8 components, 2~30 μm in diameter. Cortex scattered with mucilage cells, containing raphides of calcium oxalate, 1~2 μm in diameter, 20~50 μm in length; when slicing, raphides bundles usually scattered onto adjacent parenchymatous cells. Vascular bundles as in 3 types of collateral, radial or amphivasal. Vessels thick-walled, 4~60 μm in diameter, mainly in spiral, rare in annular, lignified distinct or indistinct with striations distinct.

2. **Powder:** White. Extremely numerous starch granules present as the majority proportion of the powder, subrounded, oblong, polygonal or irregular, occasionally linear or burst-like shaped; hilum stellate, larger starch granules with distinct striations, usually in individual or compound, granules composed of 2~8 components, 2~30 μm in diameter. Raphides of calcium oxalate numerous, as singly scattered, several in bundles or remained in mucilage cells; raphides extremely fine, some fracture-shaped, 1~2 μm in diameter, 2~50 μm in length. Vessels mainly in spiral, rare in annular vessels, 4~60 μm in diameter, lignified distinct or indistinct.

Thin layer chromatographic identification test (General rule 1010.3):

1. Sample solution: Add 1.0 g of powdered sample to 10 mL of methanol, ultrasonicate for 30 minutes, filter, evaporate to 3 mL and use the filtrate.
2. Reference drug solution: Use 1.0 g of the reference drug as the same method described above.
3. Procedure: Use silica gel F_{254} as the coating substance and a solution of petroleum ether (30~60 ℃), ethyl acetate, acetone and formic acid (30:6:4:0.5) as the developing solvent. Apply 5 μL of each of the above solutions to the plate. Once the top of the solvent rise to about 5~10 cm from the origin, dry in air. Spray with a 10% solution of sulfuric acid in ethanol (H_2SO_4/EtOH TS) and heat at 105℃ until the spots become visible. The spots in the chromatogram obtained from the sample solution correspond in R_f values and color to the spots in the chromatogram obtained from the reference drug solution.

Impurities and other requirements:

1. Loss on drying: Not more than 14.0% under heating at 105℃ for 5 hours (General rule 5008).
2. Total ash: Not more than 5.0% (General rule 5004).
3. Acid-insoluble ash: Not more than 3.0% (General rule 5004).
4. Total heavy metals: Not more than 10.0 ppm (General rule 3005).
5. Arsenic (As): Not more than 5.0 ppm (General rule 3006, 3049, 3050).

Assay:

1. Water extractives: Carry out the method for determination of water extractives (General rule 5006).
2. Dilute ethanol extractives: Carry out the method for determination of dilute ethanol-soluble extractives (General rule 5006).

Storage: Refrigerate or store in a cool and dry place, and protect from insects.
Usage: Phlegm-dispelling medicinal (Cold-phlegm warming and resolving medicinal).
Dosage: 3~10 g.
Precaution and warning: Unprocessed one highly toxic, processed before application.

PIPERIS FRUCTUS
胡椒
Hu Jiao / Hu Jiao
Pepper

Pepper is the dried and almost ripe or ripe fruit of *Piper nigrum* L. (Fam. Piperaceae). The former is commonly known as "Black Pepper", and the latter is commonly known as "White Pepper".
Black pepper contains not less than 10.0% of dilute ethanol-soluble extractives and not less than 6.0% of water extractives; white pepper contains not less than 7.0% of dilute ethanol-soluble extractives and not less than 1.0% of water extractives.

Description:

1. Black Pepper (almost ripe fruit): Spheroidal, 0.3~0.6 cm in diameter. Externally blackish-brown, with reticulated wrinkles, apex remained with a fine protuberant stylopodium, base with a scar of fruit axis. Texture of exocarp and sarcocarp loose and fragile, easily exfoliated. Texture of endocarp relatively hard, fracture yellowish-white, starchy, center hollow, apex with a tiny embryo. Odor, aromatic; taste, pungent.
2. White Pepper (ripe fruit): Exocarp removed, spheroidal or long-spheroidal, 0.3~0.5 cm in diameter. Externally grayish-white, smooth, apex slightly dented and flattened, base slightly acute, occasionally with blackish-brown striations, with numerous light linear striations around. The character of endocarp and seed the same as the black pepper.

Microscopic identification:

1. **Transverse section:**
   (1) Black Pepper (almost ripe fruit): Exocarp composed of over 10 rows of epidermal cells and 2~3 rows of hypodermal cells; epidermal cells subrectangular or subpolygonal, with

outer walls wary, arranged tangentially, containing dark brown to sub-black contents; hypodermal cells suboblong, containing yellowish-brown contents and stone cell groups, with distinct lumina and pit canals, some containing brown contents. Mesocarp composed of 10~20 rows of parenchymatous cells, large oil cells and fine vascular bundles scattered, parenchymatous cells relatively small at the inner side, elongated tangentially, with walls slightly lignified, the innermost row of lignified parenchymatous cells accompanied by oil cells, arranged in an interrupted ring. Endocarp composed of 1 row of subrectangular stone cells, with thin outer wall and thick inner wall. 2~3 flattened-rectangular cells existed at outer testa, containing brown contents; membrane transparent cell layer existed at inner testa. Perisperm composed of broad parenchymatous tissue, 1~2 layers of aleurone grains existed at the outer side, containing starch granules; starch parenchymatous cells existed at the inner side, containing starch granules, scattered with oil cells. Endosperm composed of parenchymatous cells.

2. **Powder:**
   (1) Black Pepper (almost ripe fruit): Grayish-black. Stone cells of pericarp subrounded or rectangular, 15~80 μm in diameter, with distinct lumina and pit canals, some containing brown contents. Parenchymatous cells of mesocarp rectangular or polygonal, containing yellowish-brown contents and starch granules. Sclerenchymatous cells with one end blunt, 8~16 μm in diameter. Stone cells of endocarp subrectangular, 30~50 μm in length and 30~35 μm in width, with thin outer wall and thick inner wall. Vessels spiral, 10~20 μm in diameter. Starch granules subrounded, 2~6 μm in diameter.

Thin layer chromatographic identification test (General rule 1010.3):

1. Sample solution: Add 1.0 g of powdered sample to 10 mL of methanol, ultrasonicate for 30 minutes, cool, filter and use the filtrate.
2. Reference drug solution: Use 1.0 g of the reference drug as the same method described above.
3. Reference standard solution: Weigh accurately a quantity of piperine in an amber volumetric flask, and dissolve in absolute ethanol to produce a solution containing 4.0 mg per mL.
4. Procedure: Use silica gel F_{254} as the coating substance and a solution of toluene, ethyl acetate and acetone (7:2:1) as the developing solvent. Apply 2 μL of each of the above solutions to the plate. Once the top of the solvent rise to about 5~10 cm from the origin, dry in air. Spray with a 10% solution of sulfuric acid in ethanol (H_2SO_4/EtOH TS), heat until the spots become visible, examine under visible light. The spots in the chromatogram obtained from the sample solution correspond in R_f values and color to the spots in the chromatogram obtained from the reference drug solution and the reference standard solution.

Impurities and other requirements:

1. Loss on drying: Not more than 14.0% for white pepper under heating at 105℃ for 5 hours (General rule 5008).
2. Total ash: Not more than 7.0% for black pepper; not more than 3.0% for white pepper (General rule 5004).
3. Acid-insoluble ash: Not more than 2.0% for black pepper; not more than 1.0% for white pepper (General rule 5004).
4. Aflatoxins: Not more than 15.0 ppb (General rule 3053).

Assay:

1. Water extractives: Carry out the method for determination of water extractives (General rule 5006).
2. Dilute ethanol extractives: Carry out the method for determination of dilute ethanol-soluble extractives (General rule 5006).

Storage: Store in a cool and dry place or preserve in a well-closed container.
Usage: Middle-warming and cold-dispelling medicinal.
Dosage: 0.6~1.5 g.
Precaution and warning: It is used in powder for oral administration and an appropriate amount for external use.

PLANTAGINIS HERBA
車前草
Che Cian Cao / Che Qian Cao
Plantago Herb

Plantago herb is the dried herb of *Plantago asiatica* L. or *Plantago depressa* Willd. (Fam. Plantaginaceae).
It contains not less than 4.0% of dilute ethanol-soluble extractives and not less than 10.0% of water extractives.

Description:

1. Herb of *Plantago asiatica*: 10~18 cm in height. Roots tiny, fibrous. Leaves crumpled, grayish-green, broadly ovate or elliptical as whole, 5~12 cm in length, 2~8 cm in width, with 5~7 longitudinal veins, petioles slender and long. Spikes several, terminal. Capsules circumscissile, calyx persistent at the apex of scape. Odor, slight; taste, slightly bitter, viscous.

2. Herb of *Plantago depressa*: Main roots conical, straight and long. Leaves oblong or lanceolate, 5~10 cm in length, 1~3 cm in width, narrow, with 5~7-nerved at the base. Spikes terminal, dense at the upper, loose at the lower.

Microscopic identification:

1. **Transverse section:**
   (1) Leaf of *Plantago asiatica*: Upper epidermis composed of 1 row of cells, subrounded or subsquare, 25 μm in diameter, with cuticle striations, anticlinal walls undulate. Palisade tissue composed of 1~2 rows of rectangular cells, arranged densely. Spongy tissue with cells subrounded. Vascular bundles collateral; xylem vessels spiral, 5~20 μm in diameter. Lower epidermis composed of 1 row of cells, cells relatively small, stomata anomocytic. Glandular hairs with 2 cells in the head, elliptical, with a unicellular stalk, 10~30 μm in diameter, containing yellowish-brown secretions. Non-glandular hairs rare, 2~10 cells, walls slightly thickened and with faint warty.
   (2) Leaf of *Plantago depressa*: Non-glandular hairs composed of 5~20 cells, 350~900 μm in length, walls filled with faint warty.
2. **Powder:**
   (1) Herb of *Plantago asiatica*: Grayish-green. Epidermal cells of leaf subpolygonal in surface view, anticlinal walls undulate, with stomata. The upper epidermal cells with cuticle striations. Vessels spiral, 5~20 μm in diameter. Fibers slender, with walls slightly thickened and lignified, containing oblique pits. Glandular hairs with 2 cells in the subrounded head, 10~30 μm in diameter, 15~50 μm in length, with a unicellular stalk, containing yellowish-brown secretions. Non-glandular hairs composed of 2~10 cells, about 18 μm in diameter, walls with faint warty. Pollen grains pale yellow or colorless, subrounded, 20~25 μm in diameter, with warty sculptures on the surface. Stomata anomocytic, with 3~5 subsidiary cells, 15~35 μm in length, 15~30 μm in diameter.
   (2) Herb of *Plantago depressa*: Brownish-green. The head of glandular hairs 18~27 μm in diameter, 15~40 μm in length; the head and stalk all containing pale brown secretions. Non-glandular hairs composed of 5~20 cells, 10~25 μm in diameter, walls slightly thickened, with relatively large and dense warty.

Thin layer chromatographic identification test (General rule 1010.3):

1. Sample solution: Add 1.0 g of powdered sample to 10 mL of methanol, ultrasonicate for 30 minutes, filter and use the filtrate.
2. Reference drug solution: Use 1.0 g of the reference drug as the same method described above.
3. Reference standard solution: Weigh accurately a quantity of plantamajoside and dissolve in methanol to produce a solution containing 1.0 mg per mL.
4. Procedure: Use silica gel F_{254} as the coating substance and a solution of ethyl acetate, methanol, formic acid and water (18:3:1.5:1) as the developing solvent. Apply 5 μL of each of the above solutions to the plate. Once the top of the solvent rise to about 5~10 cm from the origin, dry in air. Examine under the ultraviolet light at 365 nm. The spots in the chromatogram obtained from the sample solution correspond in R_f values and color to the spots in the chromatogram obtained from the reference drug solution and the reference standard solution.

Impurities and other requirements:

1. Loss on drying: Not more than 14.0% under heating at 105℃ for 5 hours (General rule 5008).
2. Total ash: Not more than 15.0% (General rule 5004).
3. Acid-insoluble ash: Not more than 5.0% (General rule 5004).

Assay:

1. Water extractives: Carry out the method for determination of water extractives (General rule 5006).
2. Dilute ethanol extractives: Carry out the method for determination of dilute ethanol-soluble extractives (General rule 5006).

Storage: Store in a cool and dry place, and protect from moisture.
Usage: Dampness-dispelling medicinal.
Dosage: 9~30 g.

PLANTAGINIS SEMEN
車前子
Che Cian Zih / Che Cian Zi
Plantago Seed

Plantago seed is the dried ripe seed of *Plantago asiatica* L. or *Plantago depressa* Willd. (Fam. Plantaginaceae).
It contains not less than 6.0% of dilute ethanol-soluble extractives, not less than 6.0% of water extractives, not less than 4.0% (v/w) of swelling capacity and not less than 0.40% of verbascoside.

Description:

1. Seed of *Plantago asiatica*: Ellipsoid or irregularly oblong, slightly flattened, 1.10~2.10 mm in length, 0.60~1.20 mm in width, relatively large. Externally brown or darkish-brown, with a pale yellow concave pointed hilum on one side. Fracture

grayish-white. Odor, slight; taste, weak, viscous on chewing.

2. Seed of *Plantago depressa*: Flattened oblong, 0.85~1.75 mm in length, 0.65~0.90 mm in width, relatively small. Externally brownish-red or brown, with a white concave pointed hilum in the center.

Microscopic identification:

1. **Transverse section:** Testa composed of 2 layers of cells; outer layer is mucilaginous layer, walls extremely thin, melted and swelled when moistened with water; inner layer is pigmented, polygonal or subsquare, the cells contain brown pigments. Endosperm composed of 3~5 rows of cells, suboval or subrounded, containing fatty oil. Cotyledon cells arranged in order, subrounded, containing aleurone grains and fatty oil. The differences between *Plantago asiatica* and *Plantago depressa* is *Plantago depressa* with small pigment cells, outer walls flat and subrectangular.
2. **Powder:**
   (1) Seed of *Plantago asiatica*: Dark yellowish-brown. Outer epidermal cells of testa subsquare or subrectangular in sectional view, walls thin; subrectangular in surface view, 25~75 μm in length, 3~18 μm in diameter. Inner epidermal cells of testa yellowish-brown, subrectangular, 28~85 μm in length, 7~29 μm in diameter, walls thin and slightly curved. Endosperm cells with walls thickened, polygonal or subrounded, lumen filled with aleurone grains and fatty oil. Cotyledon cells subrounded or suboval, containing aleurone grains and oil droplets.
   (2) Seed of *Plantago depressa*: Dark yellowish-brown. Inner epidermal cells of testa relatively small, 11~45 μm in length, 5~15 μm in diameter.

Thin layer chromatographic identification test (General rule 1010.3):

1. Sample solution: Add 2.0 g of powdered sample to 10 mL of ethanol, heat and reflux for 30 minutes, cool, filter and make up the filtrate to 10 mL.
2. Reference drug solution: Use 2.0 g of the reference drug as the same method described above.
3. Procedure: Use silica gel F_{254} as the coating substance and a solution of *n*-butanol, water and glacial acetic acid (7:2:1) as the developing solvent. Apply 5 μL of each of the above solutions to the plate. Once the top of the solvent rise to about 5~10 cm from the origin, dry in air. Spray with a solution of 2,4-dinitrophenylhydrazine (2,4-Dinitrophenylhydrazine TS) and heat at 105℃ for 2 minutes until the spots become visible. Examine under visible light. The spots in the chromatogram obtained from the sample solution correspond in R_f values and color to the spots in the chromatogram obtained from the reference drug solution.

Impurities and other requirements:

1. Loss on drying: Not more than 12.0% under heating at 105℃ for 5 hours (General rule 5008).
2. Total ash: Not more than 6.0% (General rule 5004).
3. Acid-insoluble ash: Not more than 3.0% (General rule 5004).
4. Swelling capacity: Weigh accurately 1.0 g of powdered sample, carry out the method for determination of swelling capacity (General rule 5009).

Assay:

1. Verbascoside:
   (1) Mobile phase: A solution of methanol as the mobile phase A, and a solution of 0.5% acetic acid as the mobile phase B.
   (2) Reference standard solution: Weigh accurately a quantity of verbascoside, transfer to an amber volumetric flask, and dissolve in 60% methanol to produce a solution containing 0.1 mg per mL.
   (3) Sample solution: Weigh accurately 1.0 g of powdered sample, in a conical flask with stopper, add 50 mL of 60% methanol, weigh, heat under reflux for 2 hours, cool, weigh again, replenish the loss of weight with 60% methanol, mix well and filter, use the successive filtrate.
   (4) Chromatographic system: The liquid chromatography is equipped with an ultraviolet absorption photometer (wavelength: 254 nm) and a column packed with octadecylsilanized silica gel.

Time (min)	Mobile phase A (%)	Mobile phase B (%)
0~1	5	95
1~40	5→60	95→40
40~50	5	95

   (5) Procedure: Inject accurately 10 μL of each of the reference standard solution and the sample solution into the liquid chromatography apparatus, and calculate the content.
2. Water extractives: Carry out the method for determination of water extractives (General rule 5006).
3. Dilute ethanol extractives: Carry out the method for determination of dilute ethanol-soluble extractives (General rule 5006).

Storage: Store in a cool and dry place, and protect from moisture.
Usage: Dampness-draining diuretic medicinal.
Dosage: 10~15 g.

PLATYCLADI RAMULUS ET FOLIUM
側柏葉
Ce Bo Ye / Ce Bo Ye
Chinese Arborvitae Twig and Leaf

Chinese arborvitae twig and leaf is the dried twig and leaf of *Platycladus orientalis* (L.) Franco (Fam. Cupressaceae).
It contains not less than 15.0% of dilute ethanol-soluble extractives and not less than 11.0% of water extractives.

Description: Twigs flattened, vary in length. Leaves small, scale-shaped, decussate, close to twigs, externally dark green or yellowish-green, facial leaves rhomboid, and glandular groove at center abaxially. Texture fragile, easily broken.

Microscopic identification:

1. **Transverse section:**
   (1) Twig: Epidermis composed of 1 row of subsquare cells, wall thick, covered with cuticle scattered with sandy crystals and prisms of calcium oxalate, stomata sunken. Hypodermal fibers 1~2 layers, located underneath the epidermis, arranged discontinuously, with thickened wall, slightly lignified to lignified. Cortex composed of large parenchymatous cells, cells vary in size, containing resin canals. Vascular bundles arranged in a ring, phloem scattered with fibers, small pith located in the center, rays distinct.
   (2) Leaf: Palisade tissue composed of 1 row of short-cylindrical cells; spongy tissue composed of subrounded cells. Leaf vein vascular bundles collateral, outside accompanied by a subrounded large resin canal.
2. **Powder:** Pale green. Stomata extremely numerous, sunken, with large subsidiary cells, dumbbell-shaped in lateral view. Epidermal cells subsquare, wall thickened, cuticle scattered with small prisms of calcium oxalate and sandy crystals, 1.5~7.5 μm in diameter. Tracheids mainly spiral, bordered-pitted and singly-pitted, 5~13 μm in diameter. Parenchymatous cells contain resin canals, 105~120 μm in diameter. Phloem fibers slender, fusiform, mostly broken and singly scattered.

Thin layer chromatographic identification test (General rule 1010.3):

1. Sample solution: Add 0.5 g of powdered sample to 5 mL of ethanol, ultrasonicate for 1 hour, filter, evaporate and make up the filtrate to 2 mL.
2. Reference drug solution: Use 0.5 g of the reference drug as the same method described above.
3. Procedure: Use silica gel F_{254} as the coating substance and a solution of chloroform and ethanol (9:1) as the developing solvent. Apply 5 μL of each of the above solutions to the plate. Once the top of the solvent rise to about 5~10 cm from the origin, dry in air. Spray with a 1% solution of vanillin in sulfuric acid (Vanillin/H_2SO_4 TS) and examine under the ultraviolet light at 365 nm. The spots in the chromatogram obtained from the sample solution correspond in R_f values and color to the spots in the chromatogram obtained from the reference drug solution.

Impurities and other requirements:

1. Loss on drying: Not more than 11.0% under heating at 105℃ for 5 hours (General rule 5008).
2. Total ash: Not more than 10.0% (General rule 5004).
3. Acid-insoluble ash: Not more than 4.0% (General rule 5004).

Assay:

1. Water extractives: Carry out the method for determination of water extractives (General rule 5006).
2. Dilute ethanol extractives: Carry out the method for determination of dilute ethanol-soluble extractives (General rule 5006).

Storage: Store in a cool and dry place.
Usage: Hemostatic medicinal.
Dosage: 6~12 g, used an appropriate amount for external use.

PLATYCLADI SEMEN
柏子仁
Bo Zih Ren / Bo Zi Ren
Platycladi Seed

Platycladi seed is the dried ripe seed of *Platycladus orientalis* (L.) Franco (Fam. Cupressaceae).
It contains not less than 4.0% of dilute ethanol-soluble extractives and not less than 5.0% of water extractives.

Description: Narrowly ovate or oblong, 0.4~0.7 cm in length, 0.15~0.3 cm in diameter. Externally pale yellow or yellowish-white as fresh, darkened into yellowish-brown after store, oily, covered with membranous tegmen, apex slightly acute, subround-triangle, with a small dark brown dot, base obtusely round, color relatively paler. Fracture creamy white to yellowish-white, endosperm developed, cotyledon 2 or more, oily. Odor slightly aromatic; taste, weak and oily. The better character as plumping, yellowish-white, oily without weeping, without shells and impurities.

Microscopic identification:

1. **Transverse section:** Endotesta composed of 1 row of cells, flattened-rectangular, outer wall slightly thickened. Endosperm developed, parenchymatous

cells of endosperm and cotyledon contain fatty oil and aleurone grains.

Thin layer chromatographic identification test (General rule 1010.3):

1. Sample solution: Add 1.0 g of powdered sample to 5 mL of methanol, ultrasonicate for 30 minutes, filter and use the filtrate.
2. Reference drug solution: Use 1.0 g of the reference drug as the same method described above.
3. Procedure: Use silica gel F_{254} as the coating substance and a solution of chloroform and methanol (8:1) as the developing solvent. Apply 5 μL of each of the above solutions to the plate. Once the top of the solvent rise to about 5~10 cm from the origin, dry in air. Spray with a 5% solution of vanillin in sulfuric acid (Vanillin/H_2SO_4 TS), heat at 105℃ until the spots become visible, and examine under visible light. The spots in the chromatogram obtained from the sample solution correspond in R_f values and color to the spots in the chromatogram obtained from the reference drug solution.

Impurities and other requirements:

1. Loss on drying: Not more than 8.0% under heating at 105℃ for 5 hours (General rule 5008).
2. Total ash: Not more than 16.0% (General rule 5004).
3. Acid-insoluble ash: Not more than 6.0% (General rule 5004).

Assay:

1. Water extractives: Carry out the method for determination of water extractives (General rule 5006).
2. Dilute ethanol extractives: Carry out the method for determination of dilute ethanol-soluble extractives (General rule 5006).

Storage: Store in a cool and dry place, and protect from insects and oil seeping.
Usage: Tranquillizing medicinal.
Dosage: 3~9 g.

PLATYCODI RADIX
桔梗
Jie Geng / Jie Geng
Platycodon Root

Platycodon root is the dried root of *Platycodon grandiflorum* (Jacq.) A. DC. (Fam. Campanulaceae).
It contains not less than 22.0% of dilute ethanol-soluble extractives and not less than 35.0% of water extractives.

Description: Cylindrical or long fusiform, slightly twisted, occasionally branched, 6~25 cm in length, 0.5~2.5 cm in diameter. Apex with a relatively short rhizome (Lutou), rhizome scattered with several crescent-shaped stem scars. Externally white or pale yellow, or yellowish-brown to grayish-brown when unpeeled, with irregularly longitudinal wrinkles and furrows, with transverse lenticel-like scars. Texture hard and fragile, fracture uneven, with radial cleft, bark whitish, cambium ring distinct, wood pale yellow. Odor, slight; taste, slightly sweet and then bitter.

Microscopic identification:

1. **Transverse section:** Several layers of cork cells observed in without removal of outer bark, fine prisms or raphides of calcium oxalate occasionally found. Cortex narrow, usually showing clefts. Phloem broad, scattered with laticiferous tubes, with slightly thick walls, containing granular yellow contents; laticiferous tube groups usually accompanied by sieve tube cells. Cambium in a ring. Xylem vessels singly scattered or severally grouped, arranged radially. Parenchymatous cells contain inulin.
2. **Powder:** Yellowish-white. Inulin abundant (mounting with ethanol TS), fan-shaped or subrounded crystals. Laticiferous tubes usually linked into reticular-shaped, 14~25 μm in diameter, tubes containing yellow oil droplets-like granules. Scalariform and reticulate vessels commonly present, bordered-pitted vessels rarely present.

Thin layer chromatographic identification test (General rule 1010.3):

1. Sample solution: Add 1.0 g of powdered sample to 7% solution of sulfuric acid in ethanol and water (1:3), heat under reflux for 3 hours and cool. Extract with 2 quantities, each of 20 mL, of chloroform. Combine the chloroform extracts and wash it with 30 mL of water twice, discard the washings. Dehydrate the chloroform solution with anhydrous sodium sulfate and filter. Evaporate the filtrate to dryness, dissolve the residue in 1 mL of methanol.
2. Reference drug solution: Use 1.0 g of the reference drug as the same method described above.
3. Procedure: Use silica gel F_{254} as the coating substance and a solution of chloroform and ethyl ether (2:1) as the developing solvent. Apply 10 μL of each of the above solutions to the plate. Once the top of the solvent rise to about 5~10 cm from the origin, dry in air. Spray with a 10% solution of sulfuric acid in ethanol (H_2SO_4/EtOH TS), heat at 105℃ until the spots become visible. The spots in the chromatogram obtained from the sample solution correspond in R_f values and color to the spots in the chromatogram obtained from the reference drug solution.

Impurities and other requirements:

1. Total ash: Not more than 6.0% (General rule 5004).
2. Acid-insoluble ash: Not more than 2.0% (General rule 5004).

3. Total heavy metals: Not more than 10.0 ppm (General rule 3005).
4. Arsenic (As): Not more than 5.0 ppm (General rule 3006, 3049, 3050).

Assay:
1. Water extractives: Carry out the method for determination of water extractives (General rule 5006).
2. Dilute ethanol extractives: Carry out the method for determination of dilute ethanol-soluble extractives (General rule 5006).

Storage: Refrigerate or store in a cool and dry place, and protect from moisture and insects.
Usage: Phlegm-dispelling medicinal.
Dosage: 3~10 g.

POGOSTEMONIS HERBA
廣藿香
Guang Huo Siang / Guang Huo Xiang
Cablin Patchouli Herb

Cablin patchouli herb is the dried aerial part of *Pogostemon cablin* (Blanco) Benth. (Fam. Labiatae).

Description: Stems slightly square, frequently branched, branches slightly curved, 30~60 cm in length, 0.2~0.7 cm in diameter; externally pubescent; texture fragile, easily broken, fracture medullated in the center; old stems subcylindrical, 1~1.2 cm in diameter, covered with grayish-brown cork. Leaves opposite, crumpled into masses, ovate or elliptical as whole, 4~9 cm in length, 3~7 cm wide; grayish-white pubescences on both surfaces; apex short-acute or obtuse-rounded, base cuneate or obtusely rounded, margin irregularly serrate; petioles slender, 2~5 cm in length, pubescent. Odor, aromatic, characteristic; taste, slightly bitter.

Microscopic identification:
1. **Transverse section:**
   (1) Stem: Epidermis composed of 1 row of arranging irregularly cells, with non-glandular hairs, 1- to 5-celled, beneath the epidermis showing 3~5 rows of cork cells. The outer part of cortex showing 4~10 rows of collenchymatous cells, the inner part of cortex showing parenchymatous cells, containing large intercellular spaces with interspace glandular hairs inside, the head unicellular, elongated-rounded or subrounded, 75~195 μm in length, containing yellow to yellowish-green volatile oil, the stalk short, 1- to 2-celled, mostly linked with cortex cells, parenchymatous cells also contain raphides of calcium oxalate, about 15 μm in length. Pericyclic fibers in bundles. Phloem narrow. Xylem well developed at the 4 corners, composed of vessels, xylem parenchymatous cells and xylem fibers, all lignified. Pith slightly lignified, containing raphides of calcium oxalate and flaky crystals, starch granules rare.
2. **Powder:** Pale brown. Non-glandular hairs 1- to 8-celled, straight or acute at the apex, 97~590 μm in length, wall with spiny protuberance, some lumens contain yellowish-brown contents, some cells contain fine raphides crystals at the base. Glandular scales with head 8-celled, 37~70 μm in diameter; the stalk unicellular, extremely short. Interspace glandular hairs present in intercellular spaces of mesophyll or parenchyma tissue of stem, the head unicellular, irregular sac-shaped, 13~50 μm in diameter, 23~43 μm in length, containing golden oil contents; the stalk short, 1- to 2-celled. Glandular hairs with the head 2-celled or occasionally unicellular; the stalk 1- to 3-celled, extremely short. Raphides of calcium oxalate fine, scattered in mesophyll, parenchymatous cells of stem or fibers, 3~27 μm in length. Epidermal cells of leaf irregular, stomata diacytic. Pericyclic fibers singly scattered or several in bundles, pale yellow or yellowish-green, long-fusiform, 11~37 μm in diameter, lignified, pits relatively sparse, occasionally with septa, lumen mostly containing yellowish-brown contents, occasionally with fine granular crystals. Xylem fibers in bundles, 13~35 μm in diameter, walls lignified, pits obliquely cleft-shaped or V-shaped, usually with septa, linking with rays cells. Vessels bordered-pitted, reticulate, spiral or annular. Parenchymatous cells of pith large, with pits, some cells contain fine raphides crystals.

Thin layer chromatographic identification test (General rule 1010.3):
1. Sample solution: Add a quantity of coarse powdered sample, carry out the method for determination of volatile oil (General rule 5007), and dissolve 0.5 mL of the volatile oil in ethyl acetate to 5 mL.
2. Reference drug solution: Use a quantity of the reference drug as the same method described above.
3. Reference standard solution: Weigh accurately a quantity of patchouli alcohol and dissolve in ethyl acetate to produce a solution containing 2.0 mg per mL.
4. Procedure: Use silica gel F_{254} as the coating substance and a solution of petroleum ether (30~60 ℃), ethyl acetate and glacial acetic acid (95:5:0.2) as the developing solvent. Apply 1~2 μL of each of the above solutions to the plate. Once the top of the solvent rise to about 5~10 cm from the origin, dry in air. Spray with a 5% solution of ferric chloride in ethanol ($FeCl_3$/EtOH TS) and heat until the spots become visible. The spots in the chromatogram obtained from the sample solution

correspond in R_f values and color to the spots in the chromatogram obtained from the reference drug solution and the reference standard solution.

Storage: Store in a cool and dry place.
Usage: Dampness-resolving with aroma medicinal.
Dosage: 4.5~9 g.

POLYGALAE RADIX
遠志
Yuan Jhih / Yuan Zhi
Polygala Root

Polygala root is the dried root of *Polygala tenuifolia* Willd. or *Polygala sibirica* L. (Fam. Polygalaceae).

Description: Slender, cured and cylindrical, with 1 to numerous lateral roots. Main root 10~20 cm in length, 2~10 mm in diameter; externally pale grayish-brown, with longitudinal furrows and dented transverse fissures, easily broken, fracture non-fibrous, margin irregular and undulated. Cork pale grayish-brown, cortex thick, with numerous large broken space. Wood pale brown, round or elliptical, often split along the primary pith ray to cuneiform. Odor, slightly stinking; taste, slightly pungent.

Microscopic identification:
1. **Transverse section:** Cork composed of several rows of pale brown cells. Cortex composed of several rows of parenchymatous cells, with clefts. Phloem relatively broad. Cambium in a distinct ring. Xylem well developed, rays present in 1~2 rows. Parenchymatous cells contain oil droplets; some cells inside phloem contain clusters of calcium oxalate.

Thin layer chromatographic identification test (General rule 1010.3):
1. Sample solution: Add 0.5 g of powdered sample to 20 mL of 70% methanol, ultrasonicate for 30 minutes, filter, evaporate the filtrate to dryness, and dissolve the residue in 1 mL of methanol.
2. Reference drug solution: Use 0.5 g of the reference drug as the same method described above.
3. Reference standard solution: Weigh accurately a quantity of polygalaxanthone Ⅲ and dissolve in methanol to produce a solution containing 0.5 mg per mL.
4. Procedure: Use silica gel F_{254} as the coating substance and the lower layer of a solution of chloroform, methanol and water (7:3:1) as the developing solvent. Apply 2 μL of each of the above solutions to the plate. Once the top of the solvent rise to about 5~10 cm from the origin, dry in air. Examine under the ultraviolet light at 365 nm. The spots in the chromatogram obtained from the sample solution correspond in R_f values and color to the spots in the chromatogram obtained from the reference drug solution and the reference standard solution.

Impurities and other requirements:
1. Foreign matter: Not more than 10.0%, including stems (General rule 5003).
2. Total ash: Not more than 6.0% (General rule 5004).
3. Total heavy metals: Not more than 10.0 ppm (General rule 3005).
4. Arsenic (As): Not more than 5.0 ppm (General rule 3006, 3049, 3050).
5. Pesticide residues:
   (1) The total DDT content: Not more than 0.2 ppm (General rule 3052).
   (2) The total BHC content: Not more than 0.2 ppm (General rule 3052).

Storage: Store in a ventilated and dry place.
Usage: Phlegm-dispelling medicinal.
Dosage: 3~10 g.

POLYGONATI ODORATI RHIZOMA
玉竹
Yu Jhu / Yu Zhu
Fragrant Solomonseal Rhizome

Fragrant solomonseal rhizome is the dried rhizome of *Polygonatum odoratum* (Mill.) Druce (Fam. Liliaceae). It contains not less than 46.0% of dilute ethanol-soluble extractives and not less than 46.0% of water extractives.

Description: Long cylindrical, slightly compressed, few branched, varying in length, 0.3~1.6 cm in diameter. Externally pale yellowish-brown, with longitudinal wrinkles and slightly protuberant annulations, exhibiting fibrous root scars and a disk-like stem scar. Texture hard or pliable when moistened, fracture horny. Odor, slight; taste, sweetish and viscous on chewing.

Microscopic identification:
1. **Transverse section:** Epidermal cells arranged in order, suboblate in shape, outer walls slightly thickened, horny. The spaces between cortex and stele are indistinct. Parenchymatous cells scattered with numerous subrounded mucilage cells, 60~190 μm in diameter, containing raphides of calcium oxalate. Collateral vascular bundles scattered.

Thin layer chromatographic identification test (General rule 1010.3):
1. Sample solution: Add 1.0 g of powdered sample to 10 mL of ethanol, ultrasonicate for 30 minutes, evaporate the filtrate to dryness, and dissolve the residue in 1 mL of 70% ethanol.
2. Reference drug solution: Use 1.0 g of the reference drug as the same method described above.
3. Procedure: Use silica gel F_{254} as the coating substance and the supernatant of *n*-butanol, glacial

acetic acid and water (4:1:5) as the developing solvent. Apply 5 μL of each of the above solutions to the plate. Once the top of the solvent rise to about 5~10 cm from the origin, dry in air. Spray with a solution of α-naphthol in methanol (α-Naphthol/MeOH TS) and heat at 105℃ until the spots become visible. The spots in the chromatogram obtained from the sample solution correspond in R_f values and color to the spots in the chromatogram obtained from the reference drug solution.

Impurities and other requirements:

1. Total ash: Not more than 4.0% (General rule 5004).
2. Acid-insoluble ash: Not more than 1.0% (General rule 5004).

Assay:

1. Water extractives: Carry out the method for determination of water extractives (General rule 5006).
2. Dilute ethanol extractives: Carry out the method for determination of dilute ethanol-soluble extractives (General rule 5006).

Storage: Refrigerate or store in a ventilated and dry place, and protect from mold and insects.
Usage: Tonifying and replenishing medicinal (Yin-tonifying medicinal).
Dosage: 6~12 g.

POLYGONATI RHIZOMA
黃精
Huang Jing / Huang Jing
Solomonseal Rhizome

Solomonseal rhizome is the dried rhizome of *Polygonatum cyrtonema* Hua, *Polygonatum sibiricum* Delar. ex Redoute or *Polygonatum kingianum* Coll. et Hemsl. (Fam. Liliaceae).
It contains not less than 39.0% of dilute ethanol-soluble extractives and not less than 39.0% of water extractives.

Description:

1. Rhizome of *Polygonatum cyrtonema* (Jiang Sing Huang Jing or Bai Ji Huang Jing): Flattened, elongated and connected in groups of several tubercles. Fleshy. Up to about 10 cm in length as whole, 1~2.5 cm in width, often 5 tubercles connected in a group, the both sides with short branches, the shape just like Bletillae Rhizoma, 2.5~7.5 cm in width, the upper nodes relatively small. Externally grayish-yellow or yellowish-brown, with irregular wrinkles, the upper part of nodes with discoidal stem scars, 0.8~1.5 cm in diameter, scattered with numerous dots of vascular bundles. The upper part of short branches with bud scars. The whole with undulating annulations, distinct at the lower part. Internodes 0.2~1 cm in length, scattered with fine and round root scars. Texture hard, fracture horny. Odor, slight; taste, slightly sweet and viscous on chewing.
2. Rhizome of *Polygonatum sibiricum* (Ji Tou Huang Jing): Slender and cylindrical, slightly flattened, up to about 10 cm in length, 0.5~1.5 cm in diameter. One side or both sides slightly swollen as the head of chicken or with short branches, 1.5~2 cm in width. Externally yellowish-white or grayish-yellow, with longitudinal wrinkles and round stem scars. Stem scars 5~8 mm in diameter. Internodes 0.3~1.5 cm in length.
3. Rhizome of *Polygonatum kingianum* (Da Huang Jing): Tuberculated or moniliform, up to more than 10 cm in length, 2~6 cm in width. Externally pale yellow to yellowish-brown, with irregular wrinkles and discoidal stem scars with a sunken circumference.

Microscopic identification:

1. **Transverse section:**
   (1) Rhizome of *Polygonatum cyrtonema*: Epidermis composed of 1 layer of cells, covered with cuticle. Cortex relatively narrow, cell boundaries indistinct with stele. Vascular bundles of stele scattered, mostly in collateral type, amphivasal type occasionally found. Parenchyma tissue scattered with mucilage cells, 51~323 μm in length, 22~158 μm in diameter, containing raphides of calcium oxalate, 60~156 μm in length.
   (2) Rhizome of *Polygonatum sibiricum*: Vascular bundles mostly collateral, amphivasal type rare, relatively small at the outer part, gradually larger inward; mucilage cells 96~253 μm in length, 44~187 μm in diameter, raphides of calcium oxalate 68~161 μm in length.
   (3) Rhizome of *Polygonatum kingianum*: Vascular bundles mostly amphivasal, collateral type rare; mucilage cells 115~210 μm in length, 81~160 μm in diameter, raphides bundles 115~204 μm in length.
2. **Powder:** Pale grayish-yellow. Epidermal cells subsquare, subrectangular or irregular, 30~90 μm in length, 20~30 μm in width. Cortex cells subrounded or irregular, 70~150 μm in length, 75~90 μm in width. Vessels bordered-pitted or spiral, 15~30 μm in diameter, 150~225 μm in length. Raphides crystals scattered or in bundles, about 150 μm in length.

Thin layer chromatographic identification test (General rule 1010.3):

1. Sample solution: Add 1.0 g of powdered sample to 15 mL of methanol, ultrasonicate for 30 minutes, filter and use the filtrate.
2. Reference drug solution: Use 1.0 g of the reference drug as the same method described above.

3. Procedure: Use silica gel F_{254} as the coating substance and a solution of *n*-butanol, glacial acetic acid and water (7:1:2) as the developing solvent. Apply 10 μL of each of the above solutions to the plate. Once the top of the solvent rise to about 5~10 cm from the origin, dry in air. Spray with a solution of *p*-anisaldehyde (*p*-Anisaldehyde/H_2SO_4 TS) and heat at 105℃ until the spots become visible. The spots in the chromatogram obtained from the sample solution correspond in R_f values and color to the spots in the chromatogram obtained from the reference drug solution.

Impurities and other requirements:
1. Total ash: Not more than 4.0% (General rule 5004).
2. Acid-insoluble ash: Not more than 4.0% (General rule 5004).

Assay:
1. Water extractives: Carry out the method for determination of water extractives (General rule 5006).
2. Dilute ethanol extractives: Carry out the method for determination of dilute ethanol-soluble extractives (General rule 5006).

Storage: Refrigerate or store in a cool and dry place, and protect from mold and insects.
Usage: Tonifying and replenishing medicinal (Yin-tonifying medicinal).
Dosage: 9~15 g.

POLYGONI CUSPIDATI RHIZOMA ET RADIX
虎杖
Hu Jhang / Hu Zhang
Giant Knotweed Rhizome and Root

Giant knotweed rhizome and root are the dried rhizome and root of *Polygonum cuspidatum* Sieb. et Zucc. (Fam. Polygonaceae).
It contains not less than 20.0% of dilute ethanol-soluble extractives, not less than 12.0% of water extractives, not less than 0.60% of emodin and not less than 0.15% of polydatin.

Description: Cylindrical or irregular thick slices, varying in length, about 1~7 cm in length, 0.5~2.5 cm in diameter. Externally brown, with distinct longitudinal wrinkles, rootlet, rootlet scars and nodes. Texture hard, uneasily broken, fracture brownish-yellow, with pith or hollow, fibrous, bark thin, radial, and easily separated from wood. Odor, slight; taste, slightly bitter and astringent.

Microscopic identification:
1. **Transverse section:**
   (1) Rhizome: Outermost layer of cork composed of 5~10 rows of flat cells, brownish-red. Cortex relatively narrow, cortex and phloem all scattered with fiber bundles and clusters of calcium oxalate. Cambium in a ring. Xylem cells all lignified, containing xylem fibers, vessels relatively small, subpolygonal, several in a bundle or singly scattered in xylem fibers and xylem parenchymatous cells. Pith cells easily broken. Parenchymatous cells contain starch granules and clusters of calcium oxalate.
   (2) Root: Compared with rhizome without pith.
2. **Powder:** Yellowish-brown. Clusters of calcium oxalate extremely abundant, about 30~80 μm in diameter. Starch granules numerous, simple or compound granules composed of 4 components. Vessels bordered-pitted, mainly annular and reticulate, about 30~34 μm in diameter. Xylem rays with cell walls lignified and thickened, cells subrectangular, with dense pits.

Thin layer chromatographic identification test (General rule 1010.3):
1. Sample solution: Add 1.0 g of powdered sample to 15 mL of methanol, ultrasonicate for 30 minutes, filter and use the filtrate.
2. Reference drug solution: Use 1.0 g of the reference drug as the same method described above.
3. Procedure: Use silica gel F_{254} as the coating substance and a solution of chloroform and ethanol (9:1) as the developing solvent. Apply 10 μL of each of the above solutions to the plate. Once the top of the solvent rise to about 5~10 cm from the origin, dry in air. Examine under the ultraviolet light at 365 nm. The spots in the chromatogram obtained from the sample solution correspond in R_f values and color to the spots in the chromatogram obtained from the reference drug solution.

Impurities and other requirements:
1. Loss on drying: Not more than 12.0% under heating at 105℃ for 5 hours (General rule 5008).
2. Total ash: Not more than 5.0% (General rule 5004).
3. Acid-insoluble ash: Not more than 1.0% (General rule 5004).

Assay:
1. Emodin:
   (1) Mobile phase: A solution of methanol and 0.1% phosphoric acid (80:20). The ratio varies as required.
   (2) Reference standard solution: Place emodin in a phosphorus pentoxide dryer and depressurize for 24 hours. Weigh accurately a quantity and dissolve in methanol to produce a solution containing 48 μg per mL.
   (3) Sample solution: Weigh accurately 0.1 g of powdered sample, transfer to a conical flask with stopper, add accurately 25 mL of chloroform and 20 mL of sulfuric acid (2.5

mol/L), and weigh. Heat under reflux at 80℃ for 2 hours, cool to room temperature, weigh again, replenish the loss of weight with chloroform, mix well. Separate the chloroform layer and evaporate accurately 10 mL to dryness. Dissolve the residue in methanol, transfer to a 10-mL volumetric flask, dilute with methanol to volume, mix well, filter and use the successive filtrate.

(4) Chromatographic system: The liquid chromatography is equipped with an ultraviolet absorption photometer (wavelength: 254 nm) and a column packed with octadecylsilanized silica gel. The number of theoretical plates of the peak of emodin should not be less than 3,000.

(5) Procedure: Inject accurately 5 μL of each of the reference standard solution and the sample solution into the liquid chromatography apparatus, and calculate the content.

2. Polydatin:

(1) Mobile phase: A solution of acetonitrile and water (23:77). The ratio varies as required.

(2) Reference standard solution: Place polydatin in a phosphorus pentoxide dryer and depressurize for 24 hours. Weigh accurately a quantity and dissolve in dilute ethanol to produce a solution containing 15 μg per mL.

(3) Sample solution: Weigh accurately 0.1 g of powdered sample, add accurately 25 mL of dilute ethanol, and weigh. Heat under reflux for 30 minutes, cool to room temperature, weigh again, replenish the loss of weight with dilute ethanol, mix well, filter the supernatant, and use the successive filtrate.

(4) Chromatographic system: The liquid chromatography is equipped with an ultraviolet absorption photometer (wavelength: 306 nm) and a column packed with octadecylsilanized silica gel. The number of theoretical plates of the peak of polydatin should not be less than 3,000.

(5) Procedure: Inject accurately 10 μL of each of the reference standard solution and the sample solution into the liquid chromatography apparatus, and calculate the content.

3. Water extractives: Carry out the method for determination of water extractives (General rule 5006).

4. Dilute ethanol extractives: Carry out the method for determination of dilute ethanol-soluble extractives (General rule 5006).

Storage: Refrigerate or store in a cool and dry place, and protect from mold and insects.

Usage: Blood-activating and stasis-dispelling medicinal.

Dosage: 9~15 g. Appropriate amount for topical application, made into decoction or oil paste for applyment.

Precaution and warning: Used with caution in pregnancy.

POLYGONI MULTIFLORI CAULIS
首烏藤
Shou Wu Teng / Shou Wu Teng
Tuber Fleeceflower Lianoid Stem

Tuber fleeceflower lianoid stem is the dried lianoid stem of *Polygonum multiflorum* Thunb. (Fam. Polygonaceae). It contains not less than 13.0% of dilute ethanol-soluble extractives and not less than 7.0% of water extractives.

Description: Long cylindrical, frequently twisted, occasionally branched, 0.4~0.7 cm in diameter. Externally purplish-brown, slightly rough, with twisted longitudinal wrinkles and nodes. Nodes swollen, with scars of lateral branches. Cork thin and easily exfoliated to scaly. Texture hard and fragile, easily broken, fracture even, bark reddish-brown, wood pale yellow, vessel pores and ray distinct, pith loose and whitish. Odor, slight; taste, slightly bitter and astringent.

Microscopic identification:

1. **Transverse section:** Outermost layer composed of 3~4 rows of cork cells, containing reddish-brown contents. Cortex relatively narrow, cells irregular in shape, containing yellowish-brown contents and clusters of calcium oxalate. Pericycle fiber bundles arranged in an interrupted ring, walls of fibers relatively thickened and lignified, lumen large, stone cell groups present among the fiber bundles. Phloem relatively broad, cells irregular in shape, arranged densely. Cambium in a ring. Xylem vessels subrounded, singly scattered or 2 in groups, mostly bordered-pitted. Pith relatively small, parenchymatous cells of pith usually hollow, containing clusters of calcium oxalate.
2. **Powder:** Reddish-brown. Cork cells subsquare, containing reddish-brown contents. Cortex cells irregular in shape, containing yellowish-brown contents and clusters of calcium oxalate, clusters 35~60 μm in diameter. Fiber bundles flaky, 5~10 μm in diameter, with walls thickened and lignified. Vessels bordered-pitted, 20~110 μm in diameter.

Thin layer chromatographic identification test (General rule 1010.3):

1. Sample solution: Add 1.0 g of powdered sample to 10 mL of methanol, ultrasonicate for 30 minutes, filter and use the filtrate.
2. Reference drug solution: Use1.0 g of the reference drug as the same method described above.
3. Reference standard solution: Weigh accurately a quantity of emodin and dissolve in methanol to produce a solution containing 1.0 mg per mL.

4. Procedure: Use silica gel F_{254} as the coating substance and the supernatant of petroleum ether (30~60℃), ethyl acetate and formic acid (15:5:1) as the developing solvent. Apply 2 μL of each of the above solutions to the plate. Once the top of the solvent rise to about 5~10 cm from the origin, dry in air. Examine under the ultraviolet light at 365 nm. The spots in the chromatogram obtained from the sample solution correspond in R_f values and color to the spots in the chromatogram obtained from the reference drug solution and the reference standard solution.

Impurities and other requirements:
1. Loss on drying: Not more than 11.0% under heating at 105℃ for 5 hours (General rule 5008).
2. Total ash: Not more than 10.0% (General rule 5004).
3. Acid-insoluble ash: Not more than 5.0% (General rule 5004).

Assay:
1. Water extractives: Carry out the method for determination of water extractives (General rule 5006).
2. Dilute ethanol extractives: Carry out the method for determination of dilute ethanol-soluble extractives (General rule 5006).

Storage: Store in a cool and dry place.
Usage: Tranquillizing medicinal.
Dosage: 9~15 g.

POLYGONI MULTIFLORI RADIX
何首烏
He Shou Wu / He Shou Wu
Fleeceflower Root Tuber

Fleeceflower root tuber is the dried root tuber of *Polygonum multiflorum* Thunb. (Fam. Polygonaceae).
It contains not less than 20.0% of dilute ethanol-soluble extractives, not less than 20.0% of water extractives and not less than 0.10% of combined anthraquinone, calculated with the total amount of emodin and physcion.

Description: Irregular fusiform or in masses, 6.5~15 cm in length, 4~12 cm in diameter. Externally reddish-brown, lumpy, with irregular wrinkles and in longitudinal furrows, lenticels transverse, with distinct rootlet scars at both ends and fibrous vascular bundles. Texture compact, uneasily broken, fracture pale reddish-brown, starchy, bark scattered with 4~11 abnormal vascular bundles, forming brocaded patterns, cambium ring in central part distinctly, some containing a woody core. Odor, slight; taste, slightly bitter and astringent.

Microscopic identification:
1. **Transverse section:** Cork composed of several layers of cells filled with reddish-brown contents. The outer part of phloem surrounded by 2 types of allotype vascular bundles, single or compound, both collateral. The central cambium in a ring, vessels relatively less, surrounded by tracheids and a few xylem fibers, primary xylem existed in the center. Parenchymatous cells contain starch granules and clusters of calcium oxalate.
2. **Powder:** Yellowish-brown. Starch granules numerous, simple granules spheroidal or hemispheroidal, 5~27 μm in diameter, hilum cleft-shaped or stellated, striations indistinct; compound granules composed of 2~9 components. Clusters of calcium oxalate numerous, 10~110 μm in diameter. Bordered-pitted vessels vary in size, occasionally xylem fibers present.

Thin layer chromatographic identification test (General rule 1010.3):
1. Sample solution: Add 1.0 g of powdered sample to 10 mL of methanol, ultrasonicate for 30 minutes, filter and use the filtrate.
2. Reference drug solution: Use 1.0 g of the reference drug as the same method described above.
3. Procedure: Use silica gel F_{254} as the coating substance and a solution of *n*-hexane and ethyl acetate (3:2) as the developing solvent. Apply 5 μL of each of the above solutions to the plate. Once the top of the solvent rise to about 5~10 cm from the origin, dry in air. Spray with a 10% solution of sulfuric acid in ethanol (H_2SO_4/EtOH TS) and examine under the ultraviolet light at 365 nm. The spots in the chromatogram obtained from the sample solution correspond in R_f values and color to the spots in the chromatogram obtained from the reference drug solution.

Impurities and other requirements:
1. Loss on drying: Not more than 10.0% under heating at 105℃ for 5 hours (General rule 5008).
2. Total ash: Not more than 4.0% (General rule 5004).
3. Acid-insoluble ash: Not more than 1.0% (General rule 5004).
4. Total heavy metals: Not more than 10.0 ppm (General rule 3005).
5. Arsenic (As): Not more than 5.0 ppm (General rule 3006, 3049, 3050).

Assay:
1. Emodin and physcion (combined anthraquinone):
   (1) Mobile phase: A solution of methanol and 0.1% phosphoric acid (80:20). The ratio varies as required.
   (2) Reference standard solution: Weigh accurately a quantity of emodin and physcion and dissolve in methanol to produce a solution containing 80 μg and 40 μg per mL of each.
   (3) Sample solution: Weigh accurately 1.0 g of powdered sample in a conical flask with

stopper, accurately add 50 mL of methanol and weigh, heat under reflux for 1 hour, cool, weigh again, replenish the loss of the weight with methanol, mix well, filter and use 5 mL of the successive filtrate as the sample solution A (for determination of free anthraquinone). Measure accurately another more 25 mL of the successive filtrate to a conical flask with stopper, evaporate to dryness, add accurately 20 mL of 8% solution of hydrochloric acid, ultrasonicate for 5 minutes, add 20 mL of chloroform, heat and reflux for 1 hour and cool immediately, then transfer to a separating funnel, wash the container with a small quantity of chloroform and combine the washings to the same separating funnel, separate the chloroform solution and extract the acidic solution again by shaking for three times each with 15 mL of chloroform, combine the chloroform extracts and evaporate to dryness. Dissolve the residue in methanol and transfer to a 10-mL volumetric flask, add methanol to volume, mix well, filter and use the successive filtrate as the sample solution B (for determination of total anthraquinones).

(4) Chromatographic system: The liquid chromatography is equipped with an ultraviolet absorption photometer (wavelength: 254 nm) and a column packed with octadecylsilanized silica gel. The number of theoretical plates of the peak of emodin should not be less than 3,000.

(5) Procedure: Inject accurately 10 μL of each of the reference standard solution and the sample solution into the liquid chromatography apparatus, and calculate the content. Content of combined anthraquinone = content of total anthraquinones － content of free anthraquinone.

2. Water extractives: Carry out the method for determination of water extractives (General rule 5006).
3. Dilute ethanol extractives: Carry out the method for determination of dilute ethanol-soluble extractives (General rule 5006).

Storage: Refrigerate or store in a cool and dry place, and protect from insects.
Usage: Tonifying and replenishing medicinal (Blood-tonifying medicinal).
Dosage: 6~15 g.

POLYPORUS
豬苓
Jhu Ling / Zhu Ling
Agaric

Agaric is the dried sclerotium of *Polyporus umbellatus* (Pers.) Fries (Fam. Polyporaceae).
It contains not less than 0.070% of ergosterol.

Description: Irregular-shaped, strip-shaped, subround or compressed-lumped, occasionally branched, 5~25 cm in length, 2~6 cm in diameter. Externally black, grayish-black or brownish-black, crumpled or warty. Texture light and hard, fracture whitish or pale brown, slightly granular and tenacious. Odor, slight; taste, weak. The better character as large, externally black, fracture white and texture light.

Microscopic identification:

1. **Transverse section:** All composed of densely interweaved hyphae. The outer layer 27~54 μm thick, hyphae brown; the inner hyphae colorless, sinuous, 2~10 μm in diameter, occasionally septa visible, with branches or tubercular swellings. Numerous prisms of calcium oxalate among the hyphae, mostly in octahedron cubes, regular octahedrons or irregular polyhedrons, 3~60 μm in diameter, up to 68 μm in length, occasionally with several crystals aggregated.
2. **Powder:** Yellowish-white. Hyphae scattered or aggregated into masses, mostly colorless, less yellowish-brown. Prisms of calcium oxalate mostly in octahedron cubes, regular octahedrons or irregular polyhedrons, 3~68 μm in diameter.

Thin layer chromatographic identification test (General rule 1010.3):

1. Sample solution: Add 1.0 g of powdered sample to 10 mL of methanol, ultrasonicate for 30 minutes, cool, filter, and make up the filtrate to 10 mL.
2. Reference drug solution: Use 1.0 g of the reference drug as the same method described above.
3. Procedure: Use silica gel F_{254} as the coating substance and a solution of *n*-butanol, water and glacial acetic acid (4:1:1) as the developing solvent. Apply 10 μL of each of the above solutions to the plate. Once the top of the solvent rise to about 5~10 cm from the origin, dry in air. Spray a solution of *p*-anisaldehyde in sulfuric acid (*p*-Anisaldehyde/H_2SO_4 TS) and heat until the spots become visible. Examine under the visible light. The spots in the chromatogram obtained from the sample solution correspond in R_f values and color to the spots in the chromatogram obtained from the reference drug solution.

Impurities and other requirements:

1. Loss on drying: Not more than 15.0% under heating at 105℃ for 5 hours (General rule 5008).

2. Total ash: Not more than 12.0% (General rule 5004).
3. Acid-insoluble ash: Not more than 3.0% (General rule 5004).
4. Total heavy metals: Not more than 10.0 ppm (General rule 3005).
5. Arsenic (As): Not more than 5.0 ppm (General rule 3006, 3049, 3050).

Assay:
1. Ergosterol:
   (1) Mobile phase: A solution of methanol.
   (2) Reference standard solution: Weigh accurately a quantity of ergosterol and dissolve in methanol to produce a solution containing 50 μg per mL.
   (3) Sample solution: Weigh accurately 0.5 g of the powdered sample, transfer to a conical flask with stopper, accurately add 10 mL of methanol, weigh, ultrasonicate for 1 hour, cool, weigh again, replenish the loss of the weight with methanol, mix well, filter and use the filtrate.
   (4) Chromatographic system: The liquid chromatography is equipped with an ultraviolet absorption photometer (wavelength: 283 nm) and a column packed with octadecylsilanized silica gel. The number of theoretical plates of the peak of ergosterol should not be less than 5,000.
   (5) Procedure: Inject accurately 20 μL of each of the reference standard solution and the sample solution into the liquid chromatography apparatus, and calculate the content.

Storage: Store in a ventilated and dry place, and protect from moisture and color changing.
Usage: Dampness-draining diuretic medicinal.
Dosage: 6~12 g.

PORIA
茯苓
Fu Ling / Fu Ling
Indian Bread

Indian bread is the dried sclerotium of *Poria cocos* (Schw.) Wolf (Fam. Polyporaceae).

Description:
1. Ge Ling: Subspheroidal, ellipsoid, oblate or irregular-shaped masses, variable in size. Small ones such as a fist, and the larger one up to 30 cm in diameter or larger, up to several catty in weight. Externally thin, brown to blackish-brown, rough, with wrinkles and shrunken, occasionally partly exfoliated. Texture hard and compact, fracture granular, the outer layer pale red, with tiny honeycomb-like holes, inner part white, rarely reddish, some showing the penetrating roots in the center. Odor, slight; taste, weak and viscous on chewing.
2. Fu Ling Pi (the outer of Poria): Irregular-shaped pieces, externally brown to blackish-brown, inner white or pale brown, texture relatively soft and slightly tenacious.
3. Fu Ling Kuai (sliced pieces of Poria): Occurring in cubic pieces, 3~4 cm in length, about 7 mm in width, white, pale red or pale brown.
4. Fu Ling Pian (peeled and cubic Poria): Occurring in thick slices, white, pale red or pale brown, smooth and delicate, easily broken.

Microscopic identification:
1. **Powder:** Grayish-white. Irregularly granular masses and branched masses colorless, dissolved gradually on mounting in chloral hydrate solution. Hyphae colorless or pale brown, slender, slightly curved, branched, 3~8 μm (rarely up to 16 μm) in diameter.

Thin layer chromatographic identification test (General rule 1010.3):
1. Sample solution: Add 1.0 g of powdered sample to 10 mL of methanol, shake for 5 minutes, stand, filter and use the filtrate.
2. Reference drug solution: Use 1.0 g of the reference drug as the same method described above.
3. Procedure: Use silica gel F_{254} as the coating substance and a solution of toluene and ethyl acetate (1:1) as the developing solvent. Apply 5 μL of each of the above solutions to the plate. Once the top of the solvent rise to about 5~10 cm from the origin, dry in air. Spray with a solution of *p*-anisaldehyde in sulfuric acid (*p*-Anisaldehyde/ H_2SO_4 TS) and heat at 105℃ until the spots become visible. The spots in the chromatogram obtained from the sample solution correspond in R_f values and color to the spots in the chromatogram obtained from the reference drug solution.

Impurities and other requirements:
1. Total ash: Not more than 3.0% (General rule 5004).
2. Acid-insoluble ash: Not more than 2.0% (General rule 5004).
3. Total heavy metals: Not more than 10.0 ppm (General rule 3005).
4. Arsenic (As): Not more than 5.0 ppm (General rule 3006, 3049, 3050).

Storage: Refrigerate or store in a cool and dry place, and protect from insects.
Usage: Dampness-draining diuretic medicinal.
Dosage: 9~30 g.

PORTULACAE HERBA
馬齒莧
Ma Chih Sian / Ma Chi Xian
Parslane Herb

Parslane herb is the dried aerial part of *Portulaca oleracea* L. (Fam. Portulacaceae).
It contains not less than 13.0% of dilute ethanol-soluble extractives and not less than 10.0% of water extractives.

Description: Mostly crumpled and rolled into masses. Stems cylindrical, 15~30 cm in length, 0.1~0.2 cm in diameter. Externally yellowish-brown or brown, with distinctly longitudinal furrows, texture fragile, easily broken, fracture yellow. Leaves entire, obovate, 1~2 cm in length, 0.5~1.5 cm in width, greenish-brown. Capsules elliptical or conical, operculum hat-shaped, containing numerous fine black seeds. Odor, slight; taste, slightly sour, with stickiness.

Microscopic identification:

1. **Transverse section:**
   (1) Stem: Epidermis composed of 1 row of subsquare cells, purplish-red, covered with thick cuticle. Cortex occupied 2/3 portion of the stem, parenchymatous cells subrounded or subsquare, with distinct intercellular spaces, heteromorphic stone cells located in the center, prismatical, pale yellow, with clusters of calcium oxalate. Collateral vascular bundles 8~15 arranged in a ring; phloem cells subpolygonal or subsquare; cambium distinct, composed of 1~3 rows of cells; xylem cells subrounded, subpolygonal or subsquare. Pith in the center, cells subrounded, subpolygonal or subsquare, containing clusters of calcium oxalate.
2. **Powder:** Grayish-green. Epidermal cells of leaf polygonal, subsquare or irregular in shape, with stomata. Epidermal cells of stem square, arranged in order, coriaceous, stomata occasionally found. Heteromorphic stone cells subsquare or strip-shaped. Vessels mainly reticulate, spiral or annular. Fibers and tracheids contain pits.

Thin layer chromatographic identification test (General rule 1010.3):

1. Sample solution: Add 2.0 g of powdered sample to 15 mL of methanol, stand for 30 minutes, ultrasonicate for 30 minutes, filter, the filtrate add 0.5 g of activated carbon, mix well then filter, add 2 mL of methanol, wash twice, evaporate the filtrate to 5 mL.
2. Reference drug solution: Use 2.0 g of the reference drug as the same method described above.
3. Procedure: Use silica gel F_{254} as the coating substance and a solution of dichloromethane, methanol and formic acid (4:1:0.2) as the developing solvent. Apply 5 μL of each of the above solutions to the plate. Once the top of the solvent rise to about 5~10 cm from the origin, dry in air. Spray with a 20% solution of sulfuric acid in ethanol (H_2SO_4/EtOH TS), heat at 105℃ for 2 minutes until the spots become visible, examine under the ultraviolet light at 365 nm. The spots in the chromatogram obtained from the sample solution correspond in R_f values and color to the spots in the chromatogram obtained from the reference drug solution.

Impurities and other requirements:

1. Loss on drying: Not more than 15.0% under heating at 105℃ for 5 hours (General rule 5008).
2. Total ash: Not more than 19.0% (General rule 5004).
3. Acid-insoluble ash: Not more than 3.0% (General rule 5004).

Assay:

1. Water extractives: Carry out the method for determination of water extractives (General rule 5006).
2. Dilute ethanol extractives: Carry out the method for determination of dilute ethanol-soluble extractives (General rule 5006).

Storage: Store in a cool and dry place, and protect from moisture.
Usage: Heat-clearing medicinal (Heat-clearing and detoxcating medicinal).
Dosage: 9~15 g.

PRUNELLAE SPICA
夏枯草
Sia Ku Cao / Xia Ku Cao
Prunella Spike

Prunella spike is the dried fruit cluster of *Prunella vulgaris* L. (Fam. Labiatae).
It contains not less than 3.0% of dilute ethanol-soluble extractives, not less than 4.0% of water extractives and not less than 0.20% of rosmarinic acid.

Description: Dried fruit cluster, corolla often fallen off. Clavate, slightly compressed, 1.5~8 cm in length, 0.8~1.5 cm in diameter; brown or pale brown. The whole spike composed of several or up to ten whorls of persistent calyx and bracts, interwhorl 5~7 mm in length, each whorl with 6 persistent calyxes, about 1 cm in length, bilabiate, with four brown ovate nutlets, apex protuberant, the lower of whorl with two opposite bracts; bracts fan-shaped, about 8 mm in length, about 1.2 cm in width, apex acuminate, the upper with distinct striations of vein, the lower with white hairs. Texture light. Odor, aromatic; taste, weak.

Microscopic identification:

1. **Powder:** Dark brown. Numerous multicellular, non-glandular hairs, usually broken into fragments;

unbroken ones composed of 2~12 cells, 74~1250 μm in length, 31~160 μm in width at base. Unicellular non-glandular hairs abundant, subuliform, 23~84 μm in length, 18~66 μm in width at base. Glandular hairs are found in two forms: bicellular head with unicellular stalk and unicellular head with bicellular stalk. Head of glandular scale 44~74 μm in diameter, composed of 4 secretory cells. Upper epidermis of calyx heterocellular, the anticlinal cell wall deeply and undulately curved, and thickened, with distinct pits, the cell contents brown. Lower epidermis of calyx heterocellular, the cell wall slightly and undulately curved, with scattered diacytic stomata. Mesocarp cells polygonal, containing sandy crystals of calcium oxalate. Epidermal cells of testa polygonal, some cell wall with thickened reticular striations.

Thin layer chromatographic identification test (General rule 1010.3):

1. Sample solution: Add 1.0 g of powdered sample to 10 mL of methanol, heat and shake in a water bath for 30 minutes, cool, filter and use the filtrate.
2. Reference drug solution: Use 1.0 g of the reference drug as the same method described above.
3. Procedure: Use silica gel F_{254} as the coating substance and a solution of *n*-hexane and acetone (2:1) as the developing solvent. Apply 5 μL of each of the above solutions to the plate. Once the top of solvent rise to about 5~10 cm from the origin, dry in air. Spray with a solution of *p*-anisaldehyde in sulfuric acid (*p*-Anisaldehyde/H_2SO_4 TS) and heat at 105℃ until the spots become visible. The spots in the chromatogram obtained from the sample solution correspond in R_f values and color to the spots in the chromatogram obtained from the reference drug solution.

Impurities and other requirements:

1. Loss on drying: Not more than 15.0% under heating at 105℃ for 5 hours (General rule 5008).
2. Total ash: Not more than 14.0% (General rule 5004).
3. Acid-insoluble ash: Not more than 6.0% (General rule 5004).

Assay:

1. Rosmarinic acid:
   (1) Mobile phase: A solution of methanol and 0.1% trifluoroacetic acid (42:58). The ratio varies as required.
   (2) Reference standard solution: Weigh accurately a quantity of rosmarinic acid and dissolve in dilute ethanol to produce a solution containing 0.5 mg per mL.
   (3) Sample solution: Weigh accurately 0.5 g of powdered sample, transfer to a conical flask with stopper, add accurately 50 mL of dilute ethanol, ultrasonicate for 30 minutes, cool, weigh again, replenish the loss of the weight with dilute ethanol, mix well, filter and use the successive filtrate.
   (4) Chromatographic system: The liquid chromatography is equipped with an ultraviolet absorption photometer (wavelength: 330 nm) and a column packed with octadecylsilanized silica gel. The number of theoretical plates of the peak of rosmarinic acid should not be less than 6,000.
   (5) Procedure: Inject accurately 5 μL of each of the reference standard solution and the sample solution into the liquid chromatography apparatus, and calculate the content.
2. Water extractives: Carry out the method for determination of water extractives (General rule 5006).
3. Dilute ethanol extractives: Carry out the method for determination of dilute ethanol-soluble extractives (General rule 5006).

Storage: Store in a ventilated and dry place.
Usage: Heat-clearing medicinal (Heat-clearing and fire-purging medicinal).
Dosage: 9~15 g.

PSEUDOSTELLARIAE RADIX
太子參
Tai Zih Shen / Tai Zi Shen
Heterophylly Falsestarwort Root Tuber

Heterophylly falsestarwort root tuber is the dried root tuber of *Pseudostellaria heterophylla* (Miq.) Pax ex Pax et Hoffm. (Fam. Caryophyllaceae).
It contains not less than 26.0% of dilute ethanol-soluble extractives and not less than 27.0% of water extractives.

Description: Fusiform or slat-shaped, about 2~6 cm in length, 3~6 mm in diameter. Externally yellowish-white, translucent, with fine longitudinal wrinkles and dented rootlet scars. Root stock obtuse, remained with stem scars, the bottom tapering. Texture fragile, easily broken, fracture pale yellow. Odor, slight; taste, slightly bitter.

Microscopic identification:

1. **Transverse section:** Cork composed of 3~6 rows of subsquare cells. Cortex composed of 5~8 rows of subsquare or polygonal parenchymatous cells, containing starch granules and clusters of calcium oxalate. Vascular bundles radially disposed. Phloem relatively narrow. Cambium in a distinct ring. Xylem broad. Xylem parenchymatous cells with distinct intercellular spaces filled with abundant starch granules, and clusters of calcium oxalate. Vessels individually scattered or grouped in 2~3, arranged radially, mainly spiral and annular, 8~30 μm in diameter. Pith small.

2. **Powder:** Pale yellow. Starch granules mainly in individual, subrounded, with distinct striation and hilum. Vessels mainly spiral and annular, 8~30 μm in diameter, slightly lignified. Clusters of calcium oxalate 50 μm in diameter.

Thin layer chromatographic identification test (General rule 1010.3):
1. Sample solution: Add 1.0 g of powdered sample to 10 mL of methanol, ultrasonicate for 30 minutes, filter and evaporate the filtrate to dryness, dissolve the residue in 1 mL of methanol.
2. Reference drug solution: Use 1.0 g of the reference drug as the same method described above.
3. Procedure: Use silica gel F_{254} as the coating substance and a solution of *n*-butanol, glacial acetic acid and water (4:1:1) as the developing solvent. Apply 5 μL of each of the above solutions to the plate. Once the top of the solvent rise to about 5~10 cm from the origin, dry in air. Spray with a 1% solution of ninhydrin in ethanol (ninhydrin /EtOH TS) and heat at 105℃. The spots in the chromatogram obtained from the sample solution correspond in R_f values and color to the spots in the chromatogram obtained from the reference drug solution.

Impurities and other requirements:
1. Loss on drying: Not more than 13.0% under heating at 105℃ for 5 hours (General rule 5008).
2. Total ash: Not more than 4.0% (General rule 5004).
3. Acid-insoluble ash: Not more than 1.0% (General rule 5004).

Assay:
1. Water extractives: Carry out the method for determination of water extractives (General rule 5006).
2. Dilute ethanol extractives: Carry out the method for determination of dilute ethanol-soluble extractives (General rule 5006).

Storage: Store in a cool and dry place, and protect from moisture and insects.
Usage: Tonifying and replenishing medicinal (Qi-tonifying medicinal).
Dosage: 9~30 g.

PSORALEAE FRUCTUS
補骨脂
Bu Gu Jhih / Bu Gu Zhi
Malaytea Scurfpea Fruit

Malaytea scurfpea fruit is the dried ripe fruit of *Psoralea corylifolia* L. (Fam. Leguminosae).
It contains not less than 10.0% of dilute ethanol-soluble extractives, not less than 9.0% of water extractives and not less than 0.70% of the total amount of psoralen and isopsoralen.

Description: Flattened-ellipsoidal or subreniform, 3~5 mm in length, about 3 mm in width. Externally dark brown or black, with finely reticulate wrinkles, center slightly dented, one side slightly flattened, with a strip-shape hilum. Pericarp thin, seed 1, cotyledons 2, fleshy. Texture hard. Odor, aromatic; taste, bitter.

Microscopic identification:
1. **Transverse section:** Exocarp composed of 1 row of epidermal cells. Intramural glands arranged under the epidermal cells of the exocarp and mostly broken off. Mesocarp composed of parenchyma tissue and small vascular bundles; some parenchymatous cells contain minute crystals of calcium oxalate. Epidermal cells of testa composed of 1 row of 35~63 μm in length palisade cells and 1 row of dumbbell-shaped support cells, and below it, several rows of shrunken parenchymatous cells present. Endodermis of testa composed of 1 row of elongated-oblong or subrounded pigmented parenchymatous cells. Cotyledon cells filled with aleurone grains and oil droplets, while the endosperm and radical composed of parenchymatous cells.
2. **Powder:** Grayish-yellow. Epidermal cells of testa 7~14 μm in width, cell wall V-shaped thickened. Support cells dumbbell-shaped, cell wall thickened at the middle part, 26~51 μm in length. Cotyledon cells and fragments of non-glandular hairs are visible.

Thin layer chromatographic identification test (General rule 1010.3):
1. Sample solution: Add 1.0 g of powdered sample to 15 mL of methanol, ultrasonicate for 30 minutes, filter, evaporate the filtrate to dryness, and dissolve the residue in 1 mL of ethyl acetate.
2. Reference drug solution: Use 1.0 g of the reference drug as the same method described above.
3. Procedure: Use silica gel F_{254} as the coating substance and a solution of *n*-hexane and ethyl acetate (4:1) as the developing solvent. Apply 10 μL of each of the above solutions to the plate. Once the top of the solvent rise to about 5~10 cm from the origin, dry in air. Spray with a 10% solution of potassium hydroxide in methanol, examine under the ultraviolet light at 365 nm. The spots in the chromatogram obtained from the sample solution correspond in R_f values and color to the spots in the chromatogram obtained from the reference drug solution.

Impurities and other requirements:
1. Loss on drying: Not more than 9.0% under heating at 105℃ for 5 hours (General rule 5008).
2. Total ash: Not more than 9.0% (General rule 5004).

3. Acid-insoluble ash: Not more than 3.0% (General rule 5004).

Assay:

1. Psoralen and isopsoralen:
   (1) Mobile phase: A solution of methanol and water (55:45). The ratio varies as required.
   (2) Reference standard solution: Weigh accurately a quantity of psoralen and isopsoralen and dissolve in methanol to produce a solution containing 20 μg per mL of each.
   (3) Sample solution: Weigh accurately 0.5 g of powdered sample, transfer to a Soxhlet extractor, accurately add a quantity of 50% methanol, heat under reflux for 2 hours, cool, filter, transfer the solution to 100-mL volumetric flask, add methanol to volume, mix well, filter and use the filtrate.
   (4) Chromatographic system: The liquid chromatography is equipped with an ultraviolet absorption photometer (wavelength: 246 nm) and a column packed with octadecylsilanized silica gel. The number of theoretical plates of the peak of psoralen should not be less than 3,000.
   (5) Procedure: Inject accurately 5~10 μL of each of the reference standard solution and the sample solution into the liquid chromatography apparatus, and calculate the content.
2. Water extractives: Carry out the method for determination of water extractives (General rule 5006).
3. Dilute ethanol extractives: Carry out the method for determination of dilute ethanol-soluble extractives (General rule 5006).

Storage: Store in a ventilated and dry place, and protect from moisture and insects.
Usage: Tonifying and replenishing medicinal (Yang-assisting medicinal).
Dosage: 6~9 g.

PUERARIAE RADIX
葛根
Ge Gen / Ge Gen
Pueraria Root

Pueraria root is the dried root of *Pueraria lobata* (Willd.) Ohwi or *Pueraria thomsonii* Benth. (Fam. Leguminosae). It contains not less than 8.0% of dilute ethanol-soluble extractives, not less than 8.0% of water extractives and not less than 2.5% and 0.25% of puerarin of each of *P. lobata* and *P. thomsonii*.

Description:

1. Root of *Pueraria lobata*: Subcylindrical, often in obliquely or longitudinally cut pieces, 5~35 cm in length, 0.5~1 cm thick, whitish or pale brown. The outer bark occasionally remained with brown cork. Fracture yellowish-white, rough, strongly fibrous, with concentric rings formed by fibers and vascular bundles. Texture lax. Odor, slight; taste, slight.
2. Root of *Pueraria thomsonii*: Cylindrical or subfusiform, 12~15 cm in length, 4~8 cm in diameter, commonly known as "Fen Ge", some in longitudinally or obliquely cut thick slices, vary in size, fracture weakly fibrous, some with hairs. Texture hard and heavy, starchy. Odor, slight; taste, slightly sweet.

Microscopic identification:

1. **Transverse section:**
   (1) Root of *Pueraria lobata*: Cork broad, composed of several rows of densely arranged cork cells. Cortex narrow. Fiber bundles abundant, arranged alternately with the vessel groups, surrounded by parenchymatous cells containing prisms of calcium oxalate, forming crystal fibers. Phloem and xylem arranged alternately as hetero-vascular bundles, forming 1~3 concentric rings; vessels large, densely and alternately arranged with fiber bundles, rays narrow, parenchymatous cells contain a few of starch granules.
   (2) Root of *Pueraria thomsonii*: Hetero-vascular bundles forming 3~5 concentric rings; the other characteristics are the same us *Pueraria lobata*.
2. **Powder:** Pale brown, yellowish-white or pale yellow. Starch granules extremely numerous, simple granules spheroidal, semicircular or polygonal, 3~37 μm in diameter, hilum dotted, cleft-shaped or stellate; compound granules composed of 2~10 components. Fibers mostly in bundles, walls thickened and lignified, surrounded by cells mostly containing prisms of calcium oxalate, forming crystal fibers, walls of crystal-containing cells lignified and thickened. Stone cells rare, subrounded or polygonal, 38~70 μm in diameter. Bordered-pitted vessels relatively large, hexagonal or oblong ones arranged extremely dense.

Thin layer chromatographic identification test (General rule 1010.3):

1. Sample solution: Add 1.0 g of powdered sample to 15 mL of methanol, ultrasonicate for 30 minutes, filter and use the filtrate.
2. Reference drug solution: Use 1.0 g of the reference drug as the same method described above.
3. Reference standard solution: Weigh accurately a quantity of puerarin and dissolve in methanol to produce a solution containing 1.0 mg per mL.
4. Procedure: Use silica gel F_{254} as the coating substance and a solution of ethyl acetate, methanol

and water (12:2:1) as the developing solvent. Apply 5 μL of each of the above solutions to the plate. Once the top of the solvent rise to about 5~10 cm from the origin, dry in air. Examine under the ultraviolet light at 365 nm. The bluish-white spots in the chromatogram obtained from the sample solution correspond in R_f values and color to the spots in the chromatogram obtained from the reference drug solution and the reference standard solution.

Impurities and other requirements:

1. Loss on drying: Not more than 14.0% under heating at 105℃ for 5 hours (General rule 5008).
2. Total ash: Not more than 6.0% (General rule 5004).
3. Acid-insoluble ash: Not more than 2.0% (General rule 5004).
4. Total heavy metals: Not more than 10.0 ppm (General rule 3005).
5. Arsenic (As): Not more than 5.0 ppm (General rule 3006, 3049, 3050).

Assay:

1. Puerarin:
   (1) Mobile phase: A solution of water and acetonitrile (9:1). The ratio varies as required.
   (2) Reference standard solution: Place puerarin in a phosphorus pentoxide dryer at 50°C, depressurize (below 5 mm Hg) for more than 24 hours. Weigh accurately 10 mg and dissolve in 75% methanol to produce a solution contenting 0.2 mg per mL as the reference standard solution 1. Weigh accurately 3 mL and 1 mL of reference standard solution 1 separately, transfer to a 5-mL volumetric flask, add 75% methanol to volume as the reference standard solution 2 and 3. Weigh accurately 1 mL of reference standard solution 1, transfer to a 20-mL volumetric flask, add 75% methanol to volume as the reference standard solution 4.
   (3) Sample solution:
      i. *Pueraria lobata*: Weigh accurately 0.50 g of the powdered sample, accurately add 60 mL of 75% methanol, ultrasonicate for 30 minutes, filter, transfer the filtrate to 200-mL volumetric flask, extract the residue again, combine the filtrate, add 75% methanol to volume, filter, use the successive filtrate. Take 5 mL of the solution to a 10-mL volumetric flask, add 75% methanol to volume, filter through a 0.45-μm filter, and use the filtrate.
      ii. *Pueraria thomsonii*: Weigh accurately 2.50 g of the powdered sample, accurately add 60 mL of 75% methanol, ultrasonicate for 30 minutes, filter, transfer the filtrate to 200-mL volumetric flask, extract the residue again, combine the filtrate, add 75% methanol to volume, filter, use the successive filtrate. Take 5 mL of the solution to a 10-mL volumetric flask, add 75% methanol to volume, filter through a 0.45-μm filter, and use the filtrate.
   (4) Chromatographic system: The liquid chromatography is equipped with an ultraviolet absorption photometer (wavelength: 254 nm) and a column (6.0 mm × 15 cm) packed with octadecylsilanized silica gel (5 μm in particle diameter). The column temperature is maintained at the room temperature. The flow rate is 1.3 mL/min. Inject accurately 10 μL of reference standard solution 1 into the liquid chromatography apparatus. The number of theoretical plates of the peak of puerarin should not be less than 3,000. The number of capacity factor (K) is about 8. Inject reference standard solutions into the liquid chromatography apparatus for five times, and record the peak areas. The relative standard deviation of the peak area of puerarin should not be more than 2%.
   (5) Procedure: Inject accurately 10 μL of each of the reference standard solution and the sample solution into the liquid chromatography apparatus, and calculate the content.
2. Water extractives: Carry out the method for determination of water extractives (General rule 5006).
3. Dilute ethanol extractives: Carry out the method for determination of dilute ethanol-soluble extractives (General rule 5006).

Storage: Refrigerate or store in a cool and dry place, and protect from insects.
Usage: Exterior-releasing medicinal (Wind-heat dispersing medicinal).
Dosage: 9~15 g.

PULSATILLAE RADIX
白頭翁
Bai Tou Wong / Bai Tou Weng
Chinese Pulsatilla Root

Chinese pulsatilla root is the dried root of *Pulsatilla chinensis* (Bunge) Regel (Fam. Ranunculaceae).
It contains not less than 4.6% of pulsatilla saponin B_4.

Description: Long cylindrical or conical, slightly curved, occasionally tortuous into slight flat, 5~20 cm in length, 0.4~2 cm in diameter, occasionally 2~3 branches at the middle or lower part. Externally yellowish-brown or brown, relatively rougher, with irregularly and

longitudinally wrinkles or furrows, bark easily dehiscent or exfoliated, the exposed wood yellow, some exhibiting longitudinally, protuberant and reticulations, usually with decayed depressed holes near root stock. Root stock slightly swollen, occasionally branched, some showing sheath-like pedicel bases and leaves, with white tomenta. Texture hard and fragile, fracture slightly even, yellowish-white, cracks between bark and wood. Odor, slight; taste, slightly bitter and astringent.

Microscopic identification:

1. **Transverse section:** Epidermis, cortex and endodermis usually fallen off. Phloem broad, outer layers of phloem cells brown, with suberized walls; phloem fibers singly scattered or several in bundles, walls relatively thickened, some roots without fibers. Cambium presents in a distinct ring. Xylem rays relatively broad; vessels singly scattered or several in groups; walls of xylem fibers thickened and unlignified. Parenchymatous cells usually present in the center of thick roots.
2. **Powder:** Grayish yellowish-white. Phloem fibers fusiform, 100~390 μm in length, 16~42 μm in diameter, walls 6~13 μm thick, lignified, occasionally with dense striations, pit canals distinct; few fibers extremely short, stone cell-shaped. Non-glandular hairs unicellular, slender, 13~33 μm in diameter, walls 2~14 μm thick, lignified, a few unlignified, occasionally spiral or double spiral striations present on the surface. Bordered-pitted, reticulate and spiral vessels 10~72 μm in diameter. Suberized cells in subpolygonal with relatively less starch granules, simple granules about 22 μm in diameter, compound granules composed of 2~4 components.

Thin layer chromatographic identification test (General rule 1010.3):

1. Sample solution: Add 1.0 g of powdered sample to 10 mL of methanol, ultrasonicate for 10 minutes, filter and use the filtrate.
2. Reference drug solution: Use 1.0 g of the reference drug as the same method described above.
3. Procedure: Use silica gel F_{254} as the coating substance and the supernatant of *n*-butanol, acetic acid and water (4:1:2) as the developing solvent. Apply 5 μL of each of the above solutions to the plate. Once the top of the solvent rise to about 5~10 cm from the origin, dry in air. Spray with a 10% solution of sulfuric acid in ethanol (H_2SO_4/EtOH TS), heat at 105℃ until the spots become visible. The spots in the chromatogram obtained from the sample solution correspond in R_f values and color to the spots in the chromatogram obtained from the reference drug solution.

Assay:

1. Pulsatilla saponin B_4:
   (1) Mobile phase: A solution of methanol and water (64:36). The ratio varies as required.
   (2) Reference standard solution: Weigh accurately a quantity of pulsatilla saponin B_4 and dissolve in methanol to produce a solution containing 0.1 mg per mL.
   (3) Sample solution: Weigh accurately 0.2 g of powdered sample in a conical flask with stopper, add 10 mL of methanol, stopper tightly, ultrasonicate for 25 minutes, cool, filter and transfer the filtrate to 250-mL volumetric flask, wash the container and residue with a small quantity of mobile phase, combine the washings to the same volumetric flask, add mobile phase to the volume and mix well.
   (4) Chromatographic system: The liquid chromatography is equipped with an ultraviolet absorption photometer (wavelength: 201 nm) and a column packed with octadecylsilanized silica gel. The number of theoretical plates of the peak of pulsatilla saponin B_4 should not be less than 3,000.
   (5) Procedure: Inject accurately 20 μL of each of the reference standard solution and the sample solution into the liquid chromatography apparatus, and calculate the content.

Storage: Store in a ventilated and dry place.
Usage: Heat-clearing medicinal (Heat-clearing and detoxcating medicinal).
Dosage: 9~15 g.

PYRROSIAE FOLIUM
石韋
Shih Wei / Shi Wei
Pyrrosia Leaf

Pyrrosia leaf is the dried leaf of *Pyrrosia sheareri* (Bak.) Ching, *Pyrrosia lingua* (Thunb.) Farwell or *Pyrrosia petiolosa* (Christ) Ching (Fam. Polypodiaceae).
It contains not less than 0.20% of chlorogenic acid.

Description:

1. Leaf of *Pyrrosia sheareri*: Fronds slightly crumpled, lanceolate as whole, 10~25 cm in length, 3~5 cm in width, apex acuminate, base auriculate oblique, margin entire, edges usually rolled inwards. Upper surface yellowish-green or grayish-green, sparsely black rounded pits; lower surface densely covered with reddish-brown stellate hairs, occasionally the area between the lateral veins completely covered with brown round spotted sori. Stipes with 4 ribs, 10~20 cm in length, 1.5~3 mm in diameter, slightly twisted, grooved longitudinally. Fronds coriaceous. Odor, slight; taste, slightly astringent and bitter.
2. Leaf of *Pyrrosia lingua*: Fronds lanceolate or oblong-lanceolate, 8~12 cm in length, 1~3 cm in

width, base cuneate and symmetrical. Sori closely and regularly arranged between the lateral veins. Stipes 5~10 cm in length, about 1.5 mm in diameter.

3. Leaf of *Pyrrosia petiolosa*: Fronds mostly rolled into a quill, oblong or ovate-oblong as whole, 3~8 cm in length, 1~2.5 cm in width, base cuneate and symmetrical. Lower surface with indistinct lateral veins and completely covered with sori. Stipes 3~12 cm in length, about 1 mm in diameter.

Microscopic identification:

1. **Transverse section:**
   (1) Stipe: Epidermis composed of 1 row of pale brown cells, cells square, subsquare or subrounded, covered with cuticle. Sclerenchyma underneath epidermis, composed of about 10 layers of cells, arranged in a ring. Phloem fibers of cortex 5~8 layered, lignified, yellowish-brown, cells subrounded, subsquare, subovate or subpolygonal. Cortex subrounded, suboblong, subovate, subrectangular or subpolygonal, with distinct intercellular spaces. The same size of 2 ovoid and large vascular bundles scattered among cortex, amphicribral, surrounded by endodermis containing heteromorphic stone cells; 6~7 ovoid and small vascular bundles, amphicribral, also surrounded by endodermis containing heteromorphic stone cells. The heteromorphic stone cells subovoid with inner walls thickened and outer walls thinned, extremely lignified, red to yellowish-brown. Vascular bundles amphicribral, composed of phloem parenchymatous cells, vessels and fibers; phloem parenchymatous cells subrounded, subovate or subovoid, with outer cells slightly larger and inner cells relatively small; xylem composed of vessels and fibers, arranged in slightly U shape, 7~45 μm in diameter.
2. **Powder:** Yellowish-brown. Sporangia ovoid with stalk, red to yellowish-brown, lignified, subrectangular or subsquare in longitudinal view, lateral and inner walls thickened, outer walls thinned; flat-rectangular in surface view, 28~35 μm in diameter, 36~80 μm in length, central part relatively thick, marginal part thin. Spores numerous, elliptical in sectional view, subrounded or bean-shaped in longitudinal view, 36~48 μm in size, 50~80 μm in length, clefts about the half size of spores, outer walls 2~3 μm thick with warty protuberance. Stellate hairs numerous, extremely large, pale yellowish-brown, accompanying with 5~9 hair cells varying in length, radially arranged in upper and lower layers, cells lanceolate, 25~70 μm in diameter, 160~290 μm in length. Upper epidermal cells of leaf subpolygonal or subrectangular in surface view, anticlinal walls slightly thickened, covered with yellowish-brown non-glandular hairs, easily broken, reticulate scars at base. Lower epidermal cells of leaf subpolygonal or subrectangular in surface view, anticlinal walls relatively thinned; stomata numerous, subrounded, 30~40 μm in diameter, with 3~6 subsidiary cells. Epidermal cells of stipe flat-rectangular or subrectangular in longitudinal view, occasionally with subrounded stomata. Heteromorphic stone cells accompany with endodermis, pale red to dark red, 20~75 μm in diameter, with distinct pits. Fibers long, mostly in bundles, pale yellow, slightly lignified.

Identification:

1. Check flavonoid: Take 5.0 g of powdered sample in a Soxhlet extractor, reflux and extract with methanol, place 2 mL of extract in a test tube, add a few magnesium powder, add 1~2 drops of hydrochloric acid, except *Pyrrosia petiolosa*, a pink color is produced along the test tube wall for *Pyrrosia sheareri* and *Pyrrosia lingua*.

Assay:

1. Chlorogenic acid:
   (1) Mobile phase: A solution of acetonitrile and 0.5% phosphoric acid solution (11:89). The ratio varies as required.
   (2) Reference standard solution: Weigh accurately a quantity of chlorogenic acid, transfer to an amber volumetric flask, and dissolve in 50% methanol to produce a solution containing 40 μg per mL.
   (3) Sample solution: Weigh accurately 0.2 g of powdered sample in a conical flask with stopper, add accurately 25 mL of 50% methanol, weigh, ultrasonicate for 45 minutes, cool, weigh again, compensate the loss of the weight with 50% methanol, mix well, filter and use the successive filtrate.
   (4) Chromatographic system: The liquid chromatography is equipped with an ultraviolet absorption photometer (wavelength: 326 nm) and a column packed with octadecylsilanized silica gel. The number of theoretical plates of the peak of chlorogenic acid should not be less than 2,000.
   (5) Procedure: Inject accurately 10 μL of each of the reference standard solution and the sample solution into the liquid chromatography apparatus, and calculate the content.

Storage: Store in a ventilated and dry place, and protect from moisture and color changing.
Usage: Dampness-draining diuretic medicinal.
Dosage: 6~12 g.

QUISQUALIS FRUCTUS
使君子
Shih Jyun Zih / Shi Jun Zi
Rangooncreeper Fruit

Rangooncreeper fruit is the dried ripe fruit of *Quisqualis indica* L. (Fam. Combretaceae), extract seeds as needed. It contains not less than 6.0% of water extractives of the dried ripe fruit and not less than 0.20% of trigonelline of the seed.

Description: Fruit ellipsoidal or ovate, attenuate at the both ends, 5-ribbed in longitudinally, occasionally 4 to 9-ribbed, 2.5~4 cm in length, 1.5~1.8 cm in diameter. Externally purplish-brown or blackish-brown, smooth, slightly lustrous. Apex narrowly acute, base slight obtuse rounded, with a distinct rounded scar of fruit stalk. Texture hard and light. Seed long-ellipsoidal, 1~2 cm in length; externally blackish-brown, with longitudinal wrinkles and furrows; testa thin, easily stripped; cotyledons 2, thick, greenish-yellow. Odor, slightly aromatic; taste, slightly sweet.

Microscopic identification:

1. **Transverse section:** Epidermis of pericarp composed of 1 layer of cells, cells varying in shape, walls slightly thickened, covered with cuticle, lumen filled with yellowish-brown resin-like contents. Mesocarp composed of flaky and lignified reticulate fiber groups, scattered with parenchymatous cells, cells containing brown secretions. Epidermis of testa thin-walled, subrectangular, containing reddish-brown masses; inside showing reticulate layer, cells tangentially elongated, with reticulate striations, usually scattered with vascular bundles. Cotyledon cells contain fatty oil droplets and clusters of calcium oxalate.
2. **Powder:** Brown. Fibers mostly in bundles, some cross-overlapping, 10~20 μm in diameter, walls 3~18 μm thick, lignified, with relatively dense pit canals. Lignified cells mostly fusiform, acute, obtusely rounded or truncate at the end, some with one end expended and branched, 66~442 μm in length, 20~39 μm in diameter, walls 3~13 μm thick, lignified, with dense pit canals, some lumina contain yellowish-brown contents; other lignified cells subrectangular, 36~65 μm in diameter, up to about 440 μm in length, walls slightly thickened and lignified, pits mostly cruciate. Reticulate cells of testa subrounded or elliptical, 14~43 μm in diameter, walls slightly thickened and unlignified, with dense subpolygonal reticulate pits. Epidermal cells of testa subrectangular or subpolygonal in surface view, lumen containing reddish-brown masses. Cotyledon cells contain fatty oil droplets, some containing clusters of calcium oxalate, 3~11 μm in diameter.

Thin layer chromatographic identification test (General rule 1010.3):

1. Sample solution: Add 1.0 g of powdered sample to 20 mL of ethyl ether, ultrasonicate for 10 minutes, filter, evaporate the filtrate to dryness, and dissolve the residue in 2 mL of ethyl acetate.
2. Reference drug solution: Use 1.0 g of the reference drug as the same method described above.
3. Procedure: Use silica gel F_{254} as the coating substance and a solution of petroleum ether (30~60 ℃) and ethyl acetate (4:1) as the developing solvent. Apply 1~2 μL of each of the above solutions to the plate. Once the top of the solvent rise to about 5~10 cm from the origin, dry in air. Spray with a 10% solution of sulfuric acid in ethanol (H_2SO_4/EtOH TS) and heat at 105℃ until the spots become visible. The spots in the chromatogram obtained from the sample solution correspond in R_f values and color to the spots in the chromatogram obtained from the reference drug solution.

Impurities and other requirements:

1. Loss on drying: Not more than 15.0% under heating at 105℃ for 5 hours (General rule 5008).
2. Total ash: Not more than 12.0% (General rule 5004).
3. Acid-insoluble ash: Not more than 4.0% (General rule 5004).

Assay:

1. Trigonelline:
   (1) Mobile phase: A solution of acetonitrile and water (80:20). The ratio varies as required.
   (2) Reference standard solution: Weigh accurately a quantity of trigonelline and dissolve in 50% methanol to produce a solution containing 0.1 mg per mL.
   (3) Sample solution: Weigh accurately 0.5 g of powdered sample in a conical flask with stopper, add accurately 20 mL of 50% methanol, weigh, ultrasonicate for 30 minutes, cool, weigh again, replenish the loss of weight with 50% methanol, mix well, filter and use the successive filtrate.
   (4) Chromatographic system: The liquid chromatography is equipped with an ultraviolet absorption photometer (wavelength: 265 nm) and a column packed with amino-bonded silica gel. The number of theoretical plates of the peak of trigonelline should not be less than 4,000.
   (5) Procedure: Inject accurately 10 μL of each of the reference standard solution and the sample solution into the liquid chromatography apparatus, and calculate the content.
2. Water extractives: Carry out the method for determination of water extractives (General rule 5006).

Storage: Store in a ventilated and dry place, and protect from moisture and insects.
Usage: Worm-expelling medicinal.
Dosage: 5~10 g, decocted with water or stir-fried to yellow. Take the number of pills as the age for children and 10~15 pills for adults on an empty stomach.
Precaution and warning: Taking too much immature fruits can cause hiccups.

RAPHANI SEMEN
萊菔子
Lai Fu Zih / Lai Fu Zi
Radish Seed

Radish seed is the dried ripe seed of *Raphanus sativus* L. (Fam. Cruciferae).
It contains not less than 13.0% of dilute ethanol-soluble extractives and not less than 16.0% of water extractives.

Description: Subglobular or subovate, slightly flattened, about 0.3~0.6 cm in length, 0.25~0.3 cm in width. Externally smooth, yellowish-brown, with several longitudinal furrows on one side and a brown, protuberant and dotted hilum at one end. Texture hard, kernel yellowish-white, slightly fleshy, and oily. Odor, slight; taste, slightly pungent.

Microscopic identification:
1. **Transverse section:** The outermost layer was 1 layer of epidermal cells, hypodermis composed of 1 layer of half-moon shaped giant cells with thin walls; inside showing 1 layer of reddish-brown palisade cells, lignified, 10~20 μm in height, about 11 μm in width; inside showing pigment layer, containing reddish-brown contents. Endosperm cells 1 row, flattened. Cotyledon and radical cells contain aleurone grains and fatty oil.
2. **Powder:** Yellowish-brown. Palisade cells of testa flaky, reddish-brown, subpolygonal. Endosperm cells flattened, containing aleurone grains and fatty oil droplets.

Thin layer chromatographic identification test (General rule 1010.3):
1. Sample solution: Add 5.0 g of powdered sample to 50 mL of methanol, heat under reflux for 30 minutes, filter and evaporate the filtrate to 10 mL.
2. Reference drug solution: Use 5.0 g of the reference drug as the same method described above.
3. Procedure: Use silica gel F_{254} as the coating substance and the lower layer of a solution of chloroform, methanol and water (26:14:5) as the developing solvent. Apply 5 μL of each of the above solutions to the plate. Once the top of the solvent rise to about 5~10 cm from the origin, dry in air. Examine under the ultraviolet light at 254 nm. The spots in the chromatogram obtained from the sample solution correspond in R_f values and color to the spots in the chromatogram obtained from the reference drug solution.

Impurities and other requirements:
1. Loss on drying: Not more than 8.0% under heating at 105℃ for 5 hours (General rule 5008).
2. Total ash: Not more than 8.0% (General rule 5004).
3. Acid-insoluble ash: Not more than 4.0% (General rule 5004).

Assay:
1. Water extractives: Carry out the method for determination of water extractives (General rule 5006).
2. Dilute ethanol extractives: Carry out the method for determination of dilute ethanol-soluble extractives (General rule 5006).

Storage: Refrigerate or store in a ventilated and dry place, and protect from mold and insects.
Usage: Disgestant medicinal.
Dosage: 4.5~9 g.

REHMANNIAE RADIX
地黃
Di Huang / Di Huang
Rehmannia Root Tuber

Rehmannia root tuber is the fresh or dried root tuber of *Rehmannia glutinosa* Libosch. (Fam. Scrophulariaceae). The drug is collected in autumn, removed from root stock, fibrous roots and soil, used either in fresh state or baked to almost dry. The former is commonly known as "Xian Di Huang (Fresh rehmannia root tuber)" and the latter is commonly known as "Sheng Di Huang (Unprocessed rehmannia root tuber)".
Sheng Di Huang contains not less than 60.0% of dilute ethanol-soluble extractives, not less than 60.0% of water extractives, not less than 0.20% of catalpol and not less than 0.02% of verbascoside.

Description:
1. Xian Di Huang: Fusiform or cylindrical, 9~15 cm in length, 1~6 cm in diameter. The outer back thin, externally pale reddish-yellow, with curved wrinkles, transverse lenticels and irregularly scars. Texture fleshy, easily broken, fracture pale yellowish-white, scattered with orange-red oil dots, and vessels arranged radially in wood. Odor, slight; taste, slightly sweet and bitter.
2. Sheng Di Huang: Irregular masses or oblong, swollen in the center, slightly tapering at both ends, 6~12 cm in length, 3~6 cm in diameter. Some small, slat-shaped, slightly compressed or twisted. Externally grayish-black or grayish-brown, extremely shrunken, with irregular transverse wavy lines. Texture heavy, soft and tenacious, uneasily broken, fracture grayish-black, brownish-black or

jet-black, lustrous, viscous. Odorless; taste, slightly sweet.

Microscopic identification:

1. **Transverse section:**
   (1) Xian Di Huang: Cork composed of several layers of cells. In the cortex, parenchymatous cells arranged loosely; scattered with many secretory cells, containing orange-yellow oil droplets; occasionally stone cells present. Phloem contains much less quantity of secretory cells. Cambium present in a ring. Xylem rays relatively broad; vessels arranged radially and sparsely.
2. **Powder:**
   (1) Xian Di Huang: Brownish-yellow. Cork cells generally brownish-black. Parenchymatous cells usually contain brown and subrounded nucleiform contents, occasionally prisms of calcium oxalate present. Secretory cells contain orange-yellow oil droplets or orange-yellow granules. Vessels reticulated and bordered-pitted.

Thin layer chromatographic identification test (General rule 1010.3):

1. Sample solution: Add 1.0 g of powdered sample to 50 mL of 80% methanol, ultrasonicate for 30 minutes, filter, evaporate the filtrate to dryness, dissolve the residue in 5 mL of water, extract shaking for four times each with 10 mL of *n*-butanol saturated with water, combine the *n*-butanol extracts, evaporate to dryness, dissolve the residue in 2 mL of methanol.
2. Reference drug solution: Use 1.0 g of the reference drug as the same method described above.
3. Reference standard solution: Weigh accurately a quantity of verbascoside and dissolve in methanol to produce a solution containing 1.0 mg per mL.
4. Procedure: Use silica gel F_{254} as the coating substance and a solution of ethyl acetate, methanol and formic acid (16:0.5:2) as the developing solvent. Apply 5 μL of each of the sample solution and reference drug solution and 2 μL of the reference standard solution to the plate. Once the top of the solvent rise to about 5~10 cm from the origin, dry in air. Spray with a solution of *p*-anisaldehyde in sulfuric acid (*p*-Anisaldehyde/H_2SO_4 TS), heat at 105℃ until the spots become visible. The spots in the chromatogram obtained from the sample solution correspond in R_f values and color to the spots in the chromatogram obtained from the reference drug solution and the reference standard solution.

Impurities and other requirements:

1. Total ash: Not more than 6.0% (General rule 5004).
2. Acid-insoluble ash: Not more than 2.5% (General rule 5004).
3. Total heavy metals: Not more than 10.0 ppm (General rule 3005).
4. Arsenic (As): Not more than 5.0 ppm (General rule 3006, 3049, 3050).

Assay:

1. Catalpol:
   (1) Mobile phase: A solution of acetonitrile and 0.1% phosphoric acid (1:99). The ratio varies as required.
   (2) Reference standard solution: Weigh accurately a quantity of catalpol and dissolve in mobile phase to produce a solution containing 10 μg per mL.
   (3) Sample solution: Cut a quantity of Sheng Dihuang into small pieces (about 5 mm), dry under reduced pressure at 80℃ for 24 hours and grind into coarse powder. Weigh accurately 0.8 g to a conical flask with stopper, add accurately 50 mL of methanol and weigh. Heat under reflux for 1.5 hours, cool and weigh again, replenish the loss of solvent with methanol, mix well and filter. Evaporate accurately 10 mL of the successive filtrate nearly to dryness, dissolve the residue in the mobile phase, transfer to a 10-mL volumetric flask, diluted with the mobile phase to volume and mix well.
   (4) Chromatographic system: The liquid chromatography is equipped with an ultraviolet absorption photometer (wavelength: 210 nm) and a column packed with octadecylsilanized silica gel. The number of theoretical plates of the peak of catalpol should not be less than 5,000.
   (5) Procedure: Inject accurately 10 μL of each of the reference standard solution and the sample solution into the liquid chromatography apparatus, and calculate the content.
2. Verbascoside:
   (1) Mobile phase: A solution of acetonitrile and 0.1% acetic acid (16:84). The ratio varies as required.
   (2) Reference standard solution: Weigh accurately a quantity of verbascoside and dissolve in mobile phase to produce a solution containing 10 μg per mL.
   (3) Sample solution: Weigh accurately 20 mL of the successive filtrate obtained from the sample solution prepared for the assay test of catalpol, evaporate to dryness under reduced pressure. Dissolve the residue in mobile phase and transfer to a 5-mL volumetric flask, add mobile phase to the volume, mix well, filter and use the successive filtrate.
   (4) Chromatographic system: The liquid chromatography is equipped with an ultraviolet absorption photometer (wavelength: 334 nm) and a column packed

with octadecylsilanized silica gel. The number of theoretical plates of the peak of verbascoside should not be less than 5,000.

(5) Procedure: Inject accurately 20 μL of each of the reference standard solution and the sample solution into the liquid chromatography apparatus, and calculate the content.

3. Water extractives: Carry out the method for determination of water extractives (General rule 5006).
4. Dilute ethanol extractives: Carry out the method for determination of dilute ethanol-soluble extractives (General rule 5006).

Storage: Refrigerate or store in a cool and dry place, and protect from mold and insects.
Usage: Heat-clearing medicinal (Heat-clearing and blood-cooling medicinal).
Dosage: 9~30 g.
Precaution and warning: Used with caution in spleen deficiency and diarrhea.

RHAPONTICI RADIX
漏蘆
Lou Lu / Lou Lu
Uniflower Swisscentaury Root

Uniflower swisscentaury root is the dried root of *Rhaponticum uniflorum* (L.) DC. (Fam. Compositae).
It contains not less than 2.0% of dilute ethanol-soluble extractives and not less than 5.0% of water extractives.

Description: Conical or flatted lumps, slightly twisted, usually unbranched, 1~2.5 cm in diameter. Externally dark brown, grayish-brown or blackish-brown, rough, with irregular longitudinal furrows and rhombic and reticulate clefts. Outer bark easily exfoliated. Root stock swollen, with the remains of stems and scaly leaf bases, top with grayish-white pubescences. Texture light and fragile, easily broken. Bark with deep color, wood yellowish-white, arranged radially, ray mostly broken, center with star-shape and brown cleft. Odor, characteristic; taste, slightly bitter.

Microscopic identification:

1. **Transverse section:** Epidermis usually fallen off, metaderm composed of several to 20 or more layers of brown cells, walls slightly thickened, lignified or suberized, elongated-rounded resin canals of fine roots arranged slightly in a ring. Phloem relatively broad, rays wide, phloem bundles and rays scattered with numerous oil cavities. Cambium in a ring. Xylem vessels abundant, arranged in multistrand type, the large vessel groups alternated with the small vessel groups, rays often with radial clefts, occasionally stellate clefts at center surrounded by suberized cells. Parenchyma tissue scattered with oil cavities, surrounded by secretory cells containing yellowish-brown secretions.
2. **Powder:** Brown. Reticulate and bordered-pitted vessels numerous, about 133 μm in diameter. Secretory canals long strip-shaped, 24~68 μm in diameter, containing reddish-brown secretions. Non-glandular hairs of root heads extremely long, lignified, 0.5~4 mm in length, 20~30 μm in diameter. Metaderm cells subsquare or rectangular, wall slightly thickened, reddish-brown, lignified and suberized.

Thin layer chromatographic identification test (General rule 1010.3):

1. Sample solution: Add 1.0 g of powdered sample to 20 mL of methanol, ultrasonicate for 30 minutes, filter, evaporate the filtrate to dryness, and dissolve the residue in 1 mL ethyl acetate.
2. Reference drug solution: Use 1.0 g of the reference drug as the same method described above.
3. Procedure: Use silica gel F_{254} as the coating substance and a solution of cyclohexane and butanone (4:1) as the developing solvent. Apply 10 μL of each of the above solutions to the plate. Once the top of the solvent rise to about 5~10 cm from the origin, dry in air. Examine under the ultraviolet light at 365 nm. The spots in the chromatogram obtained from the sample solution correspond in R_f values and color to the spots in the chromatogram obtained from the reference drug solution.

Impurities and other requirements:

1. Loss on drying: Not more than 15.0% under heating at 105℃ for 5 hours (General rule 5008).
2. Total ash: Not more than 22.0% (General rule 5004).
3. Acid-insoluble ash: Not more than 5.0% (General rule 5004).

Assay:

1. Water extractives: Carry out the method for determination of water extractives (General rule 5006).
2. Dilute ethanol extractives: Carry out the method for determination of dilute ethanol-soluble extractives (General rule 5006).

Storage: Store in a ventilated and dry place.
Usage: Heat-clearing medicinal.
Dosage: 5~9 g.
Precaution and warning: Used with caution in pregnancy.

RHEI RADIX ET RHIZOMA
大黃
Da Huang / Da Huang
Rhubarb

Rhubarb is the dried and peeled root and rhizome of *Rheum palmatum* L., *Rheum tanguticum* Maxim. ex Balf. or *Rheum officinale* Baillon (Fam. Polygonaceae).
It contains not less than 35% of dilute ethanol-soluble extractives and not less than 1.5% of the total amount of aloe-emodin, rhein, emodin, chrysophanol and physcion and should not contain rhaponticin.

Description: Subcylindrical with pores, 5~15 cm in length, 3~10 cm in diameter, or irregular pieces. Externally yellowish-brown, with light colored reticulations, occasionally with brownish-black patches of cork, covered with yellowish-brown powder. Fracture pale reddish-brown, granular, with numerous reddish-brown spots. In the cross-section, cambium annual and xylem arranged radially result in the formation of a wheel. Pith scattered with abnormal vascular bundles, called "Star Spots". The abnormal vascular bundles of *Rheum palmatum* L., 2.5 mm in diameter, arranged in a discontinuous ring; the abnormal vascular bundles of *Rheum officinale* Baill., about 4 mm in diameter, scattered irregularly. Odor, delicately aromatic; taste bitter and slightly astringent.

Microscopic identification:

1. **Transverse section**: Cambium located in external or near external. The inner part of each abnormal vascular bundle presents phloem and outer part presents xylem, cambium located between xylem and phloem result in formation of a ring. The yellowish-brown rays arranged radically by 2~3 rows of parenchymatous cell, containing yellow crystals. Crystalline contents showing insolubility in ethanol, but soluble in water and chloral hydrate (TS), give a result of red in alkaline solution. Parenchymatous cells contain clusters of calcium oxalate and abundant starch granules. Phloem composed of parenchymatous cells, scattered with sieve tube tissues. Xylem unlignified, up to 100 μm width; vessels mainly reticulated, some with spiral vessels, no existence of fibers and stone cells.
2. **Powder:** Orange-yellow or yellowish-brown. Parenchymatous cells abundant. Mostly contain unlignified reticulate vessels, up to 100 μm in diameter and some spiral and annular vessels. The contents seceded from pith cells are mostly yellow non-crystalline masses, soluble in dilute ammonia solution, gives a pink color; gives a dark-red color in potassium hydroxide solution. Clusters of calcium oxalate mostly in fragments, complete ones, 20~200 μm in diameter, mostly as 60~120 μm. Starch granules numerous, simple granules and compound granules, compound composed of 2~5 components, 30 μm in diameter. No existence of cork cells, stone cells and fibers in this sample.

Thin layer chromatographic identification test (General rule 1010.3):

1. Sennoside A:
   (1) Sample solution: Add 2.0 g of powdered sample to 40 mL of a mixture with tetrahydrofuran and water (7:3), shake for 30 minutes, centrifuge. Transfer the supernatant to a separatory funnel, add 13.0 g of sodium chloride, shake for 30 minutes. Separately take the water layer and insoluble sodium chloride, adjust the pH value to 1.5 with 1 N hydrochloric acid, transfer the liquid to the other separatory funnel, add 30 mL of tetrahydrofuran, shake for 10 minutes, take the layer of tetrahydrofuran.
   (2) Reference drug solution: Use 2.0 g of the reference drug as the same method described above.
   (3) Reference standard solution: Weigh accurately a quantity of sennoside A and dissolve in a solution of tetrahydrofuran and water (7:3) to produce a solution containing 1.0 mg per 4 mL.
   (4) Procedure: Use silica gel F_{254} as the coating substance and a solution of ethyl acetate, *n*-butanol, water and glacial acetic acid (40:40:30:1) as the developing solvent. Apply 20 μL of each of the sample solution and reference drug solution and 5 μL of the reference standard solution to the plate. Once the top of the solvent rise to about 5~10 cm from the origin, dry in air. Examine under ultraviolet light at 365 nm. The spots in the chromatogram obtained from the sample solution correspond in R_f values and color to the spots in the chromatogram obtained from the reference drug solution and the reference standard solution.
2. Rhein:
   (1) Sample solution: Add 1.0 g of powdered sample to 10 mL of methanol, ultrasonicate for 30 minutes, filter, and use the filtrate.
   (2) Reference drug solution: Use 1.0 g of the reference drug as the same method described above.
   (3) Reference standard solution: Weigh accurately a quantity of rhein and dissolve in methanol to produce a solution containing 1.0 mg per mL.
   (4) Procedure: Use silica gel F_{254} as the coating substance and the supernatant of petroleum ether (30~60℃), ethyl acetate, and formic acid (15:5:1) as the developing solvent. Apply 1 μL of each of the above solutions to the plate. Once the top of the solvent rise to about 5~10 cm from the origin, dry in air. Examine under ultraviolet light at 365 nm.

The spots in the chromatogram obtained from the sample solution correspond in R_f values and color to the spots in the chromatogram obtained from the reference drug solution and the reference standard solution.

Impurities and other requirements:

1. Acid-insoluble ash: Not more than 1.0% (General rule 5004).
2. Foreign matter: Not more than 1.0% (General rule 5003).
3. Rhaponticin:
   (1) Sample solution: Add 0.5 g of powdered sample to 10 mL of ethanol, heat on the reflux for 10 minutes, filter and use the filtrate.
   (2) Procedure: Carry out the method for thin layer chromatography (General rule 1010.3), use silica gel F_{254} as the coating substance and a solution of isopropyl ether, *n*-butanol, and methanol (26:7:7) as the developing solvent. Apply 10 µL of the sample solution to the plate. Once the top of the solvent rise to about 5~10 cm from the origin, dry in air. Examine under ultraviolet light at 365 nm. Usually the blue-white fluorescence is present when R_f value between 0.3 to 0.6, but the bluish violet fluorescence should not be present.
4. Total heavy metals: Not more than 10.0 ppm (General rule 3005).
5. Arsenic (As): Not more than 5.0 ppm (General rule 3006, 3049, 3050).

Assay:

1. Aloe-emodin, rhein, emodin, chrysophanol and physcion:
   (1) Mobile phase: A solution of methanol and 0.1% phosphoric acid (85:15). The ratio varies as required.
   (2) Reference standard solution: Weigh accurately a quantity of aloe-emodin, rhein, emodin, chrysophanol, and physcion and dissolve in methanol to produce a solution containing 80 µg per mL of each of aloe-emodin, rhein, emodin, chrysophanol and 40 µg per mL of physcion. Measure accurately 2 mL of each above, and mix well (a mixture containing 16 µg of each of aloe-emodin, rhein, emodin, chrysophanol and 8 µg of physcion per mL).
   (3) Sample solution: Weigh accurately 0.15 g of powdered sample, transfer to a conical flask with stopper, add accurately 25 mL of methanol and weigh, heat under reflux for 1 hour, cool, and weigh again, replenish the loss of solvent with methanol, shake well and filter. Measure accurately 5 mL of successive filtrate, remove the solvent, add 10 mL of 8% hydrochloric acid, ultrasonicate for 2 minutes, add 10 mL of chloroform, heat under reflux for 1 hour, cool, transfer a separating funnel, wash the flask with a small quantity of chloroform and combine the washings to the separating funnel. Separate the chloroform layer, extract the acid solution again for three times, each time with 10 mL of chloroform, combine the chloroform extracts and recover in methanol and transfer to a 10-mL volumetric flask, add methanol to volume and mix well. Filter and use the successive filtrate.
   (4) Chromatographic system: The liquid chromatography is equipped with an ultraviolet absorption photometer (wavelength: 254 nm) and a column packed with octadecylsilanized silica gel. The number of theoretical plates of the peak of emodin should not be less than 3,000.
   (5) Procedure: Inject accurately 10 µL of each of the reference standard solution and the sample solution into the liquid chromatography apparatus, and calculate the content.
2. Dilute ethanol extractives: Carry out the method for determination of dilute ethanol-soluble extractives (General rule 5006).

Storage: Preserve in a light-resistant and well-closed container.
Usage: Purgative medicinal.
Dosage: 0.2~1 g.

ROSAE LAEVIGATAE FRUCTUS
金櫻子
Jin Ying Zih / Jin Ying Zi
Cherokee Rose Fruit

Cherokee rose fruit is the dried ripe fruit of *Rosa laevigata* Michx. (Fam. Rosaceae).
It contains not less than 36.0% of dilute ethanol-soluble extractives and not less than 34.0% of water extractives.

Description: Pseudocarp developed from receptacle, obovate, vase-shaped, 2~4 cm in length, 1~2 cm in diameter in the center. Externally dark red or reddish-brown, slightly lustrous, with a dish-like persistent calyx at the apex, swollen in the middle and the lower part gradually tapered, with bristles or protuberant brown small scars of the fallen bristles. Texture hard, fracture dark yellow, receptacle about 1.5 mm thick, with white or pale yellow tomenta, lustrous, composed of 30~50 yellow and hard nuts, fusiform, with 3~5 edges and longitudinal groove. Odor, slightly sour; taste, sweet and slightly astringent.

Microscopic identification:

1. **Transverse section:**
   (1) Receptacle wall: Outer epidermis 1 row, covered with about 7 μm thick cuticle, cells subsquare, filled with brown contents. Parenchymatous cells of endodermis subrounded or polygonal, walls slightly thickened and lignified. Non-glandular hairs or their remains occasionally visible. Collateral vascular bundles scattered, phloem fine, with fiber bundles locate outside the phloem, vessels scattered or radially arranged.
2. **Powder:** Reddish-brown. Epidermal cells polygonal, walls thickened, with distinct pits and cell boundaries, containing reddish-brown contents. Parenchymatous cells oblong or polygonal, walls slightly thickened and lignified, with distinct pits. Non-glandular hairs unicellular or multicellular, walls thickened and slightly lignified, 500~1800 μm in length, 15~30 μm in diameter. Fiber bundles fusiform or strip-shaped, walls lignified with distinct pits, 15~25 μm in diameter. Vessels spiral, reticulated, pitted and annular, mainly spiral, 7~20 μm in diameter. Prisms of calcium oxalate squared or irregular in shape, 15~40 μm in diameter; clusters of calcium oxalate 25~60 μm in diameter, relatively rare. Pigments yellow or yellowish-brown, irregular in shape.

Thin layer chromatographic identification test (General rule 1010.3):

1. Sample solution: Add 2.0 g of powdered sample to 30 mL of ethanol, ultrasonicate for 30 minutes, filter, evaporate the filtrate to dryness, dissolve the residue in 20 mL of water, extract shaking twice each with 30 mL of ethyl acetate, combine the ethyl acetate extracts, evaporate to dryness, dissolve the residue in 2 mL of methanol.
2. Reference drug solution: Use 2.0 g of the reference drug as the same method described above.
3. Procedure: Use silica gel F_{254} as the coating substance and a solution of ethyl acetate, methanol and water (9:0.8:0.6) as the developing solvent. Apply 10 μL of each of the above solutions to the plate. Once the top of the solvent rise to about 5~10 cm from the origin, dry in air. Spray with a 10% solution of sulfuric acid in ethanol (H_2SO_4/EtOH TS), heat at 105℃ for 3 minutes, and examine under visible light. The spots in the chromatogram obtained from the sample solution correspond in R_f values and color to the spots in the chromatogram obtained from the reference drug solution.

Impurities and other requirements:

1. Total ash: Not more than 6.0% (General rule 5004).
2. Acid-insoluble ash: Not more than 1.0% (General rule 5004).

Assay:

1. Water extractives: Carry out the method for determination of water extractives (General rule 5006).
2. Dilute ethanol extractives: Carry out the method for determination of dilute ethanol-soluble extractives (General rule 5006).

Storage: Store in a cool and dry place, and protect from moisture.
Usage: Astringent medicinal.
Dosage: 6~12 g.

RUBI FRUCTUS
覆盆子
Fu Pen Zih / Fu Pen Zi
Palmleaf Raspberry Fruit

Palmleaf raspberry fruit is the dried immature fruit of *Rubus chingii* Hu (Fam. Rosaceae).
It contains not less than 7.0% of dilute ethanol-soluble extractives and not less than 7.0% of water extractives.

Description: Aggregate fruit consisting of numerous small drupes, conical, flattened-conical or spheroidal, 4~9 mm in diameter, 5~12 mm in height. Externally grayish-green with grayish-white pubescences. Apex obtuse; base flattened, with brown involucre; involucre 5-lobed, the upper part covered with brown pubescences, the lower part with fruit stalks, stalk fragile and easily fallen. Drupelets easily fallen, with 3 ridges, lunate, dorsal surface densely covered with grayish-white pubescences, reticulate striations distinct on both side, containing 1 brown seed. Odor, aromatic; taste, sweet and slightly sour.

Microscopic identification:

1. **Transverse section:**
   (1) Aggregate Fruit: Receptacle rounded, surrounded with numerous drupelets.
   (2) Drupelet: Exocarp composed of 1 layer of arranging neatly parenchymatous cells, elongated tangentially, the apical cells usually differentiated into unicellular non-glandular hairs, with scars remained of hairs. Mesocarp composed of 3~5 layers of oblong parenchymatous cells, some containing clusters of calcium oxalate. Endocarp relatively thick, with ridge-shaped protuberance, outer part composed of several layers of thickened cells, walls lignified, the outermost layer with relatively small cells, arranged neatly, inner part composed of several layers of fibers, horizontally lay or obliquely alternated. The outermost layer of testa composed of 1 layer of parenchymatous cells, tangentially elongated, lumen filled with brown pigments; inside showing 1~2 layers of compressed parenchymatous cells.

Endosperm and cotyledons with thin walls, containing aleurone grains and fatty oil.

2. **Powder:** Pale brownish-yellow. Non-glandular hairs usually unicellular, cell walls extremely thickened and lignified, lumen indistinct, walls usually with spiral striations, the shape like stone cell, 80~400 μm in length, 10~20 μm in diameter. Epidermal cells of pericarp flaky, polygonal in surface view, scattered with single stone cells, subrounded, 10~25 μm in diameter. Fibers of pericarp in groups, arranged longitudinally or obliquely in crisscross pattern, 180~250 μm in length, 10~25 μm in diameter. Clusters of calcium oxalate usually visible, 20~50 μm in diameter.

Impurities and other requirements:
1. Loss on drying: Not more than 15.0% under heating at 105℃ for 5 hours (General rule 5008).
2. Total ash: Not more than 7.0% (General rule 5004).
3. Acid-insoluble ash: Not more than 2.0% (General rule 5004).

Assay:
1. Water extractives: Carry out the method for determination of water extractives (General rule 5006).
2. Dilute ethanol extractives: Carry out the method for determination of dilute ethanol-soluble extractives (General rule 5006).

Storage: Store in a ventilated and dry place, and protect from insects.
Usage: Astringent medicinal.
Dosage: 6~12 g.

RUBIAE RADIX ET RHIZOMA
茜草
Cian Cao / Qian Cao
India Madder Root and Rhizome

India madder root and rhizome is the dried root and rhizome of *Rubia cordifolia* L. (Fam. Rubiaceae).
It contains not less than 6.0% of dilute ethanol-soluble extractives, not less than 6.0% of water extractives and not less than 0.4% of rubimaillin.

Description: Rhizomes nodular, 2~3 cm in length, the upper with stem bases, the lower with numerous fascicled roots. Roots slender cylindrical, undulate curved or occasionally branched, 10~20 cm in length, 1~4 mm in diameter; externally brownish-red or purplish-red, with fine longitudinal wrinkles and a few transverse furrows, occasionally bark exfoliated and exposed pink wood. Texture hard and fragile, fracture pale red. Odor, slight; taste, slightly bitter and with reddish saliva on chewing.

Microscopic identification:
1. **Transverse section:**
   (1) Root: Cork composed of over 10 layers of cork cells. Cortex relatively narrow, cells elongated tangentially, mostly shrunken. Phloem cells relatively small, scattered with numerous raphides of calcium oxalate arranged axially. Cambium in a ring. Xylem vessels mostly singly scattered, distributed irregularly. Rays indistinct.
2. **Powder:** Grayish-brown. Cork cells polygonal to irregular, wall thick, containing brown contents. Raphides of calcium oxalate numerous, scattered singly or in bundles, 18~97 μm in length; bright polychromatic under the polarized microscope. Fibers colorless, slender, slightly curved. Vessels scattered singly or in bundles, mostly bordered-pitted and few spiral, 4~84 μm in diameter. Tracheids numerous, mostly in bundles, wall slightly thick with distinct puts.

Thin layer chromatographic identification test (General rule 1010.3):
1. Sample solution: Add 0.5 g of powdered sample to 10 mL of methanol, shake for 5 minutes, stand, filter and use the filtrate.
2. Reference drug solution: Use 0.5 g of the reference drug as the same method described above.
3. Procedure: Use silica gel F_{254} as the coating substance and a solution of petroleum ether (30~60 ℃) and acetone (4:1) as the developing solvent. Apply 5 μL of each of the above solutions to the plate. Once the top of the solvent rise to about 5~10 cm from the origin, dry in air. Examine under the ultraviolet light at 365 nm. The spots in the chromatogram obtained from the sample solution correspond in R_f values and color to the spots in the chromatogram obtained from the reference drug solution.

Impurities and other requirements:
1. Loss on drying: Not more than 15.0% under heating at 105℃ for 5 hours (General rule 5008).
2. Total ash: Not more than 16.0% (General rule 5004).
3. Acid-insoluble ash: Not more than 6.0% (General rule 5004).

Assay:
1. Rubimaillin:
   (1) Mobile phase: A 1,000 mL solution of acetonitrile and 0.03% phosphoric acid (4:1). The ratio varies as required.
   (2) Reference standard solution: Weigh accurately 2 mg of rubimaillin and dissolve in methanol to produce a 25 mL solution containing 80 μg per mL.
   (3) Sample solution: Weigh accurately 200 mg of the powdered sample, add 20 mL of methanol, ultrasonicate for 30 minutes, cool.

Add methanol to 25 mL, mix well, filter and use the filtrate.

(4) Chromatographic system: The liquid chromatography is equipped with an ultraviolet absorption photometer (wavelength: 250 nm) and a column packed with octadecylsilanized silica gel.

(5) Procedure: Inject accurately 10 μL of each of the reference standard solution and the sample solution into the liquid chromatography apparatus, and calculate the content.

2. Water extractives: Carry out the method for determination of water extractives (General rule 5006).
3. Dilute ethanol extractives: Carry out the method for determination of dilute ethanol-soluble extractives (General rule 5006).

Storage: Store in a ventilated and dry place, and protect from mold.
Usage: Blood-regulating medicinal (Hemostatic medicinal).
Dosage: 6~9 g

SALVIAE MILTIORRHIZAE RADIX ET RHIZOMA
丹參
Dan Shen / Dan Shen
Red Sage Root and Rhizome

Red sage root and rhizome is the dried root and rhizome of *Salvia miltiorrhiza* Bge. (Fam. Labiatae).
It contains not less than 46.0% of dilute ethanol-soluble extractives, not less than 50.0% of water extractives and not less than 0.2% of tanshinone II_A.

Description: Rhizomes short and stout, occasionally apex remained with stem base. Roots several, long cylindrical, slightly curved, some branched and with fibrous rootlets, 10~20 cm in length, 0.3~1 cm in diameter. Externally brownish-red or dark brownish-red, rough, longitudinally wrinkled. The bark of old roots loose, mostly purplish-brown, easily exfoliated to scaly. Texture hard and fragile, fracture loose, with clefts or slightly even and dense, bark brownish-red bark, wood grayish-yellow or purplish-brown, with yellowish-white vessels bundles arranged radially. Odor, slight; taste, slightly bitter and astringent. Cultivated form relatively stout, 0.5~1.5 cm in diameter, externally reddish-brown, longitudinally wrinkled, the bark closely adhering to wood and uneasily exfoliated, texture compact, fracture relatively even, slight horny.

Microscopic identification:

1. **Transverse section:** Cork composed of several layers of cells with orange or pale purplish-brown contents, occasionally with rhytidome tissue. Cortex broad and phloem narrow, sieve tube groups obvious, the shedding ones strip-shaped. Cambium arranged in a ring. Xylem extremely broad, vessels occurring near the cambium ring and gradually reduced near the central part of xylem, usually several tangentially connected, arranged alternately with parenchymatous cells of xylem arranged in layer. Xylem fibers accompany with vessels.
2. **Powder:** Reddish-brown. Stone cells mostly singly scattered or paired, subrounded, subrectangular, subfusiform or irregular, edge uneven, 20~65 μm in diameter, up to 257 μm long, the wall 5~16 μm thick, occasionally contain brown contents. Reticulate and bordered-pitted vessels 10~50 μm in diameter; reticulate vessel elements long-fusiform, acuminate or truncate at the end, with irregular thickened walls, pits narrow and thin, perforations in lateral walls. Xylem fibers usually in bundles, long fusiform, acuminate at the end, 18~25 μm in diameter, the wall 2~4 μm thick, pits oblique cleft-shaped or cruciate, pit canals sparse. Cork cells yellowish-brown, subsquare or polygonal in surface view, the wall slightly thickened, curved or straight, containing reddish-brown pigments, the pigments are dissolved after chloral hydrate solution is permeabilized.

Thin layer chromatographic identification test (General rule 1010.3):

1. Sample solution: Add 1.0 g of powdered sample to 5 mL of ethyl ether, shake for 1 hour, stand and filter, evaporate the filtrate to dryness, the residue add 1 mL of ethyl acetate.
2. Reference drug solution: Use 1.0 g of the reference drug as the same method described above.
3. Reference standard solution: Weigh accurately a quantity of tanshinone II_A and dissolve in ethyl acetate to produce a solution containing 2.0 mg per mL.
4. Procedure: Use silica gel F_{254} as the coating substance and a solution of petroleum ether (30~60 ℃) and ethyl acetate (4:1) as the developing solvent. Apply 5 μL of each of the above solutions to the plate. Once the top of the solvent rise to about 5~10 cm from the origin, dry in air. Examine under ultraviolet light at 254 nm. The spots in the chromatogram obtained from the sample solution correspond in R_f values and color to the spots in the chromatogram obtained from the reference drug solution and reference standard solution.

Impurities and other requirements:

1. Loss on drying: Not more than 15.0% under heating at 105℃ for 5 hours (General rule 5008).
2. Total ash: Not more than 10.0% (General rule 5004).
3. Acid-insoluble ash: Not more than 3.0% (General rule 5004).
4. Cadmium (Cd): Not more than 0.3 ppm (General rule 3049, 3050).

5. Lead (Pb): Not more than 5.0 ppm (General rule 3007, 3049, 3050).
6. Mercury (Hg): Not more than 0.2 ppm (General rule 3049).
7. Arsenic (As): Not more than 2.0 ppm (General rule 3006, 3049, 3050).
8. Copper (Cu): Not more than 20.0 ppm (General rule 3049).

Assay:

1. Tanshinone II_A:
   (1) Mobile phase: A solution of methanol and water (75:25). The ratio varies as required.
   (2) Reference standard solution: Place tanshinone II_A in a high humidity device with the bottom contenting water more than 12 hours for 1 hour, transfer to a silicone dryer, dry at 60℃ for 1 hour. Weigh accurately 1.0 mg and dissolve in 10 mL of methanol to produce a solution containing 0.1 mg per mL.
   (3) Sample solution: Weigh accurately 1.0 g of powdered sample, add 30 mL of 70% methanol, ultrasonicate for 30 minutes, centrifugal filtration. The residue add 70% methanol again and operate twice as above. Combine all filtrates and add 70% methanol and make the solution to 100 mL, mix well.
   (4) Chromatographic system: The liquid chromatography is equipped with an ultraviolet absorption photometer (wavelength: 270 nm) and a column (4~6 mm × 15~25 cm) packed with octadecylsilanized silica gel (5~10 μm in particle diameter). The column temperature is maintained at room temperature. Inject reference standard solution into the liquid chromatography apparatus for five times, and record the peak areas. The relative standard deviation of the peak area of tanshinone II should not be more than 1.5%.
   (5) Procedure: Inject accurately 5 μL of each of the reference standard solution and the sample solution into the liquid chromatography apparatus, and calculate the content.
2. Water extractives: Carry out the method for determination of water extractives (General rule 5006).
3. Dilute ethanol extractives: Carry out the method for determination of dilute ethanol-soluble extractives (General rule 5006).

Storage: Refrigerate or store in a cool and dry place, and protect from insects.
Usage: Blood-regulating medicinal (Blood-activating and stasis-dispelling medicinal).
Dosage: 9~15 g.

SANGUISORBAE RADIX
地榆
Di Yu / Di Yu
Great Burnet Root

Great burnet root is the dried root of *Sanguisorba officinalis* L. or *Sanguisorba officinalis* L. var. *longifolia* (Bert.) Yu et Li (Fam. Rosaceae).
It contains not less than 17.0% of dilute ethanol-soluble extractives, not less than 15.0% of water extractives, not less than 10.0% of tannins and not less than 1.0% of gallic acid.

Description:

1. Root of *Sanguisorba officinalis*: Cylindrical, slightly curved or twisted, 5~21 cm in length, 0.5~2 cm in diameter. Externally brown, rough, with longitudinal wrinkles, occasionally with lateral root or scars, root stock relatively thick, with stalk and petiole residues. Texture hard and fragile, fracture relatively even, slight starchy, pale yellow in bark, brownish-yellow or pink in wood, with radially striations. Odor, slights; taste, slightly bitter and astringent.
2. Root of *Sanguisorba officinalis* var. *longifolia*: Roots cylindrical or conical, curved or twisted, up to 20 cm in length, 0.6~2 cm in diameter. Externally reddish-brown or brownish-purple, with fine longitudinal wrinkles and transverse furrows. Texture hard and tenacious, uneasily broken, fracture distinct fibrous, cambium ring indistinct, yellow in bark, pale yellow in wood, with indistinct radial striations. Odor, slight; taste, slightly bitter and astringent.

Microscopic identification:

1. **Transverse section:**
   (1) Root of *Sanguisorba officinalis*: In phloem, fibers singly scattered, walls lignified; xylem fibers infrequent.
   (2) Root of *Sanguisorba officinalis* var. *longifolia*: Cork composed of several layers of brown cork cells. Cortex composed of 2~3 layers of oblong cells, elongated tangentially. Phloem broad, fibers numerous, singly scattered or several in bundles, walls unlignified; with many clefts at the outer Cambium in a ring. Xylem rays broad; xylem fiber bundles relatively more, surrounding vessels. Parenchymatous tissue filled with clusters of calcium oxalate and starch granules.
2. **Powder:** Yellowish-brown to brown. Cork cells brownish-yellow, subrectangular, lumen occasionally contains yellow contents. Phloem fibers singly scattered or few in bundles, slender and curved, 10~30 μm in length. Starch granules abundant, suboblong, subpolygonal or irregular. Vessels mainly bordered-pitted, reticulate also

present rarely. Clusters and prisms of calcium oxalate also present.

Thin layer chromatographic identification test (General rule 1010.3):

1. Sample solution: Add 2.0 g of powdered sample to 30 mL of a 10% solution of hydrochloric acid in 50% methanol, heat under reflux for 2 hours, cool and filter. Extract the filtrate twice each time with 25 mL of ethyl ether, combine the ethyl ether extracts, evaporate to dryness, and dissolve the residue in 1 mL of methanol.
2. Reference drug solution: Use 2.0 g of the reference drug as the same method described above.
3. Reference standard solution: Weigh accurately a quantity of gallic acid and dissolve in methanol to produce a solution containing 0.5 mg per mL.
4. Procedure: Use silica gel F_{254} as the coating substance and a solution of toluene (saturated with water), ethyl acetate and formic acid (6:3:1) as the developing solvent. Apply 5~10 μL of each of the sample solution and reference drug solution and 5 μL of the reference standard solution to the plate. Once the top of the solvent rise to about 5~10 cm from the origin, dry in air. Spray with a 1% solution of ferric chloride in ethanol ($FeCl_3$/EtOH TS). The spots in the chromatogram obtained from the sample solution correspond in R_f values and color to the spots in the chromatogram obtained from the reference drug solution and the reference standard solution.

Impurities and other requirements:

1. Loss on drying: Not more than 12.0% under heating at 105℃ for 5 hours (General rule 5008).
2. Total ash: Not more than 10.0% (General rule 5004).
3. Acid-insoluble ash: Not more than 2.0% (General rule 5004).

Assay:

1. Gallic acid:
   (1) Mobile phase: A solution of methanol and 0.05% phosphoric acid (5:95). The ratio varies as required.
   (2) Reference standard solution: Weigh accurately a quantity of gallic acid and dissolve in water to produce a solution containing 30 μg per mL.
   (3) Sample solution: Weigh accurately 0.2 g of powdered sample in a conical flask with stopper, add 10 mL of 10% solution of hydrochloric acid, heat under reflux for 3 hours, cool and filter to a 100-mL volumetric flask, wash the container and the residue with a quantity of water for several times, combine the washings to the same volumetric flask, add water to the volume, mix well, filter and use the successive filtrate.
   (4) Chromatographic system: The liquid chromatography is equipped with an ultraviolet absorption photometer (wavelength: 272 nm) and a column packed with octadecylsilanized silica gel. The number of theoretical plates of the peak of gallic acid should not be less than 2,000.
   (5) Procedure: Inject accurately 10 μL of each of the reference standard solution and the sample solution into the liquid chromatography apparatus, and calculate the content.
2. Water extractives: Carry out the method for determination of water extractives (General rule 5006).
3. Dilute ethanol extractives: Carry out the method for determination of dilute ethanol-soluble extractives (General rule 5006).
4. Tannins:
   (1) Sample solution: Weigh accurately 10.0 g of powdered sample (containing about 1.0 g tannins), transfer to a conical flask, add 150 mL of water, place in a water bath for 30 minutes, cool and transfer to 250-mL volumetric flask, add water to volume, filter and use the filtrate.
   (2) Determination of total water soluble portion: Weigh accurately 25 mL of the sample solution, evaporate to dryness, take the residue under heating at 105℃ for 3 hours, weighed (T_1).
   (3) Determination of water soluble portion not combining with gelatin powder: Weigh accurately 100 mL of the sample solution, add 6.0 g of gelatin powder, shake for 15 minutes, filter, weigh accurately 25 mL of the filtrate, evaporate to dryness, take the residue under heating at 105℃ for 3 hours, weighed (T_2).
   (4) Determination of water soluble portion combining with gelatin powder: Weigh accurately 100 mL of water, add 6.0 g of gelatin powder, shake for 15 minutes, filter, weigh accurately 25 mL of the filtrate, evaporate to dryness, take the residue under heating at 105℃ for 3 hours, weighed (T_0).
   (5) Calculate the content of tannins as following formula:

$$\text{Content of tannins (\%)} = \frac{(T_1 - T_2 + T_0) \times 10}{W} \times 100$$

W is the weight of the sample taken (g).

Storage: Store in a ventilated and dry place, and protect from insects.

Usage: Blood-regulating medicinal (Hemostatic medicinal).

Dosage: 9~15 g.

SAPOSHNIKOVIAE RADIX
防風
Fang Fong / Fang Feng
Saposhnikovia Root

Saposhnikovia root is the dried root of *Saposhnikovia divaricata* (Turcz.) Schischk. (Fam. Umbelliferae), commonly known as "Guan Fang Feng".
It contains not less than 20.0% of dilute ethanol-soluble extractives and not less than 18.0% of water extractives.

Description: Long conical or long cylindrical, gradually tapering towards the lower part, some slightly curved, 15~30 cm in length, 0.5~2 cm in diameter. Root stock 2~13 cm in length, with obvious dense annulations, commonly known as "Chiou Yin Tou", some annulations marked by brown hair-like remains of leaf bases. Externally grayish-brown, rough, with in longitudinal wrinkles, numerous transverse-elongated lenticels and dotted protuberant of rootlet scars. Texture light and loose, easily broken, fracture uneven, bark pale brownish and cracked, commonly known as "Jiu Hua Shin", scattered with yellowish-brown and tiny oil spots (secretory duct), wood pale yellowish, relatively thick one with a crack in the pith. Odor, characteristic; taste, sweetish and astringent.

Microscopic identification:

1. **Transverse section:** Cork composed of several layers of cells, phelloderm narrow. Cortex with relatively large elliptical vittae. Phloem relatively broad, scattered with numerous subrounded vittae surrounded by 4~8 secretory cells, golden-yellow secretions visible in vittae; phloem rays curved and becoming cleft in the outer part. Cambium distinct. Xylem vessels extremely abundant, arranged radially. Pith present at the center of root stock. A few stone cells scattered in the parenchymatous tissue.
2. **Powder:** Yellowish-brown. Vittae mostly broken, filled with golden-yellow, yellowish-brown or greenish-yellow strip-shaped secretions, wide or slender, 10~112 μm in diameter, surrounded by slender and shrunken parenchymatous cells, with indistinct cell boundaries. Reticulate vessels 14~103 μm in diameter, spiral, bordered-pitted or reticulate bordered-pitted vessels occasionally visible. Cork cells polygonal or subrectangular in surface view; rectangular in sectional view, walls curved and undulated, occasionally with short strip-shaped thickness. Fibers of leaf base mostly slender, 4~13 μm in diameter, walls extremely thickened, lumina narrow and fine. Parenchymatous cells of phloem mostly shrunken, some cells elongated, 5~18 μm in diameter, extremely fine oblique crossed striations faintly present.

Thin layer chromatographic identification test (General rule 1010.3):

1. Sample solution: Add 1.0 g of powdered sample to 10 mL of methanol, ultrasonicate for 30 minutes, filter and use the filtrate.
2. Reference drug solution: Use 1.0 g of the reference drug as the same method described above.
3. Procedure: Use silica gel F_{254} as the coating substance and a solution of ethyl acetate, methanol and water (10:2:1) as the developing solvent. Apply 10 μL of each of the above solutions to the plate. Once the top of the solvent rise to about 5~10 cm from the origin, dry in air. Examine under the ultraviolet light at 365 nm. The spots in the chromatogram obtained from the sample solution correspond in R_f values and color to the spots in the chromatogram obtained from the reference drug solution.

Impurities and other requirements:

1. Loss on drying: Not more than 10.0% under heating at 105℃ for 5 hours (General rule 5008).
2. Total ash: Not more than 7.0% (General rule 5004).
3. Acid-insoluble ash: Not more than 2.0% (General rule 5004).
4. Total heavy metals: Not more than 10.0 ppm (General rule 3005).
5. Arsenic (As): Not more than 5.0 ppm (General rule 3006, 3049, 3050).

Assay:

1. Water extractives: Carry out the method for determination of water extractives (General rule 5006).
2. Dilute ethanol extractives: Carry out the method for determination of dilute ethanol-soluble extractives (General rule 5006).

Storage: Refrigerate or store in a cool and dry place, and protect from insects.
Usage: Exterior-releasing medicinal (Wind-cold dispersing medicinal).
Dosage: 4.5~10 g.

SAPPAN LIGNUM
蘇木
Su Mu / Su Mu
Sappan Wood

Sappan wood is the dried heart wood of *Caesalpinia sappan* L. (Fam. Leguminosae).
It contains not less than 3.0% of dilute ethanol-soluble extractives.

Description: Long-cylindrical, 10~100 cm in length, 3~12 cm in diameter. Externally reddish-yellow or brownish-yellow, with longitudinally brown striations and traces of knife cutting. Texture compact and hard,

fracture reddish-yellow, rays slender and arranged densely, pale color, pith lax in the center. Odorless; taste, slightly astringent.

Microscopic identification:

1. **Transverse section:** Rays broad, 1~2 layers of cells wide. Vessels subrounded, about to 160 μm in diameter, usually containing yellowish-brown or reddish-brown contents. Xylem fibers polygonal, with extremely thickened walls. Xylem parenchymatous cells with walls thickened and lignified, some containing prisms of calcium oxalate. Parenchymatous cells of pith irregular polygonal, varying in size, walls slightly lignified, with pits.
2. **Powder:** Yellowish-red. Xylem fibers slender, 9~22 μm in diameter, walls thickened or slightly thickened, with sparse oblique pits, lumen linear or slightly wide. Some fiber bundles surrounded by cells containing prisms of calcium oxalate, forming crystal fibers; crystal-containing cells with unevenly thickened and lignified walls; prism crystals about to 17 μm in length. Xylem ray cells rectangular on the radial section, walls moniliform thickened and lignified, with single pits; rays 1~3 rows of cells wide on the tangentially longitudinal section, about to 62 cells high, pits distinct. Bordered-pitted vessels varying in size, large ones about to 160 μm in diameter, usually containing brown contents in clumps. Xylem parenchymatous cells normally longer and larger than ray cells, walls slightly thickened and lignified, pits distinct. Prisms of calcium oxalate and brown masses also visible.

Thin layer chromatographic identification test (General rule 1010.3):

1. Sample solution: Add 1.0 g of powdered sample to 10 mL of methanol, ultrasonicate for 30 minutes, filter and use the filtrate.
2. Reference drug solution: Use 1.0 g of the reference drug as the same method described above.
3. Reference standard solution: Weigh accurately a quantity of brazilin and dissolve in methanol to produce a solution containing 1.0 mg per mL.
4. Procedure: Use silica gel F_{254} as the coating substance and a solution of chloroform, acetone and formic acid (8:4:1) as the developing solvent. Apply 2 μL of each of the above solutions to the plate. Once the top of the solvent rise to about 5~10 cm from the origin, dry in air. Place the plate in a dryer for more than 12 hours. Examine under the ultraviolet light at 254 nm. The spots in the chromatogram obtained from the sample solution correspond in R_f values and color to the spots in the chromatogram obtained from the reference drug solution and the reference standard solution.

Impurities and other requirements:

1. Loss on drying: Not more than 12.0% under heating at 105℃ for 5 hours (General rule 5008).
2. Total ash: Not more than 5.0% (General rule 5004).
3. Acid-insoluble ash: Not more than 2.0% (General rule 5004).

Assay:

1. Dilute ethanol extractives: Carry out the method for determination of dilute ethanol-soluble extractives (General rule 5006).

Storage: Store in a ventilated and dry place.
Usage: Blood-regulating medicinal (Blood-activating and stasis-dispelling medicinal).
Dosage: 3~10 g.
Precaution and warning: Used with caution in blood deficiency without stasis and pregnancy.

SCHISANDRAE FRUCTUS
五味子
Wu Wei Zih / Wu Wei Zi
Schisandra Fruit

Schisandra fruit is the dried ripe fruit of *Schisandra chinensis* (Turcz.) Baill. or *Schisandra sphenanthera* Rehd. et Wils. (Fam. Magnoliaceae). The former is called "Bai Wu Wei Zi", and the latter is called "Nan Wu Wei Zi".
It contains not less than 24.0% of dilute ethanol-soluble extractives, not less than 30.0% of water extractives and not less than 0.4% of schizandrin.

Description:

1. Bei Wu Wei Zi: Irrgularly spheroidal or compressed-spheroidal, 5~8 mm in diameter. Externally red, purplish-red or dark red, shrunken, oily, sarcocarp soft, occasionally externally blackish-red or covered with white powder. Seeds 1~2, reinform, externally brownish-yellow, lustrous, testa thin and fragile. Odor of sarcocarp, slightly; taste of sarcocarp, sour. Odor of seeds, aromatic on crushing; taste of seeds, pungent and slighly bitter.
2. Nan Wu Wei Zi: Relatively small. Externally brownish-red to dark brown, shriveled, shrunken, sarcocarp often closely adhering to the seeds.

Microscopic identification:

1. **Transverse section:** Exocarp composed of 1 layer of square or rectangular epidermal cells, walls slightly thickened, covered with cuticle, scattered with oil cells scattered. Mesocarp parenchymatous cells composed of more than 10 layers of cells, containing scattered starch granules, with small collateral vascular bundles. Endocarp composed of 1 layer of small, square parenchymatous cells. The outermost layer of testa composed of radially elongated stone cells, subrounded, thick-walled, with fine and dense pits and pit canals; inside

showing several layers of stone cells, triangle or polygonal in shape, with slightly large pits. Oil cell layer composed of 1 layer of rectangular oil cells, containing brownish-yellow oil drops, further down 3~5 layers of small cells. Inner epidermal cells of testa composed of 1 layer of small cells, walls slightly thickened. Endosperm contains oil droplets and aleurone grains.

2. **Powder:** Dark purple. Epidermal cells of testa polygonal or elongated-polygonal in surface view, 18~50 μm in diameter, walls thickened with very fine and dense pit canals; lumen contains dark brown contents. Inner layer stone cells of testa polygonal to subrounded or irregular, up to 83 μm in diameter, with slightly thickened walls and distinct pits. Epidermal cells of exocarp polygonal in surface view, anticlinal walls slightly moniliform, with striated cuticle and scattered oil cells. Mesocarp cells shriveled, containing dark brown contents and starch granules.

Thin layer chromatographic identification test (General rule 1010.3):

1. Sample solution: Add 1.0 g of powdered sample to 10 mL of methanol, ultrasonicate for 30 minutes, filter and use the filtrate.
2. Reference drug solution: Use 1.0 g of the reference drug as the same method described above.
3. Reference standard solution: Weigh accurately a quantity of schisandrin and dissolve in methanol to produce a solution containing 1.0 mg per mL.
4. Procedure: Use silica gel F_{254} as the coating substance and a solution of ethyl acetate, *n*-hexane and glacial acetic acid (10:10:1) as the developing solvent. Apply 5 μL of each of the above solutions to the plate. Once the top of the solvent rise to about 5~10 cm from the origin, dry in air. Examine under ultraviolet light at 254 nm. The spots in the chromatogram obtained from the sample solution correspond in R_f values and color to the spots in the chromatogram obtained from the reference drug solution and reference standard solution.

Impurities and other requirements:

1. Total ash: Not more than 8.0% (General rule 5004).
2. Acid-insoluble ash: Not more than 1.0% (General rule 5004).

Assay:

1. Schisandrin:
   (1) Mobile phase: A solution of water and acetonitrile (1:1). The ratio varies as required.
   (2) Reference standard solution: Place schisandrin in a silicone dryer at 60℃ for 1 hour. Weigh accurately 1.0 mg and dissolve in 10 mL of methanol, mix well and use.
   (3) Sample solution: Weigh accurately 0.5 g of powdered sample, add 70 mL of methanol, ultrasonicate for 30 minutes, centrifugal filtration, and use the supernatant. The residue add 30 mL of methanol again and ultrasonicate for 15 minutes. Combine all supernatants and add methanol to 100 mL, mix well.
   (4) Chromatographic system: The liquid chromatography is equipped with an ultraviolet absorption photometer (wavelength: 252 nm) and a column (4.6 mm ×25 cm) packed with octadecylsilanized silica gel (10 μm in particle diameter). The column temperature is maintained at room temperature. The flow rate is about 1.0 mL/min. Inject reference standard solution into the liquid chromatography apparatus for five times, and record the peak areas. The relative standard deviation of the peak area of schisandrin should not be more than 1.5%.
   (5) Procedure: Inject accurately 20 μL of each of the reference standard solution and the sample solution into the liquid chromatography apparatus, and calculate the content.
2. Water extractives: Carry out the method for determination of water extractives (General rule 5006).
3. Dilute ethanol extractives: Carry out the method for determination of dilute ethanol-soluble extractives (General rule 5006).

Storage: Refrigerate or store in a cool and dry place, and protect from mold.
Usage: Astringent medicinal.
Dosage: 1.5~6 g.

SCHIZONEPETAE HERBA
荊芥
Jing Jie / Jing Jie
Schizonepeta Herb

Schizonepeta herb is the dried aerial part of *Schizonepeta tenuifolia* Briq. (Fam. Labiatae).
It contains not less than 7.0% of dilute ethanol-soluble extractives, not less than 7.0% of water extractives and not less than 0.3% (v/w) of volatile oil.

Description: Up to 100 cm in length. Stems branched at the upper part, quadrangular, 2~4 mm in diameter; externally pale yellowish-green or pale purplish-red, pubescent; texture light and fragile, fracture whitish. Leaves opposite, mostly fallen off, lamina 3~5 pinnatipartite as whole, lobes strip or lanceolate, pubescent. Pseudo-spike verticillaster terminal, 2~9 cm in length. Calyx persistent, campanulate, apex 5-toothed, pale brown or yellowish-green, pubescent. Corolla mostly fallen off. Nutlets brownish-black. Odor, aromatic; taste, slightly astringent, pungent, with a cooling sensation.

Microscopic identification:

1. **Powder:** Yellowish-brown. Glandular scales with a 8~13 celled subrounded head, 22~108 μm in diameter, and an unicellular stalk, extremely short, containing light yellow or brown contents. Small glandular hairs with a 1~2 celled head, 16~27 μm in diameter, and a unicellular short stalk. Non-glandular hairs 1~6 celled, 67~810 μm in length, the middle part slightly narrow, 22~45 μm in diameter at the base, wall slightly thickened, the upper cells with fine warty, the 1~2 lower cells with lateral cuticle striations. Epidermal cells of stem with thin and straight anticlinal walls; stomata anomocytic. Epidermal cells of leaf with anticlinal walls wavy and curved in surface view, containing stomata and trichomes. Pollen grains subspheroidal, 27~31 μm in diameter, with 6 pit canals, with reticular sculptures on the outer wall. Epidermal cells of pericarp (mucilage layer) subsquare or subrectangular in sectional view, walls mucilaginous, lumen small, irregularly branched, containing pale brown contents; inside showing pigment layer, the cells occasionally accompanied by epidermal cells upward; subpolygonal or rounded-polygonal in surface view, walls mucilaginous, with remains of lumen containing brown contents, small pigment cell groups scattered in epidermal tissue. Stone cells of pericarp 1 layered in sectional view, subrectangular or subsquare, with indistinct borders, walls thickened with clefts, lumen stellate, cells with numerous uneven branches after dissociation; subpolygonal in surface view, anticlinal walls deeply and undulately curved, pits sparse. Pigment cells of pericarp, testa cells, vessels and fibers present.

Thin layer chromatographic identification test (General rule 1010.3):

1. Sample solution: Add 1.0 g of powdered sample to 10 mL of ethanol, heat and shake in a water bath for 30 minutes, cool, filter and use the filtrate.
2. Reference drug solution: Use 1.0 g of the reference drug as the same method described above.
3. Procedure: Use silica gel F_{254} as the coating substance and a solution of ethyl acetate and *n*-hexane (3:7) as the developing solvent. Apply 5 μL of each of the above solutions to the plate. Once the top of the solvent rise to about 5~10 cm from the origin, dry in air. Spray with a solution of *p*-anisaldehyde in sulfuric acid (*p*-Anisaldehyde/ H_2SO_4 TS), and heat at 105℃ for 5 minutes until the spots become visible, examine under visible light. The spots in the chromatogram obtained from the sample solution correspond in R_f values and color to the spots in the chromatogram obtained from the reference drug solution.

Impurities and other requirements:

1. Loss on drying: Not more than 15.0% under heating at 105℃ for 5 hours (General rule 5008).
2. Total ash: Not more than 13.0% (General rule 5004).
3. Acid-insoluble ash: Not more than 5.0% (General rule 5004).

Assay:

1. Water extractives: Carry out the method for determination of water extractives (General rule 5006).
2. Dilute ethanol extractives: Carry out the method for determination of dilute ethanol-soluble extractives (General rule 5006).
3. Volatile oil: Carry out the method for determination of volatile oil (General rule 5007).

Storage: Refrigerate or store in a cool and dry place.
Usage: Exterior-releasing medicinal (Wind-cold dispersing medicinal).
Dosage: 4.5~9 g.

SCORPIO
全蠍
Cyuan Sie / Quan Xie
Scorpion

Scorpion is the dried body of *Buthus martensii* Karsch (Fam. Buthidae).
It contains not less than 18.0% of dilute ethanol-soluble extractives.

Description: The cephalothorax and preabdomen flattened long ellipsoidal, the postabdomen tail-like, shrunken and curved, the body of intact specimen about 6 cm in length. The cephalothorax greenish-brown, abdomen and appendage yellow, sting brown. The anterior part arising 1 pair of short and small chelicerae and 1 pair of long and large pedipalps in the shape of crab pincers, ventral part bearing 4 pairs of walking legs, composed of 7 segments, each of segments, with 2 claws on distal end. Abdomen consisted of preabdomen and postabdomen. The preabdomen broad, composed of 7 segments. The postabdomen slender, composed of 5 segments and one sting, with longitudinal furrows on each segment, the sting hooked, venomous. Texture light and fragile. Odor, slightly stinking; taste, salty.

Microscopic identification:

1. **Powder:** Yellowish-brown. Body walls yellowish-brown or yellowish-green, lustrous. Surface view of outer epidermis in polygonal reticulate striations, setae pits, circular holes and warty protuberance visible. Setae pits subrounded, sticking out from the outer epidermis, 15~40 μm in diameter. Setae yellowish-brown, body center 8~40 μm in diameter, with longitudinal striations, usually fallen off. Circular holes fine, 5~10 μm in diameter, existed

under reticulate striations. Warty protuberance pale brown or colorless. The fibers of striated muscle many, colorless or pale yellow, light bands relatively broad in lateral view, dark bands with dense and short longitudinal striations. Fatty oil droplets spheroidal, colorless or pale yellow.

Thin layer chromatographic identification test (General rule 1010.3):

1. Sample solution: Add 1.0 g of powdered sample to 10 mL of water, stand for overnight, filter and use the filtrate.
2. Reference drug solution: Use 1.0 g of the reference drug as the same method described above.
3. Procedure: Use silica gel F_{254} as the coating substance and a solution of *n*-butanol, glacial acetic acid, ethanol and water (4:1:1:2) as the developing solvent. Apply 10 μL of each of the above solutions to the plate. Once the top of the solvent rise to about 5~10 cm from the origin, dry in air. Spray with a 0.5% solution of ninhydrin hydrate, heat at 105℃ until the spots become visible. The spots in the chromatogram obtained from the sample solution correspond in R_f values and color to the spots in the chromatogram obtained from the reference drug solution.

Impurities and other requirements:

1. Total ash: Not more than 20.0% (General rule 5004).
2. Acid-insoluble ash: Not more than 3.0% (General rule 5004).

Assay:

1. Dilute ethanol extractives: Carry out the method for determination of dilute ethanol-soluble extractives (General rule 5006).

Storage: Store in a cool and dry place, and protect from insects.
Usage: Liver-pacifying and wind-extinguishing medicinal.
Dosage: 3~6 g.

SCROPHULARIAE RADIX
玄參
Syuan Shen / Xuan Shen
Scrophularia Root

Scrophularia root is the dried root of *Scrophularia ningpoensis* Hemsl. (Fam. Scrophulariaceae).
It contains not less than 50.0% of dilute ethanol-soluble extractives, not less than 50.0% of water extractives and not less than 0.45% of the total amount of harpagide and harpagoside.

Description: Conical, slightly thick at the middle part or thick at the upper part and slender at the lower part, occasionally slightly curved as claw-like, 6~20 cm in length, 1~3 cm in diameter. Externally grayish-yellow or brown, with distinct longitudinal grooves and transverse lenticels. Texture compact, uneasily broken, fracture even, black, slightly lustrous. Odor, characteristic resembling caramel; taste, sweetish and slightly bitter. Gives a result of black water when soaked.

Microscopic identification:

1. **Transverse section:** Metaderm cells brownish-yellow, irregular rectangular in shape, slightly suberized. Cortex cells tangentially elongated, rectangular or subrounded; stone cells singly scattered or in groups of 3~5. Phloem rays with many fissures. Cambium present as a ring. Xylem presents as the majority proportion of section, xylem rays broad, mostly cleft-shaped, vessels arranged intermittently and radially, some vessels scattered in center. Parenchymatous cells contain nucleus-like contents.
2. **Powder:** Grayish-brown. Stone cells numerous, mostly singly scattered or 2~5 in groups; varying in shape, rectangular, subsquare, subrounded or irregular in shape, relatively large, 22~94 μm in diameter, walls 5~26 μm thick, with distinct striations. Fragments of parenchymatous cells numerous, containing nucleus-like contents. Xylem fibers slender, with walls slightly lignified. Reticulate and pitted vessels also exist.

Thin layer chromatographic identification test (General rule 1010.3):

1. Sample solution: Take 1.0 g of powdered sample to a round-bottom flask, add 10 mL of methanol, heat under reflux for 30 minutes, cool and filter, make up to 10 mL and use the filtrate.
2. Reference drug solution: Use 1.0 g of the reference drug as the same method described above.
3. Procedure: Use silica gel F_{254} as the coating substance and a solution of chloroform and ethyl acetate (1:1) as the developing solvent. Apply 5 μL of each of the above solutions to the plate. Once the top of the solvent rise to about 5~10 cm from the origin, dry in air. Examine under ultraviolet light at 254 nm. The spots in the chromatogram obtained from the sample solution correspond in R_f values and color to the spots in the chromatogram obtained from the reference drug solution.

Impurities and other requirements:

1. Total ash: Not more than 5.0% (General rule 5004).
2. Acid-insoluble ash: Not more than 1.5% (General rule 5004).

Assay:

1. Harpagide and harpagoside:
   (1) Mobile phase: A solution of acetonitrile as the mobile phase A, and a solution of 0.03% phosphoric acid as the mobile phase B.

(2) Reference standard solution: Weigh accurately a quantity of harpagide and harpagoside and dissolve in 30% methanol to produce a solution containing 60 μg and 20 μg per mL of each.

(3) Sample solution: Weigh accurately 0.5 g of powdered sample, transfer to a conical flask with stopper, accurately add 50 mL of 50% methanol, stopper tightly and weigh, soak for 1 hour, ultrasonicate for 45 minutes, cool, and weigh again, replenish the loss weight with 50% methanol, mix well, filter and use the successive filtrate.

(4) Chromatographic system: The liquid chromatography is equipped with an ultraviolet absorption photometer (wavelength: 210 nm) and a column packed with octadecylsilanized silica gel. The number of theoretical plates of the peak of harpagide and harpagoside should not be less than 5,000.

Time (min)	Mobile phase A (%)	Mobile phase B (%)
0~10	3→10	97→90
10~20	10→33	90→67
20~25	33→50	67→50
25~30	50→80	50→20
30~35	80	20
35~37	80→3	20→97

(5) Procedure: Inject accurately 10 μL of each of the reference standard solution and the sample solution into the liquid chromatography apparatus, and calculate the content.

2. Water extractives: Carry out the method for determination of water extractives (General rule 5006).
3. Dilute ethanol extractives: Carry out the method for determination of dilute ethanol-soluble extractives (General rule 5006).

Storage: Refrigerate or store in a cool and dry place, and protect from mold and insects.
Usage: Heat-clearing medicinal (Heat-clearing and blood-cooling medicinal).
Dosage: 9~15 g.

SCUTELLARIAE BARBATAE HERBA
半枝蓮
Ban Jhih Lian / Ban Zhi Lian
Barbated Skullcap Herb

Barbated skullcap herb is the dried herb of *Scutellaria barbata* D. Don (Fam. Labiatae).

It contains not less than 12.0% of dilute ethanol-soluble extractives, not less than 14.0% of water extractives and not less than 0.20% of scutellarin.

Description: 15~35 cm in length. Stems quadrangular, 1~3 mm in diameter, externally brownish-green or dark purple, texture fragile and easily broken, fracture hollow. Leaves opposite, petioles short; lamina mostly crumpled, lanceolate or subtriangular as whole, the upper surface dark green, the lower surface grayish-green, 1.5~3 cm in length, 0.5~1 cm in width. Vertisillaster terminal, 2 flowers in one whorl, several whorls clustered to racemes. Corolla mostly fallen off, calyx persistent with 4 oblate nutlets inside. Odor, slight; taste, slightly bitter.

Microscopic identification:

1. **Transverse section:**
   (1) Leaf: Epidermal cells polygonal, anticlinal walls undulate; upper epidermis relatively large, 50~90 μm in length, 15~40 μm in width; lower epidermis 25~50 μm in length, 10~25 μm in width. Stomata usually exist in lower epidermis. Palisade cells composed of 1 row of cells, containing numerous chloroplasts; spongy cells composed of 2~3 rows of subrounded cells. Non-glandular hairs composed of 1~3 conical shaped cells, 50~140 μm in length. Glandular hairs exist in lower epidermis, the head composed of 4 cells, 28 μm in diameter, singular celled stalk. Glandular scales mostly present in lower epidermis, the heads spheroidal, 50~75 μm in diameter, singular celled stalk.
2. **Powder:**
   (1) Leaf: Pale brown. Epidermal cells polygonal; upper epidermal cells 50~90 μm in length, 15~40 μm in width; lower epidermal cells 25~50 μm in length, 10~25 μm in width. Palisade cells 40~80 μm in length, 10~35 μm in width, containing numerous chloroplasts. Most of spongy cells subrounded, occasionally spiral vessels. Non-glandular hairs conical, 50~140 μm in length.

Thin layer chromatographic identification test (General rule 1010.3):

1. Sample solution: Add 1.0 g of powdered sample to 15 mL of methanol, ultrasonicate for 30 minutes then filter, use the filtrate.
2. Reference drug solution: Use 1.0 g of the reference drug as the same method described above.
3. Reference standard solution: Weigh accurately a quantity of apigenin and dissolve in methanol to produce a solution containing 0.1 mg per mL.
4. Procedure: Use silica gel F_{254} as the coating substance and a solution of dichloromethane, methanol and formic acid (10:0.5:0.5) as the developing solvent. Apply 10 μL of each of the above solutions to the plate. Once the top of the solvent rise to about 5~10 cm from the origin, dry

in air. Spray with a 5% solution of aluminum chloride in ethanol ($AlCl_3$/EtOH TS) and heat at 105℃ until the spots become visible. The spots in the chromatogram obtained from the sample solution correspond in R_f values and color to the spots in the chromatogram obtained from the reference drug solution and the reference standard solution.

Impurities and other requirements:

1. Loss on drying: Not more than 13.0% under heating at 105℃ for 5 hours (General rule 5008).
2. Total ash: Not more than 8.0% (General rule 5004).
3. Acid-insoluble ash: Not more than 3.0% (General rule 5004).

Assay:

1. Scutellarin:
   (1) Mobile phase: A solution of 1% acetic acid as the mobile phase A, and a solution of acetonitrile as the mobile phase B.
   (2) Reference standard solution: Weigh accurately a quantity of scutellarin and dissolve in methanol to produce a solution containing 25 µg per mL.
   (3) Sample solution: Weigh accurately 0.2 g of powdered sample, transfer to a 100-mL round-bottom flask, accurately add 25 mL of 70% ethanol, heat under reflux for 15 minutes, cool, filter, transfer the solution to 50-mL volumetric flask, extract again, combine the filtrate, add 70% ethanol to volume, filter and use the successive filtrate.
   (4) Chromatographic system: The liquid chromatography is equipped with an ultraviolet absorption photometer (wavelength: 335 nm) and a column packed with octadecylsilanized silica gel. The number of theoretical plates of the peak of scutellarin should not be less than 1,500.

Time (min)	Mobile phase A (%)	Mobile phase B (%)
0~15	83→75	17→25
15~30	75	25

   (5) Procedure: Inject accurately 10 µL of each of the reference standard solution and the sample solution into the liquid chromatography apparatus, and calculate the content.
2. Water extractives: Carry out the method for determination of water extractives (General rule 5006).
3. Dilute ethanol extractives: Carry out the method for determination of dilute ethanol-soluble extractives (General rule 5006).

Storage: Store in a cool and dry place, and protect from moisture.
Usage: Heat-clearing medicinal (Heat-clearing and detoxcating medicinal).
Dosage: 15~30 g.

SCUTELLARIAE RADIX
黃芩
Huang Cin / Huang Qin
Scutellaria Root

Scutellaria root is the dried root of *Scutellaria baicalensis* Georgi (Fam. Labiatae).
It contains not less than 26.0% of dilute ethanol-soluble extractives, not less than 18.0% of water extractives and not less than 8.0% of baicalin.

Description: Conical, twisted, 8~30 cm in length, 1~4 cm in diameter. Externally brownish-yellow or dark yellow, bearing with sparse warty traces of rootlets, apex with scar of stem or remained stem base, the upper part rough, with twisted longitudinal striations and irregular reticulate wrinkles, the lower part with regular and fine wrinkles. Texture hard and fragile, easily broken, fracture yellow, reddish-brown in the center; the central part of an old root dark brown or brownish-black, withered or hollowed, commonly known as "Ku Cin"; the new root commonly known as "Zih Cin" or "Tiao Cin". Odor, slight; taste, bitter.

Microscopic identification:

1. **Transverse section:** The margins of cork mostly broken, cork cells flattened, scattered with stone cells. Narrow cortex and broad phloem with indistinct cell boundaries, scattered with numerous stone cells and phloem fibers, singly scattered or in groups, stone cells mostly presented at the outer margin, phloem fibers mostly presented at the inner side. Cambium in a ring. Xylem vessels in bundles, about 6~20, arranged into flatten layer-shaped, in the center of old roots, forming suberized cell ring, single ring or several in concentric circles. Parenchymatous cells contain starch granules.
2. **Powder:** Yellow. Phloem fibers extremely numerous, fusiform, 50~250 µm in length, 10~40 µm in diameter, wall extremely thickened, pit canals distinct. Xylem fibers relatively slender, mostly broken, wall slightly thickened, with oblique pits. Stone cells relatively numerous, subrounded, elongated-rounded, subsquare or irregular, 60~160 µm in length, wall up to 24 µm thick, pit canals occasionally branched. Reticulate vessels usually visible, bordered-pitted and annular vessels relatively few, fusiform xylem parenchymatous cells accompanied by vessels, with septa. Cork cells brownish-yellow, polygonal. Simple starch granules subspheroidal, 4~10 µm in

diameter; compound granules rare, composed of 2~3 components.

Thin layer chromatographic identification test (General rule 1010.3):

1. Sample solution: Add 1.0 g of powdered sample to 15 mL of methanol, ultrasonicate for 30 minutes, filter and use the filtrate.
2. Reference drug solution: Use 1.0 g of the reference drug as the same method described above.
3. Reference standard solution: Weigh accurately a quantity of baicalin and dissolve in methanol to produce a solution containing 1.0 mg per mL.
4. Procedure: Use silica gel F_{254} as the coating substance and a solution of *n*-butanol, glacial acetic acid and water (7:1:2) as the developing solvent. Apply 10 μL of each of the above solutions to the plate. Once the top of the solvent rise to about 5~10 cm from the origin, dry in air. Examine under the ultraviolet light at 254 nm. The spots in the chromatogram obtained from the sample solution correspond in R_f values and color to the spots in the chromatogram obtained with the reference drug solution and the reference standard solution.

Impurities and other requirements:

1. Loss on drying: Not more than 14.0% under heating at 105℃ for 5 hours (General rule 5008).
2. Total ash: Not more than 6.0% (General rule 5004).
3. Acid-insoluble ash: Not more than 2.0% (General rule 5004).
4. Total heavy metals: Not more than 10.0 ppm (General rule 3005).
5. Arsenic (As): Not more than 5.0 ppm (General rule 3006, 3049, 3050).

Assay:

1. Baicalin:
   (1) Mobile phase: A solution of dilute phosphoric acid (1 in 146) and acetonitrile (18:7) as the mobile phase.
   (2) Reference standard solution: Place baicalin in a silicone dryer, and depressurize for more than 24 hours. Weigh accurately 10 mg, transfer to a 20-mL flask, and add methanol to volume.
   (3) Sample solution: Weigh accurately 0.5 g of the powdered sample, transfer to a round bottom flask, add accurately 30 mL of mobile phase solvent, heat under reflux for 30 minutes, cool, transfer the solution to centrifuge tube with stopper, shake for 5 minutes, centrifuge, and collect the supernatant. Wash the column with 30 mL of mobile phase solvent, collect, centrifuge, and collect the supernatant. Take the residue, add 30 mL of mobile phase solvent, shake for 5 minutes, centrifuge, and collect the supernatant. Combine all supernatants, add mobile phase solvent to 100 mL. Weigh accurately 2 mL of the solution, transfer to 20-mL volumetric flask, add mobile phase solvent to volume.
   (4) Chromatographic system: The liquid chromatography is equipped with an ultraviolet absorption photometer (wavelength: 277 nm) and a column (4~6 mm × 15~25 cm) packed with octadecylsilanized silica gel (5~10 μm in particle diameter). The column temperature is maintained at 50℃. The retention time of baicalin is about 6 minute. Inject reference standard solution into the liquid chromatography apparatus for five times, and record the peak areas. The relative standard deviation of the peak area of baicalin should not be more than 1.5%.
   (5) Procedure: Inject accurately 10 μL of each of the reference standard solution and the sample solution into the liquid chromatography apparatus, and calculate the content.
2. Water extractives: Carry out the method for determination of water extractives (General rule 5006).
3. Dilute ethanol extractives: Carry out the method for determination of dilute ethanol-soluble extractives (General rule 5006).

Storage: Refrigerate or store in a cool and dry place, and protect from insects.
Usage: Heat-clearing medicinal (Heat-clearing and dampness-drying medicinal).
Dosage: 3~10 g.

SELAGINELLAE HERBA
卷柏
Jyuan Bo / Juan Bo
Tamarishoid Spikemoss Herb

Tamarishoid spikemoss herb is the dried herb of *Selaginella tamariscina* (Beauv.) Spring or *Selaginella pulvinata* (Hook. et Grev.) Maxim. (Fam. Selaginellaceae).
It contains not less than 4.0% of dilute ethanol-soluble extractives and not less than 5.0% of water extractives.

Description: Crumpled into masses, fist-shaped or flattened spheroidal, varying in size, 3~10 cm in length. Branches fascicled, flat and branched, green or brownish-yellow, curved inwards, densely growing scaly leaflets at the apex. Central leaves (ventral leaves) ovate-oblong, arranged obliquely upward, margin membranous. Dorsal leaves (lateral leaves), membranous margin of dorsal surface frequently brownish-black or grayish-brown, margin irregular serrate or entire,

glabrous. Texture fragile, easily broken. Base remained with fibrous roots. Odor, slight; taste, weak.

Microscopic identification:

1. **Transverse section:**
   (1) Stem of *Selaginella tamariscina*: Outermost layer composed of 1 row of epidermis, subrounded or suboblong, the outer walls slightly thickened; inside showing sclerenchyma, 12~15 layers, cells subrounded or suboblong, subisodiametric, cell diameter gradually increase from outside to inside. Parenchymatous cells of cortex 4~6 layers, subrounded or ovoid, leaf-trace vascular bundles occasionally found, every vascular bundle surrounded by aerenchyma. 1~2 long-ellipsoid or ovoid-rounded air cavities present in the inner part of cortex, with elongated-ellipsoid or elongated strip-shaped stele in the center of air cavity; all of these connected with endodermis through several transverse bridges, transverse bridges arranged radially. Stele sheath distinct, xylem cells completely lignified.
   (2) Stem of *Selaginella pulvinata*: Air cavity 1, ovate-triangular.
2. **Powder:** Grayish-green. Epidermal cells of leaf subrectangular or subpolygonal in surface view, with some oblong stomata. Tracheids mainly scalariform, spiral tracheids occasionally found, 4~30 μm in diameter. Epidermal cells of stem covered with cuticle, cells subrectangular or subpolygonal. Sclerenchyma cells subrounded or suboblong, with moniliform pits.

Thin layer chromatographic identification test (General rule 1010.3):

1. Sample solution: Add 2.0 g of powdered sample to 50 mL of methanol, heat under reflux for 1 hour then filter, evaporate the filtrate to dryness, dissolve the residue in 3 mL of absolute ethanol.
2. Reference drug solution: Use 2.0 g of the reference drug as the same method described above.
3. Procedure: Use silica gel F_{254} as the coating substance and a solution of isopropanol, concentrated ammonia solution and water (13:1:1) as the developing solvent. Apply 3 μL of each of the above solutions to the plate. Once the top of the solvent rise to about 5~10 cm from the origin, dry in air. Spray with a 2% solution of aluminum chloride in methanol ($AlC1_3$/MeOH TS), and examine under the ultraviolet light at 365 nm. The spots in the chromatogram obtained from the sample solution correspond in R_f values and color to the spots in the chromatogram obtained from the reference drug solution.

Impurities and other requirements:

1. Loss on drying: Not more than 11.0% under heating at 105℃ for 5 hours (General rule 5008).
2. Total ash: Not more than 15.0% (General rule 5004).
3. Acid-insoluble ash: Not more than 13.0% (General rule 5004).

Assay:

1. Water extractives: Carry out the method for determination of water extractives (General rule 5006).
2. Dilute ethanol extractives: Carry out the method for determination of dilute ethanol-soluble extractives (General rule 5006).

Storage: Store in a cool and dry place.
Usage: Hemostatic medicinal.
Dosage: 4.5~9 g.
Precaution and warning: Used with caution in pregnancy.

SENNAE FOLIUM
番瀉葉
Fan Sie Ye / Fan Xie Ye
Senna Leaf

Senna leaf is the dried leaflet of *Cassia angustifolia* Vahl or *Cassia acutifolia* Delile (Fam. Leguminosae).
It contains not less than 1.1% of the total amount of sennoside A and sennoside B.

Description: Lanceolate or narrowly lanceolate, 1.5~5 cm in length, 0.5~2 cm in width, pale grayish-yellow to pale yellowish-green, margin enter, apex acute, base slightly asymmetrical, with short petiole. Vein protuberant. Lower surface covered with sparse hairs. Odor, slight; taste, slightly bitter.

Microscopic identification:

1. **Transverse section:** Both upper and lower epidermis composed of 1 row of epidermal cells with stomata. Mesophyll isobilateral, composed of 2 rows of palisade cells, located at inner side of upper and lower epidermis respectively. The upper layer cells of palisade tissue relative long, up to 150 μm in length. The lower layer cells of palisade tissue 35~60 μm in length. Prisms and clusters of calcium oxalate scattered in parenchymatous cells. Several dozens fibers in bundles, surrounded by parenchymatous cells containing prisms of calcium oxalate, forming crystal fibers. Vascular bundles collateral. Collenchyma located at the inner side of the lower epidermis. Non-glandular hairs occasionally visible in lower epidermis.

Thin layer chromatographic identification test (General rule 1010.3):

1. Sample solution: Add 2.0 g of powdered sample to 25 mL of methanol, ultrasonicate for 30 minutes, stand, filter and use the filtrate.
2. Reference drug solution: Use 2.0 g of the reference drug as the same method described above.
3. Reference standard solution: Weigh accurately 1.0 mg of sennoside and dissolve in 1 mL of tetrahydrofuran and water (7:3) to produce a solution containing 1.0 mg per mL.
4. Procedure: Use silica gel F_{254} as the coating substance and a solution of *n*-propanol ethyl acetate, water and glacial acetic acid (40:40:30:1) as the developing solvent. Apply 10 μL of each of the above solutions to the plate. Once the top of the solvent rise to about 5~10 cm from the origin, dry in air. Examine under the ultraviolet light at 365 nm. The red spots in the chromatogram obtained with the sample solution corresponds in R_f values and color to the spots in the chromatogram obtained with the reference drug solution and the reference standard solution.

Impurities and other requirements:

1. Foreign matter: Petioles and fruits not more than 5.0% (General rule 5003).
2. Foreign matter: Not more than 1.0%, except for petioles and fruits (General rule 5003).
3. Pesticide residues:
   (1) The total DDT content: Not more than 0.2 ppm (General rule 3052).
   (2) The total BHC content: Not more than 0.9 ppm (General rule 3052).
   (3) The total PCNB content: Not more than 1.0 ppm (General rule 3052).

Assay:

1. Sennoside A and sennoside B:
   (1) Mobile phase: Add 2.45 g of tetraheptylammonium bromide in 1,000 mL solution of acetonitrile and 5 mmol/L acetic acid-sodium acetate buffer solution (pH5.0) (1 in 10) (35：65). The ratio varies as required.
   (2) Reference standard solution: Weigh accurately a quantity of sennoside A and sennoside B, dry in vacuum for 12 hour, transfer into a brown flask, dissolve in 0.1% sodium carbonate to produce a solution containing 50 μg and 0.1 mg per mL of each.
   (3) Sample solution: Weigh accurately 0.5 g of the powdered sample, transfer to a conical flask with stopper, accurately add 50 mL of 0.1% solution of sodium carbonate, weigh, ultrasonicate under 30~40℃ for 15 minutes, cool, weigh again and replenish the loss of the weight with 0.1% solution of sodium carbonate, mix well, filter and use the filtrate.
   (4) Chromatographic system: The liquid chromatography is equipped with an ultraviolet absorption photometer (wavelength: 340 nm) and a column packed with octadecylsilanized silica gel. The column temperature is maintained at 40℃. The number of theoretical plates of the peak of sennoside B should not be less than 6,500.
   (5) Procedure: Inject accurately 10 μL of each of the reference standard solution and the sample solution into the liquid chromatography apparatus, and calculate the content.

Storage: Store in a cool and dry place, and protect from light.
Usage: Purgative medicinal.
Dosage: 2~6 g.
Precaution and warning: Used with caution in pregnancy.

SEPIAE ENDOCONCHA
海螵蛸
Hai Piao Siao / Hai Piao Xiao
Cuttlebone

Cuttlebone is the dried internal shell of *Sepiella maindroni* de Rochebrune or *Sepia esculenta* Hoyle (Fam. Sepiidae).

Description:

1. Internal shell of *Sepiella maindroni*: Flattened oblong, thick in the central part and thin at the edge, 9~14 cm in length, 2.5~3.5 cm in width, 1.2~1.5 cm thick. The dorsal surface bearing a porcelain white ridge-like protuberance, both sides slightly reddish, with indistinct minute tubercles arranged in semi-annular striations. The ventral surface white, with fine and dense undulate transverse striations from the caudal end to the middle portion. The caudal portion relatively wide and even, without bony spine. Texture light and fragile, fracture white, powdery, with slightly curved parallel striations. Odor, slightly stinking; taste, slightly salty.
2. Internal shell of *Sepia esculenta*: 13~23 cm in length, 5~7 cm in width, 0.8~1.2 cm thick, relatively thicker in the front part. The dorsal surface with distinct larger tubercles, slightly laminated arranged. The ventral surface mostly covered by the undulate transverse striations, with a distinct dark purple transverse striations in the front. The horny margin of the caudal portion gradually widen and curved ventrally, with a bony spine at the end, usually broken and fallen off.

Microscopic identification:

1. **Powder:** Off-white. Under the microscope identification, irregular transparent thin slices

abundant, some with fine striations; some in irregular broken pieces, with reticulate or dotted striations on the surface.

Identification:
1. Take a quantity of powdered sample, add drops of dilute hydrochloric acid, bubble is produced.

Impurities and other requirements:
1. Loss on drying: Not more than 6.0% under heating at 105℃ for 5 hours (General rule 5008).
2. Acid-insoluble ash: Not more than 16.0% (General rule 5004).

Storage: Store in a dry place.
Usage: Astringent medicinal.
Dosage: 3~10 g for decocting, 1~4 g for powdering.

SESAMI NIGRUM SEMEN
胡麻仁
Hu Ma Ren / Hu Ma Ren
Black Sesame

Black sesame is the dried ripe seed of *Sesamum indicum* L. (Fam. Pedaliaceae), commonly known as "Hei Zhi Ma".
It contains not less than 3.0% of dilute ethanol-soluble extractives and not less than 4.0% of water extractives.

Description: Flattened-ovate, one end acute, the other obtuse, 0.2~0.4 cm in length, 0.1~0.2 cm in width, about 0.1 cm thick. Externally black, with reticulate wrinkles or indistinct, apex with brown dotted hilum, testa membranous, endosperm thin membranous in longitudinal section, cotyledons 2, whitish, oily. Odor, slight; taste, slightly, oily aromatic after crushing.

Microscopic identification:
1. **Transverse section:** Outermost layer of testa composed of 1 row of cylindrical cells arranged palisade-like, cells filled with black pigments, containing spherical crystals of calcium oxalate, aggregated by numerous cylinder prisms of calcium oxalate; inside showing 1 row of suboblong parenchymatous cells, cylinder prisms of calcium oxalate usually found; inside showing flat fragments of perisperm cells, endosperm composed of 3~4 rows of parenchymatous cells. Cotyledons 2, palisade cells existed under the upper epidermis. Cells of endosperm and embryo filled with aleurone grains and fatty oil.
2. **Powder:** Grayish-black. Testa cells polygonal in surface view, lumen filled with black pigments and spherical crystals of calcium oxalate, 25~48 μm in diameter. Cylinder prisms of calcium oxalate subcylindrical or subclavate, about 24 μm in length. Cells of cotyledons and embryo contain abundant aleurone grains and fatty oil droplets.

Thin layer chromatographic identification test (General rule 1010.3):
1. Sample solution: Add 1.0 g of powdered sample to 10 mL of methanol, ultrasonicate for 30 minutes, filter and use the filtrate.
2. Reference drug solution: Use 1.0 g of the reference drug as the same method described above.
3. Reference standard solution: Weigh accurately a quantity of sesamin and β-sitosterol and dissolve in absolute ethanol to produce a solution containing 1.0 mg per mL of each.
4. Procedure: Use silica gel F_{254} as the coating substance and a solution of *n*-hexane, ethyl ether and ethyl acetate (40:11:5) as the developing solvent. Apply 5 μL of the sample solution and reference drug solution and 2 μL of the reference standard solution to the plate. Once the top of the solvent rise to about 5~10 cm from the origin, dry in air. Spray with a 10% solution of sulfuric acid in ethanol (H_2SO_4/EtOH TS), heat until the spots become visible, examine under visible light. The spots in the chromatogram obtained from the sample solution correspond in R_f values and color to the spots in the chromatogram obtained from the reference drug solution and the reference standard solution.

Impurities and other requirements:
1. Loss on drying: Not more than 7.0% under heating at 105℃ for 5 hours (General rule 5008).
2. Total ash: Not more than 8.0% (General rule 5004).
3. Acid-insoluble ash: Not more than 1.0% (General rule 5004).

Assay:
1. Water extractives: Carry out the method for determination of water extractives (General rule 5006).
2. Dilute ethanol extractives: Carry out the method for determination of dilute ethanol-soluble extractives (General rule 5006).

Storage: Store in a ventilated and dry place, and protect from insects.
Usage: Tonifying and replenishing medicinal (Yin-tonifying medicinal).
Dosage: 9~15 g.

SIEGESBECKIAE HERBA
豨薟草
Si Lian Cao / Xi Lian Cao
Glandularstalk St. Paulswort Herb

Glandularstalk St. Paulswort herb is the dried aerial part of *Siegesbeckia orientalis* L., *Siegesbeckia pubescens* Makino or *Siegesbeckia glabrescens* Makino (Fam. Compositae).

It contains not less than 13.0% of dilute ethanol-soluble extractives and not less than 4.0% of water extractives.

Description:

1. Aerial part of *Siegesbeckia orientalis*: Stems 30~120 cm in length, 3~12 mm in diameter, the lower part subcylindrical or flattened cylindrical, externally grayish-brown, occasionally with purplish-brown, with distinctly longitudinal furrows and fine wrinkles, covered with grayish-white pubescence; nodes distinct, slightly swollen; the upper part complex dichotomous branching, covered with dense grayish-white pubescence; texture light and fragile, easily broken, fracture yellowish-white or pale green, pith hollowed or whitish. Leaves opposite, lamina crumpled or rolled, ovate-lanceolate as whole, grayish green, 1.2~3.5 cm in length, 2.5~7 cm in width, margin shallow undulate or entire. Some bearing heads, peduncles with dense grayish-white piloses. Some bearing obovoid achenes, about 3~3.5 mm in length. Odor, slight; taste, slightly bitter.
2. Aerial part of *Siegesbeckia pubescens*: The upper part of stem with relatively more dichotomous branching. Leaves ovoid as whole, margin crenate with grayish-white pubescence. Peduncles with dark brown glandular-pubescence or long piloses. Achenes about 3.5 mm in length.
3. Aerial part of *Siegesbeckia glabrescens*: Stem relatively slender, less than 80 cm in length. The upper part of stem with separate grayish-white pubescence. Leaves ovoid as whole, margin regularly serrate. Achenes about 2 mm in length.

Microscopic identification:

1. **Transverse section:**
   (1) Stem: Epidermis composed of 1 row of subrectangular to subpolygonal cells, covered with cuticle, containing non-glandular hairs. The outer part of cortex composed of 5~6 layers of subrounded or subpolygonal collenchyma tissue; inside showing several dozens rows of parenchymatous cells, containing yellowish-brown contents. Pericyclic fiber bundles arranged in an interrupted ring; vascular bundles arranged in a ring; cambium indistinct; xylem well developed. Vessels mainly bordered-pitted, reticulate and spiral
   (2) Leaf: Upper epidermis with anticlinal walls slightly straight, lower epidermis with anticlinal walls sinuous, with stomata and hairs. Non-glandular hairs composed of 4~6 cells, glandular hairs composed of overlapped 4 cells. Palisade tissue 1 row, spongy tissue 2~3 rows. Outside the phloem scattered with a few of fibers, xylem cells lignified.
2. **Powder:** Grayish-white. Non-glandular hairs 1- to 6-celled, the apex relatively slender, the base relatively large. Glandular hairs subrounded in top view, composed of 4~6 cells, containing pale yellowish-brown contents. Parenchymatous cells subpolygonal, subsquare or subrounded, containing yellowish-brown contents. Vessels mainly bordered-pitted, reticulate and spiral, 12~88 μm in diameter. Xylem fibers scattered or in bundles, with pits cleft-shaped. Mesophyll contains clusters of calcium oxalate, 8~14 μm in diameter. Pollen grains occasionally found, subrounded, with spiny protuberance on the surface.

Thin layer chromatographic identification test (General rule 1010.3):

1. Sample solution: Add 1.0 g of powdered sample to 10 mL of methanol, ultrasonicate for 15 minutes, filter and use the filtrate.
2. Reference drug solution: Use 1.0 g of the reference drug as the same method described above.
3. Reference standard solution: Weigh accurately a quantity of kirenol and dissolve in methanol to produce a solution containing 0.1 mg per mL.
4. Procedure: Use silica gel F_{254} as the coating substance and a solution of chloroform and methanol (4:1) as the developing solvent. Apply 5 μL of each of the above solutions to the plate. Once the top of the solvent rise to about 5~10 cm from the origin, dry in air. Spray with a 5% solution of vanillin in sulfuric acid (Vanillin/H_2SO_4 TS) and heat at 105℃ until the spots become visible. Examine under the visible light. The spots in the chromatogram obtained from the sample solution correspond in R_f values and color to the spots in the chromatogram obtained from the reference drug solution and the reference standard solution.

Impurities and other requirements:

1. Loss on drying: Not more than 13.0% under heating at 105℃ for 5 hours (General rule 5008).
2. Total ash: Not more than 13.0% (General rule 5004).
3. Acid-insoluble ash: Not more than 4.0% (General rule 5004).

Assay:

1. Water extractives: Carry out the method for determination of water extractives (General rule 5006).
2. Dilute ethanol extractives: Carry out the method for determination of dilute ethanol-soluble extractives (General rule 5006).

Storage: Store in a ventilated and dry place.
Usage: Wind-dampness-dispelling medicinal.
Dosage: 9~12 g.

SINAPIS ALBAE SEMEN
白芥子
Bai Jie Zih / Bai Jie Zi
White Mustard Seed

White mustard seed is the dried ripe seed of *Sinapis alba* L. (Fam. Cruciferae).
It contains not less than 12.0% of dilute ethanol-soluble extractives, not less than 11.0% of water extractives and not less than 0.50% of sinapine, calculated with sinapine cyanide sulfonate.

Description: Spheroidal, 1~2.5 mm in diameter. Externally grayish-white or yellowish-white, glossy, finely reticulated, with a dark colored and point-like hilum. Testa thin and fragile, after cutting, shows 2 cotyledons folded as saddle, radicle folded hidden in between the cotyledons. Odorless; taste, slightly pungent.

Microscopic identification:

1. **Transverse section:** Epidermis composed of 1 layer of mucilage cells with mucilage striations; hypodermis composed of 2 layers of cells, approximately equal in size; palisade cells composed of 1 layer of sclerenchyma cells, approximately equal in height, with thickened inner and lateral walls and thin outer walls; pigment cells fallen off, without pigments. Endosperm composed of 1~2 layers of subrectangular cells, containing aleurone grains. Cotyledons and parenchymatous cells of radical contain fatty oil droplets and aleurone grains.
2. **Powder:** Pale brown. Palisade cells of testa pale yellow, composed of 1 layer of cells, approximately equal to height in sectional view, 14~26 μm in length, 7~17 μm in diameter, with thin outer and above the middle of lateral walls and thickened inner and lower lateral walls; subpolygonal or slightly extended in surface view, anticlinal walls straight or with curved undulation, 2~3 μm thick. Epidermal cells of testa subsquare or radially elongated in sectional view, swollen and mucification when moistened with water. Inner surface with indistinct longitudinal rod-shaped cellulose column formed by sedimentary cellulose; polygonal or subpolygonal in surface view, umbilical-shaped cellulose column surrounded by mucilage striations. Hypodermal cells of testa mostly shrunken, with indistinct intercellular spaces. Endosperm cells contain aleurone grains, oil droplets and gray granules; cotyledon cells contain aleurone grains and fatty oil droplets.

Thin layer chromatographic identification test (General rule 1010.3):

1. Sample solution: Add 1.0 g of powdered sample to 50 mL of methanol, ultrasonicate for 1 hour, filter and evaporate the filtrate to dryness, and dissolve the residue in 5 mL of methanol.
2. Reference drug solution: Use 1.0 g of the reference drug as the same method described above.
3. Reference standard solution: Weigh accurately a quantity of sinapine cyanide sulfonate and dissolve in methanol to produce a solution containing 1.0 mg per mL.
4. Procedure: Use silica gel F_{254} as the coating substance and a solution of ethyl acetate, acetone, formic acid and water (3.5:5:1:0.5) as the developing solvent. Apply 5~10 μL of each of the above solutions to the plate. Once the top of the solvent rise to about 5~10 cm from the origin, dry in air. Spray with modified Dragendorff's reagent. The spots in the chromatogram obtained from the sample solution correspond in R_f values and color to the spots in the chromatogram obtained from the reference drug solution and the reference standard solution.

Impurities and other requirements:

1. Loss on drying: Not more than 10.0% under heating at 105℃ for 5 hours (General rule 5008).
2. Total ash: Not more than 6.0% (General rule 5004).
3. Acid-insoluble ash: Not more than 2.0% (General rule 5004).

Assay:

1. Sinapine:
   (1) Mobile phase: A solution of acetonitrile and 0.08 mol/L potassium dihydrogen phosphate solution (10:90). The ratio varies as required.
   (2) Reference standard solution: Weigh accurately a quantity of sinapine cyanide sulfonate and dissolve in mobile phase to produce a solution containing 0.2 mg per mL.
   (3) Sample solution: Weigh accurately 1.0 g of powdered sample in a conical flask with stopper, add 50 mL of methanol, ultrasonicate for 20 minutes, and filter. Extract the residue for three times as the same method. Combine the filtrates and evaporate the filtrates to dryness. Dissolve the residue with mobile phase, transfer to a 50-mL volumetric flask, add mobile phase to volume, and mix well.
   (4) Chromatographic system: The liquid chromatography is equipped with an ultraviolet absorption photometer (wavelength: 326 nm) and a column packed with octadecylsilanized silica gel. The number of theoretical plates of the peak of sinapine should not be less than 3,000.
   (5) Procedure: Inject accurately 10 μL of each of the reference standard solution and the sample solution into the liquid chromatography apparatus, and calculate the content.

2. Water extractives: Carry out the method for determination of water extractives (General rule 5006).
3. Dilute ethanol extractives: Carry out the method for determination of dilute ethanol-soluble extractives (General rule 5006).

Storage: Refrigerate or store in a cool and dry place, and protect from moisture.
Usage: Phlegm-dispelling medicinal (Cold-phlegm warming and resolving medicinal).
Dosage: 3~10 g.

SMILACIS GLABRAE RHIZOMA
土茯苓
Tu Fu Ling / Tu Fu Ling
Smooth Greenbrier Rhizome

Smooth greenbrier rhizome is the dried rhizome of *Smilax glabra* Roxb. (Fam. Liliaceae).
It contains not less than 5.0% of dilute ethanol-soluble extractives, not less than 5.0% of water extractives and not less than 0.45% of astilbin.

Description: Irregularly masses or subcylindrical, with knob-like protuberance, 5~22 cm in length. Externally yellowish-brown or grayish-brown, slightly lustrous, lumpy, remained with stiff fibrous roots, apex with scars of stem, some bark with irregularly fissured. Texture hard. Odor, slight; taste slightly sweet and astringent.

Microscopic identification:
1. **Transverse section:** Lower epidermis composed of 3~5 layers of cells, yellowish-brown, arranged densely, with thickened and lignified walls, some with pits. Cortex scattered with large mucilage cells, containing raphides of calcium oxalate. Pericycle scattered with collateral vascular bundles, relatively densely close to the center. Xylem usually contains 2 large vessels and numbers of small vessels; phloem contains some fibers. Parenchymatous cells contain numerous starch granules.
2. **Powder:** Pale brown. Simple starch granules subrounded, 8~48 μm in diameter, hilum slit-shaped, Y-shaped, cruciate or stellate, large granules with distinct striations; compound granules composed of 2~4 components. Raphides of calcium oxalate scattered or in bundles, 40~180 μm in length. Stone cells elongated-rounded, subsquare, subpolygonal, rectangular or subtriangular, 25~128 μm in diameter, walls 8~48 μm thick, some varying in thickness, pit canals mostly fine and branched. Fibers fusiform, short ones stone cell-shaped, mostly one end blunt-rounded and tapered at the other end, 22~72 μm in diameter, with walls extremely thickened, up to about 35 μm thick, some with walls varying in thickness or slightly thin at one side, pit canals short and dense, lumina vary in width. Bordered-pitted vessels up to about 48 μm in diameter, bordered pits mostly elongated laterally in scalariform; spiral and bordered-pitted tracheids occasionally found. Endodermal cells in fibrous roots occasionally visible, long strip-shaped or rectangular, up to about 50 μm in diameter, walls extremely thickened and lignified on three sides and thin on one side, pit canals long and branched irregularly.

Thin layer chromatographic identification test (General rule 1010.3):
1. Sample solution: Add 1.0 g of powdered sample to 20 mL of methanol, ultrasonicate for 30 minutes, filter and use the filtrate.
2. Reference drug solution: Use 1.0 g of the reference drug as the same method described above.
3. Reference standard solution: Weigh accurately a quantity of astilbin and dissolve in methanol to produce a solution containing 0.1 mg per mL.
4. Procedure: Use silica gel F_{254} as the coating substance and a solution of toluene, ethyl acetate, and formic acid (13:32:9) as the developing solvent. Apply 5 μL of each of the above solutions to the plate. Once the top of the solvent rise to about 5~10 cm from the origin, dry in air, spray with a solution of aluminium chloride in ethanol ($AlC1_3$/EtOH TS) and stand for 5 minutes. Examine under ultraviolet light at 365 nm. The spots in the chromatogram obtained from the sample solution correspond in R_f values and color to the spots in the chromatogram obtained from the reference drug solution and the reference standard solution.

Impurities and other requirements:
1. Loss on drying: Not more than 15.0% under heating at 105℃ for 5 hours (General rule 5008).
2. Total ash: Not more than 5.0% (General rule 5004).
3. Acid-insoluble ash: Not more than 1.0% (General rule 5004).

Assay:
1. Astilbin:
   (1) Mobile phase: A solution of methanol and 0.1% glacial acetic acid (39:61). The ratio of the solution varies as required.
   (2) Reference standard solution: Weigh accurately a quantity of astilbin and dissolve in 60% methanol to produce a solution containing 0.2 mg per mL.
   (3) Sample solution: Weigh accurately 0.8 g of powdered sample, transfer to a round-bottom flask, accurately add 100 mL of 60% methanol and weigh. Heat under reflux for 1 hour, cool and weigh again, replenish the loss of solvent with 60% methanol and mix well. Filter and use the successive filtrate.

(4) Chromatographic system: The liquid chromatography is equipped with an ultraviolet absorption photometer (wavelength: 291 nm) and a column packed with octadecylsilanized silica gel. The number of theoretical plates of the peak of astilbin should not be less than 5,000.
(5) Procedure: Inject accurately 10 μL of each of the reference standard solution and the sample solution into the liquid chromatography apparatus, and calculate the content.

2. Water extractives: Carry out the method for determination of water extractives (General rule 5006).
3. Dilute ethanol extractives: Carry out the method for determination of dilute ethanol-soluble extractives (General rule 5006).

Storage: Refrigerate or store in a cool and dry place.
Usage: Heat-clearing medicinal (Heat-clearing and detoxcating medicinal).
Dosage: 15~60 g.

SOJAE SEMEN PREPARATUM
淡豆豉
Dan Dou Chih / Dan Dou Chi
Fermented Soybean

Fermented soybean is the fermented preparation obtained from the ripe seed of *Glycine max* (L.) Merr. (Fam. Leguminosae).
It contains not less than 12.0% of dilute ethanol-soluble extractives and not less than 12.0% of water extractives.

Description: Ellipsoidal, slightly flattened, 0.6~1 cm in length, 3~6 mm in width. Externally black, dull, with irregular wrinkles and a sallow membrane, one side with a strip-shape hilum, micropyle indistinct, testa mostly loose, some testa exfoliated to expose brown kernel, without endosperm. Texture soft, fracture brown-black, with tempeh odor.

Thin layer chromatographic identification test (General rule 1010.3):
1. Sample solution: Add 15.0 g of broken sample to a quantity of water, decoct for about 1 hour, filter and evaporate to dryness, dissolve the residue in 1 mL of ethanol.
2. Reference drug solution: Use 15.0 g of the reference drug as the same method described above.
3. Procedure: Use silica gel F_{254} as the coating substance and a solution of toluene, ethyl formate and formic acid (5:4:1) as the developing solvent. Apply 10~20 μL of each of the above solutions to the plate. Once the top of the solvent rise to about 5~10 cm from the origin, dry in air. Examine under the ultraviolet light at 365 nm. The spots in the chromatogram obtained from the sample solution correspond in R_f values and color to the spots in the chromatogram obtained from the reference drug solution.

Impurities and other requirements:
1. Loss on drying: Not more than 14.0% under heating at 105℃ for 5 hours (General rule 5008).
2. Total ash: Not more than 8.0% (General rule 5004).
3. Acid-insoluble ash: Not more than 2.0% (General rule 5004).

Assay:
1. Water extractives: Carry out the method for determination of water extractives (General rule 5006).
2. Dilute ethanol extractives: Carry out the method for determination of dilute ethanol-soluble extractives (General rule 5006).

Storage: Refrigerate or store in a cool and dry place, and protect from insects.
Usage: Exterior-releasing medicinal (Wind-heat dispersing medicinal).
Dosage: 6~12 g.

SOPHORAE FLAVESCENTIS RADIX
苦參
Ku Shen / Ku Shen
Lightyellow Sophora Root

Lightyellow sophora root is the dried root of *Sophora flavescens* Ait. (Fam. Leguminosae).
It contains not less than 17.0% of dilute ethanol-soluble extractives, not less than 14.0% of water extractives and not less than 1.2% of the total amount of matrine and oxymatrine.

Description: Long cylindrical, apex swollen, irregular, remained with stem base, usually branched in lower part, 10~30 cm in length, 1~5 cm in diameter. Externally pale yellow or yellowish-brown, with distinct longitudinal wrinkles, lenticels protuberant and inward. Cork thin, texture hard, uneasily broken, fracture whitish-yellow, with distinct cambium ring. Odor, sharp; taste extremely bitter. Sliced pieces oblique, varying in size and shape, 2~5 cm in length, 1~2 cm in width, 2~5 mm thick, fracture whitish-yellow, with annular cambium ring and radial striations.

Microscopic identification:
1. **Transverse section:** Cork composed of 6~12 rows of flat cells, occasionally fallen off. Cortex composed of about 20~30 rows of parenchymatous cell, vascular bundles scattered, containing prisms of calcium oxalate and starch granules. Phloem usually contains fibers in bundles, intrafascicular cambium indistinct. Xylem branches into 2~4 lines

outwards, vessels 1~2 rows, 30~120 μm in diameter, reticulate and bordered-pitted vessels are visible, with 4~15 rows of rays. Pith in the center, scattered with a few of vessels and vascular bundles.

2. **Powder:** Pale yellow. Parenchymatous cells subrounded to subsquare or moniliform, containing crystals of calcium oxalate, rhombic or polygonal, starch granules also present, simple granules subrounded or ovate; compound granules numerous, composed of 2~10 components. Cork cells polygonal, pale brown to brown. Stone cells occasionally found, subrectangular, with thick walls. Vessels mainly bordered-pitted. Fibers and crystal fibers numerous, slender in a bundle, about 12~30 μm in diameter.

Thin layer chromatographic identification test (General rule 1010.3):

1. Sample solution: Add 1.0 g of powdered sample to 10 mL of ethanol, ultrasonicate for 30 minutes, cool, filter, and make up the filtrate to 10 mL.
2. Reference drug solution: Use 1.0 g of the reference drug as the same method described above.
3. Procedure: Use silica gel F_{254} as the coating substance and the lower layer of a solution of dichloromethane, methanol and concentrated ammonia solution (5:0.6:0.3) below 10℃ as the developing solvent. Apply 5 μL of each of the above solutions to the plate. Once the top of the solvent rise to about 5~10 cm from the origin, dry in air. Spray with Dragendorff's spray reagent and a solutions of sodium nitrite in ethanol ($NaNO_2$/EtOH TS), examine under visible light. The spots in the chromatogram obtained from the sample solution correspond in R_f values and color to the spots in the chromatogram obtained from the reference drug solution.

Impurities and other requirements:

1. Loss on drying: Not more than 11.0% under heating at 105℃ for 5 hours (General rule 5008).
2. Total ash: Not more than 9.0% (General rule 5004).
3. Acid-insoluble ash: Not more than 3.0% (General rule 5004).
4. Total heavy metals: Not more than 10.0 ppm (General rule 3005).
5. Arsenic (As): Not more than 5.0 ppm (General rule 3006, 3049, 3050).

Assay:

1. Matrine and oxymatrine:
   (1) Mobile phase: A solution of acetonitrile, absolute ethanol and 3% phosphoric acid (80:10:10). The ratio varies as required.
   (2) Reference standard solution: Weigh accurately a quantity of matrine and oxymatrine and dissolve in a solution of acetonitrile and absolute ethanol (80:20) to produce a solution containing 50 μg and 0.15 mg per mL of each.
   (3) Sample solution: Weigh accurately 0.3 g of powdered sample, transfer to a conical flask with stopper, add 0.5 mL of concentrated ammonia solution, add accurately 20 mL of chloroform, stopper tightly and weigh, ultrasonicate for 30 minutes, cool, weigh again, replenish the loss of the weight with chloroform, mix well. Filter and transfer 5 mL of successive filtrate, accurately measured, to the pretreated neutral aluminium oxide column (100~200 mesh, 5.0 g, 1 cm in internal diameter). Elute with 20-mL quantities of chloroform, a solution of chloroform and methanol (7:3) successively, collect the eluates and evaporate to dryness. Transfer the residue to a 10-mL volumetric flask; add absolute ethanol to volume and mix well.
   (4) Chromatographic system: The liquid chromatography is equipped with an ultraviolet absorption photometer (wavelength: 220 nm) and a column packed with amino-bonded silica gel. The number of theoretical plates of the peak of matrine should not be less than 2,000.
   (5) Procedure: Inject accurately 5 μL of the reference standard solution and 5~10 μL of the sample solution into the liquid chromatography apparatus, and calculate the content.
2. Water extractives: Carry out the method for determination of water extractives (General rule 5006).
3. Dilute ethanol extractives: Carry out the method for determination of dilute ethanol-soluble extractives (General rule 5006).

Storage: Store in a cool and dry place, and protect from moisture.
Usage: Heat-clearing medicinal (Heat-clearing and dampness-drying medicinal).
Dosage: 4.5~9 g.

SOPHORAE IMMATURUS FLOS
槐米
Huai Mi / Huai Mi
Pagodatree Flower Bud

Pagodatree flower bud is the dried flower bud of *Sophora japonica* L. (Fam. Leguminosae).
It contains not less than 25.0% of dilute ethanol-soluble extractives, not less than 20.0% of water extractives and not less than 15.0% of rutin.

Description: Slightly ovate and long-ovate, 2~8 mm in length, 2~3 mm in diameter. Calyx mostly about 2/3 or less 1/2 of all, calyx tube yellowish-green or

grayish-brown, with longitudinal striations, apex 5-lobed, base slightly acute, occasionally with short pedicel. Corolla occurring above the calyx, flattened round, yellowish-white or brownish-yellow. Stamens 10 and pistil 1. Odor, slight; taste, slightly bitter.

Microscopic identification:

1. **Powder:** Pale yellowish-brown. Non-glandular hairs 1- to 6-celled, complete ones up to 709 μm in length, 7~23 μm in diameter, multicellular ones with extremely long apical cells, the apex gradually acute or short acute, wall up to 9 μm thick, with irregularly cutinized spiral striations, separated from cell walls, occasionally with small warty protuberance; lumens of non-glandular hairs with thin walls containing yellow contents. Pollen grains spheroidal, 14~22 μm in diameter, with 3 germinal pores, pores round and large, surface smooth. Hesperidin crystals scattered in parenchymatous cells, yellow hesperidin crystals visible after treatment with a solution of chloral hydrate (no heating), minute raphides crystals aggregated into fan-shaped. Prisms of calcium oxalate present in parenchymatous cells of sepals, elongated-biconical, 2~12 μm in diameter, up to 29 μm in length. Epidermal cells of sepals polygonal, walls straight or slightly curved, with non-glandular hairs or hair scars. Stomata anomocytic, with 4~8 subsidiary cells. Epidermal cells of petals and cells in inner walls of pollen sac are also visible.

Thin layer chromatographic identification test (General rule 1010.3):

1. Sample solution: Add 1.0 g of powdered sample to 15 mL of methanol, ultrasonicate for 30 minutes, filter and use the filtrate.
2. Reference drug solution: Use 1.0 g of the reference drug as the same method described above.
3. Reference standard solution: Weigh accurately a quantity of rutin and dissolve in methanol to produce a solution containing 1.0 mg per mL.
4. Procedure: Use silica gel F_{254} as the coating substance and a solution of *n*-butanol, glacial acetic acid and water (7:1:2) as the developing solvent. Apply 10 μL of each of the above solutions to the plate. Once the top of the solvent rise to about 5~10 cm from the origin, dry in air. Spray with a 10% solution of aluminum chloride in ethanol ($AlC1_3$/EtOH TS). Examine under the ultraviolet light at 254 nm. The spots in the chromatogram obtained from the sample solution correspond in R_f values and color to the spots in the chromatogram obtained from the reference drug solution and the reference standard solution.

Impurities and other requirements:

1. Total ash: Not more than 10.0% (General rule 5004).
2. Acid-insoluble ash: Not more than 4.0% (General rule 5004).

Assay:

1. Rutin:
   (1) Mobile phase: A solution of methanol and 1% glacial acetic acid (32:68). The ratio varies as required.
   (2) Reference standard solution: Weigh accurately a quantity of rutin and dissolve in methanol to produce a solution containing 0.1 mg per mL.
   (3) Sample solution: Weigh accurately 0.1 g of the powdered sample, transfer to a conical flask with stopper, accurately add 50 mL of methanol, weigh, ultrasonicate for 30 minutes, cool, weigh again, replenish the loss of the weight with methanol, mix well, filter, take 2 mL of the filtrate to a 10-mLvolumetric flask, add methanol to volume.
   (4) Chromatographic system: The liquid chromatography is equipped with an ultraviolet absorption photometer (wavelength: 257 nm) and a column packed with octadecylsilanized silica gel. The number of theoretical plates of the peak of rutin should not be less than 2,000.
   (5) Procedure: Inject accurately 10 μL of each of the reference standard solution and the sample solution into the liquid chromatography apparatus, and calculate the content.
2. Water extractives: Carry out the method for determination of water extractives (General rule 5006).
3. Dilute ethanol extractives: Carry out the method for determination of dilute ethanol-soluble extractives (General rule 5006).

Storage: Refrigerate or store in a cool and dry place, and protect from insects.
Usage: Blood-regulating medicinal (Hemostatic medicinal).
Dosage: 5~15 g.

SOPHORAE TONKINENSIS RADIX
山豆根
Shan Dou Gen / Shan Dou Gen
Vietnamese Sophora Root

Vietnamese sophora root is the dried root of *Sophora tonkinensis* Gapnep. (Fam. Leguminosae).
It contains not less than 15.0% of dilute ethanol-soluble extractives, not less than 16.0% of water extractives and not less than 0.70% of the total amount of matrine and oxymatrine.

Description: Slender or stout cylindrical, often curved, 30~50 cm in length, 1~5 cm in diameter, with some sparse rootlets, its scars or bud scars, apex remained with stem base, with longitudinal wrinkles, lenticels less, externally yellow to blackish-brown, cork easily exfoliated, with longitudinal wrinkles, fracture even, fibrous, wood dark yellow, xylem bundle arranged in ring, Odor, bean-like; taste, very bitter.

Microscopic identification:

1. **Transverse section:** Cork polygonal, composed of 6~12 layers of cells, pale brown or yellowish-brown in color, with thin or slightly thickened walls. The outer rows of cells in cortex containing prisms of calcium oxalate, scattered with lignified and thickened walls. Fiber bundles scattered in cortex and phloem, with lignified and thickened walls. Phloem undeveloped. Cambium arranged in a ring or indistinctly. Stele composed of vessels, xylem fibers and pith. Rays 1~8 layers wide, arranged radially. Bordered-pitted and reticulated vessels are found, mostly singly scattered or in groups. Starch granules occurred in parenchymatous cells, simple granules spheroidal or subspheroidal.
2. **Powder:** Pale yellow. Cork cells polygonal, pale brown or yellow in color. Fibers and crystal fibers present in bundles or distributed singly, 10~40 μm in diameter, with endings obtusely rounded, irregular striations seen on the surface view. The fiber surrounded by prisms of calcium oxalate, some forming crystal fibers. The crystal fibers subrounded, subrectangular or irregular in shape, with irregular lignified and thickened walls, 20~40 μm long, 15~35 μm in diameter. Vessels mainly reticulate and bordered-pitted, 150~360 μm long. Starch granules with indistinct striation and hilum, 4~30 μm in diameter.

Thin layer chromatographic identification test (General rule 1010.3):

1. Sample solution: Add 0.5 g of powdered sample to 10 mL of chloroform and 0.2 mL of concentrated ammonia solution, shake for 15 minutes, filter, evaporate to dryness; dissolve the residue in 0.5 mL of chloroform.
2. Reference drug solution: Use 0.5 g of the reference drug as the same method described above.
3. Reference standard solution: Weigh accurately a quantity of matrine and oxymatrine and dissolve in chloroform to produce a solution containing 1.0 mg per mL of each.
4. Procedure: Use silica gel F_{254} as the coating substance and a solution of chloroform, methanol and concentrated ammonia solution (4:1:0.1) as the developing solvent. Apply 1~2 μL of each of the sample solution and reference drug solution and 4~6 μL of the reference standard solution to the plate. Once the top of the solvent rise to about 5~10 cm from the origin, dry in air. Spray with modified Dragendorff's reagent. The orange-yellow spots in the chromatogram obtained from the sample solution correspond in R_f values and color to the spots in the chromatogram obtained from the reference drug solution and the reference standard solution.

Impurities and other requirements:

1. Loss on drying: Not more than 13.0% under heating at 105℃ for 5 hours (General rule 5008).
2. Total ash: Not more than 5.0% (General rule 5004).
3. Acid-insoluble ash: Not more than 1.0% (General rule 5004).

Assay:

1. Matrine and oxymatrine:
   (1) Mobile phase: A solution of acetonitrile, isopropanol and 3.0% phosphoric acid (80:5:15). The ratio varies as required.
   (2) Reference standard solution: Weigh accurately a quantity of matrine and oxymatrine and dissolve in mobile phase to produce a solution containing 20 μg and 150 μg per mL of each.
   (3) Sample solution: Weigh accurately 0.5 g of powdered sample, transfer to a conical flask with stopper, accurately add 50 mL of a solution of chloroform, methanol and concentrated ammonia solution (40:10:1), stopper tightly and weigh, stand for 30 minutes and weigh again, ultrasonicate for 30 minutes, and weigh again, replenish the loss of a solution of chloroform, methanol and concentrated ammonia solution (40:10:1), shake well, filter it. Measure accurately 10 mL of the filtrate, recover the solvent in vacuum to dryness at 40℃, dissolve the residue in a small quantity of methanol, transfer to 10-mL volumetric flask, add methanol to volume, mix well, filter, and use the filtrate.
   (4) Chromatographic system: The liquid chromatography is equipped with an ultraviolet absorption photometer (wavelength: 210 nm) and a column packed with amino-bonded silica gel. The number of theoretical plates of the peak of matrine should not be less than 4,000.
   (5) Procedure: Inject accurately 5 μL of each of the reference standard solution and the sample solution into the liquid chromatography apparatus, and calculate the content.
2. Water extractives: Carry out the method for determination of water extractives (General rule 5006).
3. Dilute ethanol extractives: Carry out the method for determination of dilute ethanol-soluble extractives (General rule 5006).

Storage: Store in a ventilated and dry place, and protect from insects.
Usage: Heat-clearing medicinal (Heat-clearing and detoxcating medicinal).
Dosage: 3~6 g.
Precaution and warning: Contraindicated in spleen-stomach deficiency cold and sloppy.

SPARGANII RHIZOMA
三稜
San Ling / San Ling
Common Burreed Tuber

Common burreed tuber is the dried tuber of *Sparganium stoloniferum* Buch.-Ham. (Fam. Sparganiaceae).
It contains not less than 4.0% of dilute ethanol-soluble extractives and not less than 7.0% of water extractives.

Description: Conical, slightly compressed, few fusiform, apex round and base acute, with marks pared with a knife, 3~6 cm in length, 2~4 cm in diameter. Externally yellowish-white or grayish-yellow, with numerous scars of fibrous root arranged in ring, the upper part with stem scars, the lateral with 3~5 symmetrical protrusions (bud scars). Texture heavy, compact, fracture yellowish-white, starchy. Odor, slight; taste, weak, slightly numb on chewing.

Microscopic identification:
1. **Transverse section:** Epidermal cells yellowish-brown or reddish-brown, cell boundaries faintly visible, epidermal cells occasionally abraded. Cortex cells irregular in shape, containing aerenchyma, with large intercellular spaces, scattered with secretory cells, containing yellowish-brown secretions. Endodermis composed of 1 layer of rectangular cells, arranged densely. Vascular bundles scattered in amphivasal concentric type. Phloem with thin walls, cells irregular in shape. Xylem vessels slightly lignified, 5~20 μm in diameter, mainly scalariform, pitted and reticulate. Fibers of vascular bundle sheath existed outside xylem. Parenchymatous cells of stele subrounded, 20~50 μm in diameter, scattered with secretory cells, containing yellowish-brown secretions and abundant starch granules.
2. **Powder:** Yellowish-white. Odor, slight; taste, slightly bitter, astringent and numb. Epidermal cells yellowish-brown or reddish-brown, intercellular spaces faintly visible. Cortex cells irregular in shape. Vessels slightly lignified, 5~20 μm in diameter, mainly pitted and reticulate. Fibers mostly in bundles, fusiform, slightly lignified. Parenchymatous cells of stele subrounded, 20~50 μm in diameter. Secretory cells subrounded, containing yellowish-brown secretions, 15~35 μm in diameter. Starch granules extremely small, subrounded or elliptical, with indistinct striations, simple granules mostly aggregated into masses; compound granules rare.

Thin layer chromatographic identification test (General rule 1010.3):
1. Sample solution: Add 2.0 g of powdered sample to 30 mL of ethanol, heat under reflux for 1 hour and filter. Evaporate the filtrate to dryness, and dissolve the residue in 2 mL.
2. Reference drug solution: Use 2.0 g of the reference drug as the same method described above.
3. Procedure: Use silica gel F_{254} as the coating substance and a solution of petroleum ether (30~60 ℃) and ethyl acetate (4:1) as the developing solvent. Apply 10 μL of each of the above solutions to the plate. Once the top of solvent rise to about 5~10 cm from the origin, dry in air, and examine under ultraviolet light at 365 nm. The spots in the chromatogram obtained from the sample solution correspond in R_f values and color to the spots in the chromatogram obtained from the reference drug solution.

Impurities and other requirements:
1. Loss on drying: Not more than 13.0% under heating at 105℃ for 5 hours (General rule 5008).
2. Total ash: Not more than 5.0% (General rule 5004).
3. Acid-insoluble ash: Not more than 2.0% (General rule 5004).

Assay:
1. Water extractives: Carry out the method for determination of water extractives (General rule 5006).
2. Dilute ethanol extractives: Carry out the method for determination of dilute ethanol-soluble extractives (General rule 5006).

Storage: Refrigerate or store in a cool and dry place, and protect from insects.
Usage: Blood-activating and stasis-dispelling medicinal.
Dosage: 4.5~9 g.
Precaution and warning: Contraindicated in pregnancy.

SPATHOLOBI CAULIS
雞血藤
Ji Sie Teng / Ji Xie Teng
Suberect Spatholobus Lianoid Stem

Suberect Spatholobus lianoid stem is the dried lianoid stem of *Spatholobus suberectus* Dunn (Fam. Leguminosae).
It contains not less than 6.0% of dilute ethanol-soluble extractives and not less than 5.0% of water extractives.

Description: Slightly flattened cylindrical, slightly curved, 1.5~7 cm in diameter, with three broad longitudinal furrows. Sliced pieces usually cut into

oblong lump, 15~30 cm in length, or irregular slices, 0.3~1.5 cm thick. Cork grayish-brown or reddish-brown when the cork exfoliated. Texture compact and hard, uneasily broken. In the transversely cut surface, xylem reddish-brown or brown, showing distinctly numerous pores of vessels; phloem with blackish-brown resinous secretion, arranged alternately with xylem, forming 3~10 eccentric semi-circular or circular rings; pith small, inclined to one side. Odor, slight; taste, bitter and astringent.

Microscopic identification:

1. **Transverse section:** Cork composed of several layers of cork cells, containing brownish-red contents. Cortex relatively narrow, scattered with stone cell groups, lumen filled with brownish-red contents; parenchymatous cells contain prisms of calcium oxalate. Phloem arranged alternately with xylem in several whorls forming abnormal vascular bundles. Sclerenchymatous cell layer present at the outer side of phloem, composed of stone cell groups and fiber bundles; rays mostly compressed; secretory cells extremely numerous, filled with brownish-red contents, usually several to dozens arranged tangentially into layers; fiber bundles relatively numerous, unlignified to slightly lignified, surrounded by cells containing prisms of calcium oxalate, forming crystal fibers, walls of crystal-containing cells lignified and thickened; stone cell groups scattered. Xylem rays occasionally contain brownish-red contents; vessels singly scattered, subrounded, up to about 400 μm in diameter; xylem fiber bundles also form crystal fibers; few xylem parenchymatous cells contain brownish-red contents.
2. **Powder:** Brownish-red. Stone cells rectangular, subrounded, subtriangular or subsquare, 14~109 μm in diameter, wall 3~26 μm thick, striations and pit canals distinct, some lumens contain reddish-brown contents or prisms of calcium oxalate. Fibers slender, 6~25 μm in diameter, wall 3~8 μm thick, unlignified or lignified, mostly broken, the sectional ends truncate or slit to several strips, primary walls easily separated, with clefts on the surface, some slit longitudinally, few partially swollen into lacerate shape, pit canals and lumens indistinct. Some fiber bundles surrounded by cells containing prisms of calcium oxalate, forming crystal fibers, walls of crystal-containing cells unevenly lignified and thickened. Secretory cells and phloem rays usually arranged vertically, cell boundaries indistinct, lumens contain yellowish-brown or reddish-brown contents. Bordered-pitted vessels huge, mostly broken, intact ones 20~450 μm in diameter, bordered pits arranged densely, some pits with indistinct margins, pit apertures slit-shaped or elongated-oblong, few elongated and several linked; some vessel lumens contain brown contents. Cork cells singly scattered or several in groups, polygonal in surface view, anticlinal walls unevenly thickened and lignified, with slit-shaped pits on the surface, some lumens contain brown contents; subrectangular in sectional view, walls unevenly thickened or thickened on three sides and thin on one side. Xylem ray cells, brown masses and prisms of calcium oxalate also visible.

Thin layer chromatographic identification test (General rule 1010.3):

1. Sample solution: Add 1.0 g of powdered sample to 15 mL of methanol, ultrasonicate for 30 minutes, filter and use the filtrate.
2. Reference drug solution: Use 1.0 g of the reference drug as the same method described above.
3. Reference standard solution: Weigh accurately a quantity of formononetin and dissolve in methanol to produce a solution containing 1.0 mg per mL.
4. Procedure: Use silica gel F_{254} as the coating substance and a solution of ethyl acetate, methanol and water (10:2:1) as the developing solvent. Apply 10 μL of each of the above solutions to the plate. Once the top of the solvent rise to about 5~10 cm from the origin, dry in air. The spots in the chromatogram obtained from the sample solution correspond in R_f values and color to the spots in the chromatogram obtained from the reference drug solution and the reference standard solution.

Impurities and other requirements:

1. Total ash: Not more than 4.0% (General rule 5004).
2. Acid-insoluble ash: Not more than 3.0% (General rule 5004).

Assay:

1. Water extractives: Carry out the method for determination of water extractives (General rule 5006).
2. Dilute ethanol extractives: Carry out the method for determination of dilute ethanol-soluble extractives (General rule 5006).

Storage: Store in a ventilated and dry place, and protect from moisture and insects.
Usage: Blood-regulating medicinal (Blood-activating and stasis-dispelling medicinal).
Dosage: 9~15 g.

STEMONAE RADIX
百部
Bai Bu / Bai Bu
Stemona Root Tuber

Stemona root tuber is the dried root tuber of *Stemona sessilifolia* (Miq.) Miq., *Stemona japonica* (Bl.) Miq. or *Stemona tuberosa* Lour. (Fam. Stemonaceae).

It contains not less than 55.0% of dilute ethanol-soluble extractives and not less than 55.0% of water extractives.

Description:

1. Root tuber of *Stemona sessilifolia*: Single or many in cluster, fusiform, the upper end relatively slender, shrunken and curved, 5~12 cm in length, 0.5~1 cm in diameter. Externally yellowish-white or pale brownish-yellow, with irregular longitudinal deep furrows and occasionally transverse wrinkles. Texture fragile, easily broken, softened when hygroscopic, fracture horny, pale yellowish-brown or yellowish-white, bark broad, stele compressed. Odor, slight; taste, sweet then bitter.
2. Root tuber of *Stemona japonica*: Single or many in cluster. Two ends slightly thinned. Externally mostly with irregular folds and transverse wrinkles.
3. Root tuber of *Stemona tuberosa*: Stout, 12~25 cm in length, 0.8~2 cm in diameter. Externally pale brown to grayish-brown, with shallow wrinkles. Texture compact, fracture yellowish-white, stele large, pith whitish.

Microscopic identification:

1. **Transverse section:**
   (1) Root tuber of *Stemona sessilifolia*: Velamen composed of 3~4 layers of cells, walls lignified and thickened with dense and fine striations. Cortex broad, the outer layer cells arranged in order, the endothelium distinct. In stele, phloem bundles and xylem bundles arranged alternately; unlignified fibers singly scattered or 2~3 in bundles, locating in the inner side of phloem bundles; xylem vessels subpolygonal, up to 48 μm in radial diameter, up to 88 μm in tangential diameter, occasionally vessels singly scattered or 2~3 in groups, distributing near the margin of pith, arranged in 2 whorls. Pith scattered with small fibers, singly scattered or 2~3 in bundles.
   (2) Root tuber of *Stemona japonica*: Velamen composed of 3~6 layers of cells. Phloem fibers lignified. Vessels relatively large, up to 184 μm in radial diameter, usually penetrating into pith, mostly arranged in 3 whorls.
   (3) Root tuber of *Stemona tuberosa*: Velamen composed of 3 layers of cells, walls extremely lignified and without fine striations, the inner walls of the inner layers extremely thickened. Cortex scattered with fibers in the outer part, with slightly lignified walls. In stele, phloem bundles 36~40; xylem vessels rounded-polygonal, up to 107 μm in diameter, each xylem bundle composed of xylem fibers and slightly lignified xylem parenchymatous cells linking into a ring. Pith with few fibers, usually scattered singly. Parenchymatous cells contain gelatinized starch granules.
2. **Powder:**
   (1) Root tuber of *Stemona sessilifolia*: Pale yellow to yellowish-brown. In surface view, velamen cells rectangular or polygonal, walls lignified, with distinct, dense and fine striations. Vessels with simple oblique pits or pit borders. Parenchymatous cells adjacent vessels rectangular in shape, containing large simple pits. Raphides of calcium oxalate rare, up to 60 μm in length.
   (2) Root tuber of *Stemona japonica*: Yellowish-brown. Vessels relatively large, mostly up to 64 μm in diameter. Xylem fibers up to 32 μm in diameter.
   (3) Root tuber of *Stemona tuberosa*: Yellowish-brown. In surface view, velamen cells subpolygonal or subsquare, walls slightly lignified and thickened, without dense striations; the inner walls extremely thickened in sectional view. Bordered-pitted vessels with relatively large pits, a few elongatively arranged in reticulate or scalariform. Xylem fibers 16~60 μm in diameter, occasionally containing transverse septa. Parenchymatous cells contain starch granules.

Identification:

1. Check alkaloid: Take 5.0 g of powdered sample, add 50 mL of 80% ethanol, heat under reflux for 1 hour, filter and evaporate the filtrate to remove ethanol, the residue add ammonia solution and adjust pH value to 10~11 (General rule 1009), extract by shaking with 5 mL of chloroform, evaporate the chloroform layer to dryness, dissolve the residue in 5 mL of 1% hydrochloric acid, filter. Divided the filtrate into two parts, one filtrate add modified Dragendorff's reagent, an orange-red precipitate is produced; the other one add a solution of silicotungstic acid in water, a milky precipitate is produced.

Impurities and other requirements:

1. Loss on drying: Not more than 15.0% under heating at 105℃ for 5 hours (General rule 5008).
2. Total ash: Not more than 8.0% (General rule 5004).
3. Acid-insoluble ash: Not more than 2.0% (General rule 5004).

Assay:

1. Water extractives: Carry out the method for determination of water extractives (General rule 5006).
2. Dilute ethanol extractives: Carry out the method for determination of dilute ethanol-soluble extractives (General rule 5006).

Storage: Refrigerate or store in a cool and dry place, and protect from moisture and insects.
Usage: Phlegm-dispelling medicinal (Cough-suppressing and panting-calming medicinal).
Dosage: 3~10 g.

STRYCHNI SEMEN
馬錢子
Ma Cian Zih / Ma Qian Zi
Nux Vomica

Nux vomica is the dried ripe seed of *Strychnos nux-vomica* L. (Fam. Loganiaceae).
It contains not less than 8.0% of dilute ethanol-soluble extractives, not less than 13.0% of water extractives, among 1.20~2.20% of strychnine and not less than 0.80% of brucine.

Description: Flattened button-shaped, edge protuberant, one side slightly dented, the other side slightly protuberant, 1~3 cm in diameter, 0.3~0.6 cm thick. Externally grayish-brown or grayish-green, densely covered with silver-gray hairs, arranged radially, silky-lustrous. The center of dented surface with a protuberant dot-like hilum, edge with a protuberant rib and slightly protuberant micropyle. Texture hard, uneasily broken. Kernel pale yellow, 2 cotyledons, cordate, with 5~7 veins. Odorless; taste, extremely bitter, with hypertoxicity.

Microscopic identification:
1. **Transverse section:** Epidermal cells differentiated into unicellular non-glandular hairs, extended obliquely, 500~1,000 μm in length, 25 μm in width, wall thick and strongly lignified, with longitudinal striations, the apex obtuse-rounded, the base enlarged, with pits and pit canals, lumen subrounded in sectional view. Brown parenchymatous cells existed in the inner layer of testa. Endosperm cells polygonal, wall about 25 μm thick, containing aleurone grains and fatty oil, aleurone grains 15~40 μm in diameter.
2. **Powder:** Grayish-yellow. Non-glandular hairs of testa mostly broken, about 1,100 μm in length, 25~75 μm in diameter, wall thick and strongly lignified, the base stone cell like. Unicellular non-glandular hairs cylindrical, lumen containing brown contents. Endosperm cells subrounded or polygonal, pale yellow, wall thick with dense pit canals, intercellular layer undulately curved, containing aleurone grains, fatty oil and pigments.

Thin layer chromatographic identification test (General rule 1010.3):
1. Sample solution: Add 1.0 g of powdered sample to 10 mL of methanol, ultrasonicate for 30 minutes, filter and use the filtrate.
2. Reference drug solution: Use 1.0 g of the reference drug as the same method described above.
3. Procedure: Use silica gel F_{254} as the coating substance and a solution of toluene, acetone, ethanol and concentrated ammonia solution (4:5:0.6:0.4) as the developing solvent. Apply 10 μL of each of the above solutions to the plate. Once the top of the solvent rise to about 5~10 cm from the origin, dry in air. Spray with Dragendorff's spray reagent and a solution of sodium nitrite ($NaNO_2$ TS), heat at 105℃ until the spots become visible, and examine under visible light. The spots in the chromatogram obtained from the sample solution correspond in R_f values and color to the spots in the chromatogram obtained from the reference drug solution.

Impurities and other requirements:
1. Loss on drying: Not more than 13.0% under heating at 105℃ for 5 hours (General rule 5008).
2. Total ash: Not more than 3.0% (General rule 5004).
3. Acid-insoluble ash: Not more than 1.0% (General rule 5004).

Assay:
1. Strychnine and brucine:
   (1) Mobile phase: A solution of acetonitrile and a solution of equal quantities of 0.01 mol/L sodium 1-heptanesulfonate solution and 0.02 mol/L potassium dihydrogen phosphate solution (adjust pH value to 2.8 with 10% phosphoric acid) (21:79). The ratio varies as required.
   (2) Reference standard solution: Weigh accurately 6.0 mg of strychnine and 5.0 mg of brucine, transfer sparsely to a 10-mL volumetric flask, add chloroform to volume and mix well. Measure accurately 2 mL of each, transfer to a 10-mL volumetric flask, add methanol to volume, and mix well (containing 0.12 mg and 0.1 mg per mL of each).
   (3) Sample solution: Weigh accurately 0.6 g of powdered sample, transfer to a conical flask with stopper, add 3 mL of sodium hydroxide solution, mix well, and stand for 30 minutes. Add accurately 20 mL of chloroform, stopper tightly and weigh, heat under reflux for 2 hours, cool, weigh again, replenish the loss of the weight with chloroform, and mix well. Filter with filter paper sprayed with a small quantity of anhydrous sodium sulfate. Accurately measure 3 mL of the successive filtrate in a 10-mL volumetric flask, add methanol to volume, and mix well.
   (4) Chromatographic system: The liquid chromatography is equipped with an ultraviolet absorption photometer (wavelength: 260 nm) and a column packed with octadecylsilanized silica gel. The

number of theoretical plates of the peak of strychnine should not be less than 5,000

(5) Procedure: Inject accurately 10 μL of each of the reference standard solution and the sample solution into the liquid chromatography apparatus, and calculate the content.

2. Water extractives: Carry out the method for determination of water extractives (General rule 5006).
3. Dilute ethanol extractives: Carry out the method for determination of dilute ethanol-soluble extractives (General rule 5006).

Storage: Store in a cool and dry place, and protect from moisture.
Usage: Wind-dampness-dispelling medicinal.
Dosage: 0.3~0.6 g.
Precaution and warning: Unprocessed one toxic, avoid using unprocessed one, overdosing and taking for a long term. Forbidden during pregnancy.

TALCUM
滑石
Hua Shih / Hua Shi
Talc

Talc is a mineral of silicates of talcum group, containing mainly hydrated magnesium silicate [$Mg_3(Si_4O_{10})(OH)_2$]. It is formed from ultrabasic rocks via metapepsis, collected and removed from foreign matter.

Description: Aggregates of dense or scaly masses, irregular or flattened cuboid, white, yellowish-white or pale bluish-gray. Externally with pearl-like luster, translucent or opaque. Texture soft and fine, smooth and unctuous on touching, nonhygroscopic and nondisintegrated in water. White powder can be scraped off with a finger nail. Odorless; tasteless, with a cooling sensation.

Microscopic identification:
1. **Powder:** White or almost white. Fine and sandless powder, unctuous on touching.

Identification:
1. Weigh accurately 500 mg of powdered sample, add accurately 200 mg of anhydrous sodium carbonate and 2 g of anhydrous potassium carbonate, grind and transfer to a platinum crucible, heat until completely melted, cool. Apply 50 mL of hot water to transfer the melt to an evaporating dish or a beaker, add a quantity of hydrochloric acid until not bubble up, and add extra 10 mL of hydrochloric acid, heat in a water bath until dryness, cool. Add 20 mL of water, boil and filter, the residue is insoluble silicon dioxide. Use the filtrate and add about 2 g ammonium chloride and 5 mL of ammonium. If precipitate is produced, filter, and add a solution of sodium tertiary phosphate to the filtrate, and white crystals precipitate of ammonium magnesium phosphate is produced.

Impurities and other requirements:
1. Loss on drying: Not more than 0.5% under heating at 105℃ for 5 hours (General rule 5008).

Storage: Store in a dry place.
Usage: Dampness-draining diuretic medicinal.
Dosage: 10~20 g, used an appropriate amount for external use.

TARAXACI HERBA
蒲公英
Pu Gong Ying / Pu Gong Ying
Mongolian Dandelion Herb

Mongolian dandelion herb is the dried herb of *Taraxacum mongolicum* Hand.-Mazz. or *Taraxacum formosanum* Kitamura and similar species (Fam. Compositae).
It contains not less than 13.0% of dilute ethanol-soluble extractives and not less than 15.0% of water extractives.

Description: Crumpled and rolled masses. Main root conical, frequently curved, 3~10 cm in length, with lateral roots and fibrous roots; externally grayish-brown, with deeply longitudinal furrows and wrinkles; root stock with brown or yellowish-white hairs, some fallen off. Leaves greenish-brown or dark gray, crumpled in a mass or rolled into strips, apex acute or obtuse, margin lobate or pinnatifid; base becoming narrow downwards to petiole-shape; midrib of lower surface distinct. Scapes relatively slender; heads terminal; corolla yellowish-brown; achenes numerous with yellowish-white pappi. Odor, slight; taste, slightly bitter.

Microscopic identification:
1. **Transverse section:**
   (1) Root: 1 layered epidermis covered with cuticle, cells rectangular or square. Cork composed of several rows of yellowish-brown cells, subrectangular or subpolygonal. Phloem broad, composed of parenchymatous cells, sieve tube groups and laticiferous tube groups; parenchymatous cells subrounded, suboblong, subrectangular or subpolygonal, with distinct intercellular spaces, containing inulin; laticiferous tube groups surrounded by small cells, scattered, arranged in several interrupted whorls. Cambium in a ring, about 4~7 rows of cells. Xylem composed of vessels, ray cells and parenchymatous cells; vessels relatively large, scattered; rays indistinct; xylem parenchymatous cells subrectangular, subpolygonal or suboblong, with distinct

intercellular spaces, containing inulin. Pith composed of parenchymatous cells in the center.

2. **Powder:** Grayish-brown. Both upper and lower epidermal cells of leaf contain non-glandular hairs in surface view, composed of 3~9 cells, lower epidermis with relatively numerous stomata, with 3~6 subsidiary cells. Laticiferous tube groups of roots contain pale yellow secretions in longitudinal view, cells subrectangular or suboblong. Vessels mainly annular and scalariform, about 10~70 μm in diameter. Inulin varying in size, subfan-shaped or subrounded.

Thin layer chromatographic identification test (General rule 1010.3):

1. Sample solution: Add 1.0 g of powdered sample to 20 mL of methanol, ultrasonicate for 30 minutes, filter, evaporate the filtrate to dryness, dissolve the residue in 10 mL of water, extract shaking for two times, each time with 10 mL of ethyl acetate, combine the ethyl acetate extracts and evaporate to dryness, dissolve the residue in 1 mL of methanol.
2. Reference drug solution: Use 1.0 g of the reference drug as the same method described above.
3. Reference standard solution: Weigh accurately 5.0 mg of caffeic acid and dissolve in 10 mL of methanol to produce a solution containing 0.5 mg per mL.
4. Procedure: Use silica gel F_{254} as the coating substance and the supernatant of butyl acetate, formic acid and water (7:2.5:2.5) as the developing solvent. Apply 6 μL of each of the above solutions to the plate. Once the top of the solvent rise to about 5~10 cm from the origin, dry in air. Examine under the ultraviolet light at 365 nm. The spots in the chromatogram obtained from the sample solution correspond in R_f values and color to the spots in the chromatogram obtained from the reference drug solution and the reference standard solution.

Impurities and other requirements:

1. Loss on drying: Not more than 13.0% under heating at 105℃ for 5 hours (General rule 5008).
2. Total ash: Not more than 20.0% (General rule 5004).
3. Acid-insoluble ash: Not more than 8.0% (General rule 5004).

Assay:

1. Water extractives: Carry out the method for determination of water extractives (General rule 5006).
2. Dilute ethanol extractives: Carry out the method for determination of dilute ethanol-soluble extractives (General rule 5006).

Storage: Refrigerate or store in a cool and dry place, and protect from mold and insects.

Usage: Heat-clearing medicinal (Heat-clearing and detoxcating medicinal).
Dosage: 9~15 g.

TAXILLI HERBA
桑寄生
Sang Ji Sheng / Sang Ji Sheng
Chinese Taxillus Herb

Chinese taxillus herb is the dried stem and branch with leaf of *Taxillus chinensis* (DC.) Danser (Fam. Loranthaceae).
It contains not less than 7.0% of dilute ethanol-soluble extractives and not less than 7.0% of water extractives.

Description: Stems cylindrical, 3~15 mm in diameter. Externally gray or purplish-brown, with branches and scars of branches or leaves, with numerous fine lenticels, young branches with brown-red pubescences. Texture hard, easily broken, fracture of wood split-shaped. Occasionally with leaves, leaves frequently crumpled, oval as whole, margin entire, brown, coriaceous, young leaves covered with fine pubescences. Odor, slight; taste, astringent.

Microscopic identification:

1. **Transverse section:**
   (1) Stem: Cork composed of about 10 layers of cork cells, usually containing brown contents, occasionally with lenticels. Cortex with cells tangentially elongated; scattered with subsquare or rectangular stone cells, walls mostly three-side thickened, 1 side relatively thin, containing prisms of calcium oxalate; fiber bundles arranged in a ring in pericycle and in the inner side of cortex. Phloem narrow. Cambium indistinct. Xylem occupied the most parts of the stem, vessels singly scattered or 2~3 in groups, surrounded by xylem fibers and xylem parenchymatous cell; xylem rays 1~4 layers of cells wide, occasionally forming stone cells, containing prisms. Pith with cell walls slightly thickened, with distinct pits; stone cells scattered in groups, also containing prisms. Parenchymatous cells contain starch granules.
2. **Powder:** Pale yellow. Stone cells subsquare, subrectangular, subtriangular or conchoidal, 14~76 μm in diameter, walls of cells mostly three-side thickened, lumen near one side, containing prisms of calcium oxalate and yellowish-brown or reddish-brown masses, some prisms embedded in brown masses. Prisms of calcium oxalate square, rectangular, short-cylindrical or polyhedral, 3~30 μm in diameter and up to 38 μm in length. Clusters of calcium oxalate scattered in leaf parenchymatous cells, 8~25 μm in diameter. Stellate hairs overlapped, pale yellow or yellow,

intact one 3~5 overlapped, trifurcately or tetrafurcately branched, branches mostly curved, with walls slightly thickened. Epidermal cells of leaf yellowish-brown in surface view; mesophyll cells yellowish-brown, occasionally containing prisms and clusters of calcium oxalate or its symbionts. Pericycle fibers 14~35 μm in diameter, with walls extremely thickened, primary walls broken, usually with longitudinal slits on the surface. Xylem fibers 10~27 μm in diameter, wall 3~7 μm thick, with pit canals sparsely. Bordered-pitted vessels 25~50 μm in diameter, bordered pits polygonal, arranged densely, occasionally with reticular three-side thickened; reticulate, scalariform or reticular-spiral vessels occasionally visible. Xylem parenchymatous cells, pith cells, cork cells and starch granules also present.

Thin layer chromatographic identification test (General rule 1010.3):

1. Sample solution: Add 2.0 g of powdered sample to 10 mL of methanol, ultrasonicate for 30 minutes, filter and use the filtrate.
2. Reference drug solution: Use 2.0 g of the reference drug as the same method described above.
3. Reference standard solution: Weigh accurately a quantity of quercitrin and dissolve in methanol to produce a solution containing 1.0 mg per mL.
4. Procedure: Use silica gel F_{254} as the coating substance and a solution of ethyl acetate, 2-butanone, formic acid and water (24:3.6:1.5:0.9) as the developing solvent. Apply 5 μL of the sample solution and reference drug solution and 2 μL of the reference standard solution to the plate. Once the top of the solvent rise to about 5~10 cm from the origin, dry in air. Spray with a 2.5% solution of aluminum chloride in ethanol ($AlC1_3$/EtOH TS), examine under the ultraviolet light at 365 nm. The spots in the chromatogram obtained from the sample solution correspond in R_f values and color to the spots in the chromatogram obtained from the reference drug solution and the reference standard solution.

Impurities and other requirements:

1. Loss on drying: Not more than 13.0% under heating at 105℃ for 5 hours (General rule 5008).
2. Total ash: Not more than 10.0% (General rule 5004).
3. Acid-insoluble ash: Not more than 2.0% (General rule 5004).

Assay:

1. Water extractives: Carry out the method for determination of water extractives (General rule 5006).
2. Dilute ethanol extractives: Carry out the method for determination of dilute ethanol-soluble extractives (General rule 5006).

Storage: Store in a ventilated and dry place, and protect from mold and insects.
Usage: Wind-dampness-dispelling medicinal.
Dosage: 9~15 g.

TETRAPANACIS MEDULLA
通草
Tong Cao / Tong Cao
Ricepaperplant Pith

Ricepaperplant pith is the dried pith in the stem of *Tetrapanax papyriferus* (Hook.) K. Koch (Fam. Araliaceae).

Description: Cylindrical, 20~40 cm in length, 1~2.5 cm in diameter. Externally white or pale yellow, with shallow longitudinal furrows. Texture light, soft and loose, slightly elastic, easily broken, fracture even, with silvery luster, with a hollow of 0.3~1.5 cm in diameter or translucent membrane in the middle part, arranged in scalariform in longitudinally cut surface, solid ones visible occasionally (only a tiny small pieces of stem pith). Odorless and tasteless.

Microscopic identification:

1. **Transverse section:** All cells are parenchymatous cells, elliptical, subrounded or subpolygonal, wall thin, occasionally with pits, the outer cells smaller, some cells contain clusters of calcium oxalate, 15~64 μm in diameter.

Impurities and other requirements:

1. Loss on drying: Not more than 12.0% under heating at 105℃ for 5 hours (General rule 5008).
2. Total ash: Not more than 8.0% (General rule 5004).
3. Acid-insoluble ash: Not more than 2.0% (General rule 5004).

Storage: Store in a ventilated and dry place.
Usage: Dampness-draining diuretic medicinal.
Dosage: 3~5 g.
Precaution and warning: Used with caution in pregnancy.

TOOSENDAN FRUCTUS
川楝子
Chuan Lian Zih / Chuan Lian Zi
Sichuan Chinaberry Fruit

Sichuan chinaberry fruit is the dried ripe fruit of *Melia toosendan* Sieb. et Zucc. (Fam. Meliaceae).
It contains not less than 17.0% of dilute ethanol-soluble extractives, not less than 25.0% of water extractives.

Description: Drupes subspheroidal or elliptic, 2~3.2 cm in diameter. Externally golden to brownish-yellow, slightly lustrous, rarely dented or shrunken, with

numerous yellowish-brown or blackish-brown dots. Apex remained with stylopodium, base dented with a fruit stalk scar. Exocarp coriaceous, usually forming a space with sarcocarp. Sarcocarp loose and soft, pale yellow, viscous when moistened. Kernels spheroidal or ovate, texture hard, both ends truncate, with 5~8 longitudinal ribs and 6~8 locules, each loculus containing a blackish-brown oblong seed. Seeds with fine protuberances, oily. Odor, characteristic; taste, sour and bitter.

Microscopic identification:

1. **Transverse section:**
   (1) Pericarp: Exocarp composed of 1 layer of subsquare cells covered with cuticle. Mesocarp mainly composed of parenchymatous cells, containing starch granules, clusters of calcium oxalate, approximately 16 μm in diameter, and round or oblong secretory cells, scattered with stone cells; fibers radially elongated near mesocarp, tangentially elongated on the inner side. Crystal-containing cells also exist, the walls thickened irregularly, usually several in groups, prisms of calcium oxalate existed in lumen.
   (2) Seed: Epidermis of testa composed of 1 layer of subsquare cells, with fine longitudinal striations, distributed granular protuberances visible on wall surface. Hypodermis composed of 1~2 layers of parenchymatous cells containing reddish-brown contents. Parenchymatous cells composed of 1 layer of subsquare or slightly oblong cells, with radially striations. Pigment layer composed of several layers of parenchymatous cells, containing brown contents. Endocarp mostly scattered with stone cells, occasionally with parenchymatous cells present, subrounded or oblong. Endosperm cells polygonal, filled with oil droplets and starch granules.
2. **Powder:** Yellowish-brown. Pericarp fibers and crystal fibers usually crisscrossed or arranged irregularly. Fibers vary in length, slightly curved and the endings obtusely rounded, 9~36 μm in diameter, walls thickened, pits indistinct, occasionally filled with yellowish-brown granular contents. Crystal-containing walls of crystal fibers vary in thickness, lignified, containing prisms of calcium oxalate, and clusters of calcium oxalate few. Stone cells of pericarp elongated or long-polygonal, with warty protrusions or short obtuse branches, S-shaped bending; some stone cells subrounded or subelliptical, 14~54 μm in diameter, up to 150 μm long, the wall 9~13 μm thick, pits few and short, lumens narrow, forming stellated shape in all short branches; also some stone cells slightly thickened, lumens filled with brown contents. Pit cells of pericarp subpolygonal or strip-shape, the wall slightly thickened and bending, containing round pits or oblique pits, several pits assemble into pits domain. Epidermal cells of testa bright yellow or yellowish-orange, flat in section view, the walls thickened, containing longitudinal pits; polygonal on surface view, with fine and dense granular striations. Crystal cells of endotesta with walls vary in thickness, lumens filled with pale yellow, yellowish-brown or reddish-brown contents, also containing small prisms of calcium oxalate. Epidermal cells of pericarp, pigment layers of testa, epidermal cells of endotesta and clusters of calcium oxalate also exist.

Thin layer chromatographic identification test (General rule 1010.3):

1. Sample solution: Add 1.0 g of powdered sample to 30 mL of ethyl acetate, ultrasonicate for 30 minutes and filter, evaporate the filtrate to dryness, and dissolve the residue in 1 mL of ethanol.
2. Reference drug solution: Use 1.0 g of the reference drug as the same method described above.
3. Procedure: Use silica gel F_{254} as the coating substance and a solution of toluene and acetone (9:1) as the developing solvent. Apply 5 μL of each of the above solutions to the plate. Once the top of the solvent rise to about 5~10 cm from the origin, dry in air. Spray with a 10% solution of phosphomolybdic acid in ethanol (Phosphomolybdic Acid/EtOH TS) and heat at 100 ℃. The spots in the chromatogram obtained from the sample solution correspond in R_f values and color to the spots in the chromatogram obtained from the reference drug solution.

Impurities and other requirements:

1. Loss on drying: Not more than 11.0% under heating at 105℃ for 5 hours (General rule 5008).
2. Total ash: Not more than 4.0% (General rule 5004).
3. Acid-insoluble ash: Not more than 1.0% (General rule 5004).

Assay:

1. Water extractives: Carry out the method for determination of water extractives (General rule 5006).
2. Dilute ethanol extractives: Carry out the method for determination of dilute ethanol-soluble extractives (General rule 5006).

Storage: Store in a ventilated and dry place, and protect from insects.
Usage: Qi-regulating medicinal.
Dosage: 4.5~9 g.

TRACHELOSPERMI CAULIS CUM FOLIUM
絡石藤
Luo Shih Teng / Luo Shi Teng
Chinese Starjasmine Lianoid Stem and Leaf

Chinese starjasmine lianoid stem and leaf is the dried lianoid stem with leaf of *Trachelospermum jasminoides* (Lindl.) Lem. (Fam. Apocynaceae).
It contains not less than 4.0% of dilute ethanol-soluble extractives and not less than 6.0% of water extractives.

Description: Stem cylindrical, curved, much-branched, varying in length, 0.2~0.7 cm in diameter; externally reddish-brown, with longitudinal wrinkles or small protuberances; nodes swollen, bearing with branchlets, occasionally with adventitious roots and opposite root scars; texture hard, fracture pale yellow, center hollowed. Leaves opposite, short petioled, elliptical or ovate-lanceolate, 1~8 cm in length, 0.7~3.5 cm in width, margin entire, apex obtuse or nearly acute, occasionally rolled; upper surface dark green, lower surface yellowish-green, with densely hairs; main vein 1, lateral veins obvious; texture coriaceous. Odor, slight; taste, slightly bitter.

Microscopic identification:

1. **Transverse section:**
   (1) Stem: The outermost layer was cork, composed of 3~6 rows of reddish-brown cork cells, occasionally cortex cells and epidermis remained outside the cork. Cortex narrow, stone cells presented at the outside, arranged in an interrupted ring, subrounded, lumen distinct, scattered with prisms of calcium oxalate. Phloem fibers in bundles, arranging in an interrupted ring, stone cells occasionally found. Cambium in a ring. Xylem composed of xylem fibers, vessels and rays, vessels mostly singly scattered. On the inner part of the xylem, cambium and internal phloem situated. Pith usually broken, cells subrounded, scattered with fiber bundles and prisms of calcium oxalate.
2. **Powder:** Greenish-gray. Epidermis covered with protuberance of adventitious roots or root scars. Cork cells reddish-brown, arranged neatly, subrectangular or suboblong. Cortex cells thin, subrectangular, about 10~40 μm in diameter, lumen distinct, scattered with prisms of calcium oxalate and stone cells. Xylem composed of xylem fibers, vessels and rays, xylem fibers about 30~105 μm in diameter. Vessels mainly bordered-pitted, about 10~75 μm in diameter, pitted and annular vessels are also found. Pith cells small, subrounded, scattered with fiber bundles and prisms of calcium oxalate.

Thin layer chromatographic identification test (General rule 1010.3):

1. Sample solution: Add 2.5 g of powdered sample to 10 mL of ethanol, ultrasonicate for 30 minutes, cool, filter and make up the filtrate to 10 mL.
2. Reference drug solution: Use 2.5 g of the reference drug as the same method described above.
3. Procedure: Use silica gel F_{254} as the coating substance and a solution of chloroform and methanol (4:1) as the developing solvent. Apply 10 μL of each of the above solutions to the plate. Once the top of the solvent rise to about 5~10 cm from the origin, dry in air. Examine under the ultraviolet light at 365 nm. The spots in the chromatogram obtained from the sample solution correspond in R_f values and color to the spots in the chromatogram obtained from the reference drug solution.

Impurities and other requirements:

1. Loss on drying: Not more than 8.0% under heating at 105℃ for 5 hours (General rule 5008).
2. Total ash: Not more than 13.0% (General rule 5004).
3. Acid-insoluble ash: Not more than 6.0% (General rule 5004).

Assay:

1. Water extractives: Carry out the method for determination of water extractives (General rule 5006).
2. Dilute ethanol extractives: Carry out the method for determination of dilute ethanol-soluble extractives (General rule 5006).

Storage: Store in a dry place.
Usage: Wind-dampness-dispelling medicinal.
Dosage: 6~12 g.

TRIBULI FRUCTUS
蒺藜
Ji Li / Ji Li
Tribulus Fruit

Tribulus fruit is the dried ripe fruit of *Tribulus terrestris* L. (Fam. Zygophyllaceae).
It contains not less than 8.0% of dilute ethanol-soluble extractives and not less than 8.0% of water extractives.

Description: Fruit consist of 5 mericarps, arranged radially, 0.7~0.12 cm in diameter, occasionally split into single mericarp. Mericarp hatchet-shaped, 0.3~0.6 cm in length; dorsal surface yellowish-green, protuberant, with longitudinal ribs and numerous spinlets; lateral surfaces both with a pair of long spines and short spines and reticular striations, with remained spine scars and reticular striations when spine removed. Texture hard. Odor, slight; taste, pungent and bitter.

Microscopic identification:

1. **Transverse section:** Exocarp composed of 1 row of cells. Mesocarp composed of parenchymatous

cells, scattered with small vascular bundles; conical fiber bundles located at the spine part, with group of stone cells at the base; several prisms of calcium oxalate located near the endocarp, forming crystal layer. Endocarp composed of fibers arranged criss-cross. Testa composed of 1 layer of arranged neatly cells, with walls thickened. Cotyledons with thin wall, containing oil droplets.

2. **Powder:** Yellowish-green or grayish-yellow. Fibers pale yellow, long strip-shaped, varying in length, arranged criss-cross or in bundles, 4~15 μm in diameter, about 35~95 μm in length. Stone cells singly scattered or in bundles, yellow, subovate, lone strip-shaped or irregular, about 4~15 μm in diameter; thick wall ones with lumens extremely narrow, thin wall ones with relatively dense pits. Vessels mainly spiral, reticulate occasionally found, 7~15 μm in diameter. Prisms of calcium oxalate numerous, 10~40 μm in diameter. Epidermal cells of testa mostly flaky, pale brown, subsquare or subpolygonal, 10~18 μm in diameter, walls thickened and lignified.

Thin layer chromatographic identification test (General rule 1010.3):

1. Sample solution: Add 2.0 g of powdered sample to 20 mL of methanol, heat under reflux for 30 minutes, filter, evaporate the filtrate to 10 mL.
2. Reference drug solution: Use 2.0 g of the reference drug as the same method described above.
3. Procedure: Use silica gel F_{254} as the coating substance and a solution of benzene and acetone (4:1) as the developing solvent. Apply 5 μL of each of the above solutions to the plate. Once the top of the solvent rise to about 5~10 cm from the origin, dry in air. Spray with a solution of *p*-anisaldehyde in sulfuric acid (*p*-Anisaldehyde/H_2SO_4 TS) and heat at 105℃ for 2 minutes until the spots become visible. Examine under the visible light. The spots in the chromatogram obtained from the sample solution correspond in R_f values and color to the spots in the chromatogram obtained from the reference drug solution.

Impurities and other requirements:

1. Loss on drying: Not more than 11.0% under heating at 105℃ for 5 hours (General rule 5008).
2. Total ash: Not more than 12.0% (General rule 5004).
3. Acid-insoluble ash: Not more than 4.0% (General rule 5004).

Assay:

1. Water extractives: Carry out the method for determination of water extractives (General rule 5006).
2. Dilute ethanol extractives: Carry out the method for determination of dilute ethanol-soluble extractives (General rule 5006).

Storage: Refrigerate or store in a cool and dry place, and protect from mold and insects.
Usage: Liver-pacifying and wind-extinguishing medicinal.
Dosage: 6~9 g.

TRICHOSANTHIS RADIX
栝樓根
Gua Lou Gen / Gua Lou Gen
Trichosanthes Root

Trichosanthes root is the dried root of *Trichosanthes kirilowii* Maxim. or *Trichosanthes rosthornii* Harms (Fam. Cucurbitaceae), commonly known as ”Tian Hua Fen”.
It contains not less than 6.0% of dilute ethanol-soluble extractives and not less than 15.0% of water extractives.

Description: Irregular cylindrical, longitudinal semi-cylindrical lobes or in pieces, 8~16 cm in length, 1.5~5.5 cm in diameter. Externally yellowish-white or pale brownish-yellow, with longitudinal wrinkles, rootlet scars and slightly concave transverse lenticel. Some remained with yellowish-brown outer bark. Texture compact, fracture white or pale yellow, starchy, wood yellow, slightly radially arranged in transversely cut section and striated in longitudinally cut section. Odorless; taste, slightly bitter.

Microscopic identification:

1. **Transverse section:** Inside cork showing a ring of stone cells arranged interruptedly. Phloem relatively narrow. Xylem extremely broad, vessels singly scattered or 3~10 in a group, near primary xylem vessels usually showing small pieces of inter xylary phloem. Parenchymatous cells filled with starch granules.
2. **Powder:** Off-white. Starch granules extremely numerous, simple granules subspheroid, semicircular or helmet-shaped, 6~48 μm in diameter, hilum dotted, shortly cleft or V-shaped, striations faintly visible; compound granules composed of 2~8 components. Bordered-pitted vessels huge, mostly broken, some bordered pits hexagonal or square, arranged densely. Stone cells yellowish-green, rectangular, elliptical, subsquare, polygonal or fusiform, 27~72 μm in diameter, with relatively thickened walls and densely fine pits. Xylem parenchymatous cells contain starch granules.

Thin layer chromatographic identification test (General rule 1010.3):

1. Sample solution: Add 1.0 g of powdered sample to 10 mL of methanol, shake for 5 minutes, stand, filter and use the filtrate.
2. Reference drug solution: Use 1.0 g of the reference drug as the same method described above.

3. Procedure: Use silica gel F_{254} as the coating substance and a solution of *n*-butanol, glacial acetic acid and water (4:1:1) as the developing solvent. Apply 5 μL of each of the above solutions to the plate. Once the top of the solvent rise to about 5~10 cm from the origin, dry in air. Spray with a solution of ninhydrin and heat at 105℃ for 5 minutes visible, examine under visible light. The spots in the chromatogram obtained from the sample solution correspond in R_f values and color to the spots in the chromatogram obtained from the reference drug solution.

Impurities and other requirements:
1. Loss on drying: Not more than 15.0% under heating at 105℃ for 5 hours (General rule 5008).
2. Total ash: Not more than 4.0% (General rule 5004).
3. Acid-insoluble ash: Not more than 1.0% (General rule 5004).
4. Total heavy metals: Not more than 10.0 ppm (General rule 3005).
5. Arsenic (As): Not more than 5.0 ppm (General rule 3006, 3049, 3050).

Assay:
1. Water extractives: Carry out the method for determination of water extractives (General rule 5006).
2. Dilute ethanol extractives: Carry out the method for determination of dilute ethanol-soluble extractives (General rule 5006).

Storage: Refrigerate or store in a cool and dry place, and protect from insects.
Usage: Heat-clearing medicinal (Heat-clearing and fire-purging medicinal).
Dosage: 10~15 g.

TRICHOSANTHIS SEMEN
栝樓仁
Gua Lou Ren / Gua Lou Ren
Trichosanthes Seed

Trichosanthes seed is the dried ripe seed of *Trichosanthes kirilowii* Maxim. or *Trichosanthes rosthornii* Harms (Fam. Cucurbitaceae).
It contains not less than 2.0% of dilute ethanol-soluble extractives and not less than 3.0% of water extractives.

Description:
1. Seed of *Trichosanthes kirilowii*: Ovate and elliptical, flattened, 11~15 mm in length, 6~7 mm in width, about 3.5 mm thick. Externally pale brown to brown, with fine dots and an indistinct circle of furrow along the edge. Apex relatively narrow, with a pale and slit-shaped hilum, base obtuse or slightly oblique. Testa hard; tegmen pale green, cotyledons 2, hypertrophy and oily. Odor, slight; taste, weak and oily.
2. Seed of *Trichosanthes rosthornii*: Relatively large and flattened, 1.5~1.9 cm in length, 0.8~1 cm in width, about 2.5 mm thick. Externally brown, with a distinct and wider rim circle of furrow. Apex relatively wider and truncate.

Microscopic identification:
1. **Transverse section:** Testa composed of 1 layer of epidermal cells, subrectangular, tangentially elongated, externally covered with cuticle. Sclerenchyma beneath the epidermis, composed of 6~14 layers of lignified cells, the cells of the 1~3 layers on the outside relatively small, long-rounded or subrounded, elongated tangentially; the cells of 3~6 layers from the outer to inner varied in size, arranged irregularly and densely, with relatively small lumen; the innermost 1~3 layers of stone cells subsquare or polygonal, with protuberantly thickened wall, arranged densely. Inside the stone cell layer, the lacunar parenchyma situated, composed of 1~3 layers of cells relatively small at the outside, elongated-rounded, subrounded or elliptical, those increased in size or dilapidated towards inner side, with gradually thickened wall, forming sclerenchyma near the joint of cotyledon in the two ends of seed. Vascular bundle located in the lacunar parenchyma of the two ends of the seed, with the vessels relatively small. Endosperm composed of several layers of flattened cells. Parenchyma of cotyledon occupied the most part of seed, filled with oil droplets and aleurone grains.
2. **Powder:** Dark reddish-brown. Epidermal cells of testa subpolygonal or irregular in surface view, periclinal walls with slightly curved or straight cuticle striations; cells vary in shape in sectional view, some elongated radially into palisade-shaped, some elongated tangentially covered with cuticle. Sclerenchymatous cells relatively large, brown, irregularly rectangular, elongated-rounded or subtriangular, walls sinuous, occasionally showing short-branched, 32~78 μm in diameter, up to 152 μm in length, wall 6~16 μm thick, occasionally vary in thickness, lignified, with reticulated clefts, pit canals relatively dense. Stone cells irregular in shape or elongated strip-shaped, walls sinuous or showing short-branched, 12~68 μm in diameter, up to 170 μm in length, wall 7~14 μm thick, a few with striations, pit canals relatively sparse, occasionally with indistinct pit canals at one side, some lumens contain yellowish-brown or brown contents. Cotyledon cells filled with aleurone grains, fatty oil droplets and fatty contents; endosperm cells filled with fine aleurone grains.

Thin layer chromatographic identification test (General rule 1010.3):
1. Sample solution: Add 1.0 g of powdered sample to 10 mL of petroleum ether (30~60℃), ultrasonicate for 10 minutes, filter and use the filtrate.

2. Reference drug solution: Use 1.0 g of the reference drug as the same method described above.
3. Reference standard solution: Weigh accurately a quantity of 3,29-dibenzoyl rarounitriol and dissolve in chloroform to produce a solution containing 0.12 mg per mL.
4. Procedure: Use silica gel F_{254} as the coating substance and a solution of cyclohexane and ethyl acetate (5:1) as the developing solvent. Apply 10 μL of each of the above solutions to the plate. Once the top of the solvent rise to about 5~10 cm from the origin, dry in air. Spray with a 10% solution of sulfuric acid in ethanol (H_2SO_4/EtOH TS) and heat at 105℃ until the spots become visible. Examine under the visible light. The spots in the chromatogram obtained from the sample solution correspond in R_f values and color to the spots in the chromatogram obtained with the reference drug solution and the reference standard solution.

Impurities and other requirements:
1. Loss on drying: Not more than 12.0% under heating at 105℃ for 5 hours (General rule 5008).
2. Total ash: Not more than 3.0% (General rule 5004).
3. Acid-insoluble ash: Not more than 2.0% (General rule 5004).

Assay:
1. Water extractives: Carry out the method for determination of water extractives (General rule 5006).
2. Dilute ethanol extractives: Carry out the method for determination of dilute ethanol-soluble extractives (General rule 5006).

Storage: Refrigerate or store in a cool and dry place, and protect from mold and insects.
Usage: Phlegm-dispelling medicinal (Heat-phlegm clearing and resolving medicinal).
Dosage: 9~30 g.

TRIONYCIS CARAPAX
鼈甲
Bie Jia / Bie Jia
Turtle Shell

Turtle shell is the dried shell of *Trionyx sinensis* Wiegmann or *Pelodiscus sinensis* Wiegmann (Fam. Trionychidae).

Description: Ellipsoidal or oval, dorsal surface convex, 10~15 cm in length, 9~14 cm in width. The outer surface blackish-brown or blackish-green, slightly lustrous, with fine reticular wrinkles and grayish-yellow or grayish-white spots, a longitudinal ridge in the middle, vertebral plates 7~8, 8 transverse concave strips arranged symmetrically on each side of the ridge. Serrated sutures observable when the outer skin peeled off. Inner surface whitish, protuberant vertebrae in the middle, the cervical vertebrae curved inward and alar, 8 ribs arranged on each side of the vertebrae, stretched out of the margin. Texture hard. Odor, slightly stinking; taste, weak.

Microscopic identification:
1. **Transverse section:** Fragments of carapace irregular in shape, varying in size, grayish-white or grayish-yellow, with longitudinal or crisscross fine-reticular striations and fine-dotted pores on the surface; bone lacunae irregular, long-prismatic or slender slit-shaped; bone canaliculus faintly visible.

Impurities and other requirements:
1. Loss on drying: Not more than 11.0% under heating at 105℃ for 5 hours (General rule 5008).
2. Acid-insoluble ash: Not more than 12.0% (General rule 5004).

Storage: Store in a ventilated and dry place, and protect from insects.
Usage: Deficiency-tonifying medicinal.
Dosage: 9~24 g, decocted earlier.

TRITICI LEVIS FRUCTUS
浮小麥
Fu Siao Mai / Fu Xiao Ma
Blighted Wheat

Blighted wheat is the light and shriveled fruit of the dried caryopsis of *Triticum aestivum* L. (Fam. Gramineae).
It contains not less than 5.0% of dilute ethanol-soluble extractives and not less than 5.0% of water extractives.

Description: Elliptical, both sides slightly acute, up to 6 mm in length, 1.5~2.5 mm in diameter. Externally pale yellowish-brown or yellow, slightly crumpled, the lateral side with a longitudinal deep furrow in the center, apex with yellowish-white pilose hairs. Texture hard, fracture white, starchy. Odor, slight; taste, weak. Caryopsis occasionally covered with glumes, lemma and palea, glumes coriaceous with a ridge, apex acute; lemma membranous, apex with an awn; palea chartaceous, apex without an awn. Odor, slight; taste, weak.

Transverse section: Pericarp fused with testa, the epidermal cells of the pericarp composed of 1 layer, with relatively thickened wall. Transverse cell 1 layer, oblong, arranged regularly, located inside the pericarp, with a relatively thickened wall. Aleurone layer located in the outermost side of endosperm, the cells square, filled with aleurone grains. Vascular tissue small, located deeply in the crease. The embryo composed of parenchymatous cells. The endosperm embraces the embryo, filled with starch granules.

Impurities and other requirements:
1. Loss on drying: Not more than 15.0% under heating at 105℃ for 5 hours (General rule 5008).
2. Total ash: Not more than 3.0% (General rule 5004).
3. Acid-insoluble ash: Not more than 3.0% (General rule 5004).

Assay:
1. Water extractives: Carry out the method for determination of water extractives (General rule 5006).
2. Dilute ethanol extractives: Carry out the method for determination of dilute ethanol-soluble extractives (General rule 5006).

Storage: Store in a dry place, and protect from insects.
Usage: Astringent medicinal.
Dosage: 15~30 g.

TROGOPTERORI FAECES
五靈脂
Wu Ling Jhih / Wu Ling Zhi
Trogopterus Dung

Trogopterus dung is the dung of *Trogopterus xanthipes* Milne-Edwards (Fam. Petauristidae).
It contains not less than 3.0% of dilute ethanol-soluble extractives and not less than 3.0% of water extractives.

Description:
According to the different shapes, separate into "Ling Zhi Kuai" and "Ling Zhi Mi":
1. Ling Zhi Kuai (Tong Ling Zhi): Aggregated to irregular masses by numerous fecal pellets, blackish-brown, yellowish-brown, reddish-brown or grayish-brown, lumpy, containing oily luster. The adherent fecal pellets oblong, commonly broken on the surface, fibrous. Texture light and hard. Fracture uneven. The shape of fecal pellets faintly visible, some containing yellowish-brown resinous contents. Odor, stinking and foul, containing oily aromatic of pinophyta seed; taste, slightly bitter.
2. Ling Zhi Mi: Fecal pellets long-cylindrical, both ends obtusely round, 0.5~1.5 cm in length, 3~6 mm in diameter; the surface relatively smooth or slightly rough, brown or blackish-brown, commonly with pale spots, some with slightly lustrous. Texture light and loose, easily broken. Fracture yellowish-green or blackish-brown, fibrous. Odor, slight; taste, slightly bitter and salty.

Microscopic identification:
1. **Powder:** Yellowish-brown. Drop in 50% sulfuric acid, standing for more than 10 minutes, numerous small granular crystals are produced from masses (fecal pellets), with formation of clustered needle-like or rectangular-flaky crystals. Commonly with tracheid, fibers, epidermis, pollen grains and some plant tissue.

Impurities and other requirements:
1. Loss on drying: Not more than 13.0% under heating at 105℃ for 5 hours (General rule 5008).
2. Total ash: Not more than 36.0% (General rule 5004).
3. Acid-insoluble ash: Not more than 26.0% (General rule 5004).

Assay:
1. Water extractives: Carry out the method for determination of water extractives (General rule 5006).
2. Dilute ethanol extractives: Carry out the method for determination of dilute ethanol-soluble extractives (General rule 5006).

Storage: Refrigerate or store in a cool and dry place, and protect from moisture.
Usage: Blood-regulating medicinal (Blood-activating and stasis-dispelling medicinal).
Dosage: 4.5~9 g, wrap-boiled.
Precaution and warning: Used with caution in pregnancy and incompatible with Ginseng Radix.

TSAOKO FRUCTUS
草果
Cao Guo / Cao Guo
Tsaoko Amomum Fruit

Tsaoko amomum fruit is the dried ripe fruit of *Amomum tsaoko* Crevost et Lemaire (Fam. Zingiberaceae).
It contains not less than 8.0% of dilute ethanol-soluble extractives and not less than 8.0% of water extractives. Masses of seeds contain not less than 1.4% (v/w) of volatile oil.

Description: Oblong, with 3 obtuse ribs, 2~4 cm in length, 1~2.5 cm in diameter. Externally grayish-brown, with distinct longitudinal furrows and ribs, apex with a rounded and protuberant stylopodium, base with a short fruit stalk or its scar. Pericarp thick and tenacious, the central part showing brown septa dividing the masses of seeds into 3 groups, each containing mostly 8~11 seeds. Seed irregular polyhedral, 3~5 mm in diameter, externally reddish-brown, covered with grayish-white membranous aril, oily. Odor, slight; taste, slightly pungent and bitter.

Microscopic identification:
1. **Transverse section:** Exocarp composed of 1 row of square cells, covered with cuticle. Mesocarp broad, cells containing clusters or prisms of calcium oxalate and oil cells, scattered with collateral vascular bundles, with fiber bundles on the outer side. Endocarp composed of 1 row of parenchymatous cells. Aril composed of several

rows of cells. Epidermis of testa composed of 1 row of suboblong cells, 35~40 μm in length, 20~30 μm in width, wall thick and covered with cuticle; inside showing parenchymatous cells, containing yellowish-brown contents. Oil cells 1~2 rows, square, elongated radially, 40~80 μm in length, 35~60 μm in width. Endotesta composed of 1 row of sclerenchymatous cells, arranged in palisade-shaped, reddish-brown. Perisperm cells polygonal or subrounded, containing clusters or prisms of calcium oxalate and abundant starch granules. Endosperm cells contain aleurone grains and starch granules.

Thin layer chromatographic identification test (General rule 1010.3):

1. Sample solution: Distill a quantity of powdered sample with water, the volatile oil is produced. Take 0.5 mL of volatile oil and add ethanol to 10 mL.
2. Reference drug solution: Use a reference drug as the same method described above.
3. Reference standard solution: Weigh accurately a quantity of 1,8-cineole and dissolve in ethanol to produce a solution containing 20.0 μL per mL.
4. Procedure: Use silica gel F_{254} as the coating substance and a solution of *n*-hexane and ethyl acetate (17:3) as the developing solvent. Apply 1 μL of each of the above solutions to the plate. Once the top of the solvent rise to about 5~10 cm from the origin, dry in air. Spray with a 5% solution of vanillin in sulfuric acid (Vanillin/H_2SO_4 TS), heat at 105℃ for 2 minutes, examine under visible light. The spots in the chromatogram obtained from the sample solution correspond in R_f values and color to the spots in the chromatogram obtained from the reference drug solution and the reference standard solution.

Impurities and other requirements:

1. Loss on drying: Not more than 14.0% under heating at 105℃ for 5 hours (General rule 5008).
2. Total ash: Not more than 10.0% (General rule 5004).
3. Acid-insoluble ash: Not more than 3.0% (General rule 5004).

Assay:

1. Water extractives: Carry out the method for determination of water extractives (General rule 5006).
2. Dilute ethanol extractives: Carry out the method for determination of dilute ethanol-soluble extractives (General rule 5006).
3. Volatile oil: Carry out the method for determination of volatile oil (General rule 5007).

Storage: Store in a cool and dry place, and protect from moisture.
Usage: Dampness-dispelling with aroma medicinal.
Dosage: 3~6 g.

TYPHAE POLLEN
蒲黃
Pu Huang / Pu Huang
Cattail Pollen

Cattail pollen is the dried pollen of *Typha angustifolia* L. or *Typha orientalis* Presl and similar species (Fam. Typhaceae).
It contains not less than 9.0% of dilute ethanol-soluble extractives and not less than 11.0% of water extractives.

Description: Yellow and fine powder. Texture light, with satiny feeling and easily adsorbed on fingers, capable of floating on water. Odorless; taste, weak.

Microscopic identification:

1. **Powder:** Yellow. Starch granules solitary, subrounded or oblong, 17~29 μm in diameter, with reticulate glyph on the surface, containing indistinct single pits.

Thin layer chromatographic identification test (General rule 1010.3):

1. Sample solution: Add 1.0 g of powdered sample to 30 mL of methanol, ultrasonicate for 30 minutes, cool, filter, and make up the filtrate to 10 mL.
2. Reference drug solution: Use 1.0 g of the reference drug as the same method described above.
3. Procedure: Use silica gel F_{254} as the coating substance and a solution of toluene, ethyl acetate and formic acid (5:2:1) as the developing solvent. Apply 10 μL of each of the above solutions to the plate. Once the top of the solvent rise to about 5~10 cm from the origin, dry in air. Examine under the ultraviolet light at 254 nm. The spots in the chromatogram obtained from the sample solution correspond in R_f values and color to the spots in the chromatogram obtained from the reference drug solution.

Impurities and other requirements:

1. Loss on drying: Not more than 13.0% under heating at 105℃ for 5 hours (General rule 5008).
2. Total ash: Not more than 10.0% (General rule 5004).
3. Acid-insoluble ash: Not more than 4.0% (General rule 5004).

Assay:

1. Water extractives: Carry out the method for determination of water extractives (General rule 5006).
2. Dilute ethanol extractives: Carry out the method for determination of dilute ethanol-soluble extractives (General rule 5006).

Storage: Store in a ventilated and dry place, and protect from moisture and insects.
Usage: Hemostatic medicinal.
Dosage: 5~9 g.
Precaution and warning: Used with caution in pregnancy.

UNCARIAE RAMULUS CUM UNCIS
鉤藤
Gou Teng / Gou Teng
Uncaria Stem with Hooks

Uncaria stem with hooks is the dried stem with hooks of *Uncaria rhynchophylla* (Miq.) Jacks., *Uncaria macrophylla* Wall., *Uncaria hirsuta* Havil., *Uncaria sinensis* (Oliv.) Havil. or *Uncaria sessilifructus* Roxb. (Fam. Rubiaceae).
It contains not less than 8.0% of dilute ethanol-soluble extractives and not less than 8.0% of water extractives.

Description: Stem cylindrical or subsquare, 2~3 cm in length, 2~5 mm in diameter. Externally reddish-brown to purplish-red, with fine longitudinal striations and glabrous. Most nodes bearing with two opposite downward curved hooks, some ones with a hook at one side and a protuberant scar at another side; hooks slightly flattened or rounded, base relatively broad, apex acute; dotted scars of falling petiole and ring-shaped scars of stipule visible on the branch connected with the hook base. Texture light and tenacious, fracture yellowish-brown, bark fibrous, pith yellowish-white, lax as sponge or hollowed. Odorless; taste, weak.

Microscopic identification:

1. **Transverse section:**
   (1) Branch: Epidermis covered with thickened cuticle. Cortex contains brown contents and a few of starch granules. Pericyclic fiber bundles linked into an interrupted ring. Phloem fibers of 2 types: one type is sclerenchyma, the other type is parenchyma, usually singly scattered or 2~3 in bundles. Phloem parenchymatous cells contain sandy crystals of calcium oxalate. Phloem rays 1 layer wide. Cambium distinct. Xylem vessels subrounded, mostly singly scattered, occasionally 2~4 parallelly arranged; xylem fibers with thin wall, uneasily distinguished with xylem parenchymatous cells. Pith broad, occupied about half portion of sectional diameter, surrounded by 1~2 layers of sclerenchymatous cells, with distinct single pits, containing brown contents.
   (2) Hook: The basic characters same as branch, but the tissue arranged densely, xylem relatively broad at the hook apex, pith narrow.
2. **Powder:** Pale reddish-brown. Phloem fibers mostly in bundles, 16~42 μm in diameter, unlignified to slightly lignified, pit canals indistinct. Vessels spiral, reticulate, scalariform and bordered-pitted, bordered-pitted vessels up to 68 μm in diameter. Phloem parenchymatous cells contain sandy crystals of calcium oxalate. Slightly lignified parenchyma fragments abundant (including xylem rays, pith and xylem parenchymatous cells), cells subsquare, subrounded, irregular or fine-rectangular. 17~72 μm in diameter, walls slightly thickened, with numerous oblong or round single pits. Epidermal cells brownish-yellow, subsquare, polygonal or slightly elongated, up to 32 μm in diameter, walls slightly thickened, cells containing oil droplets, relatively thickened cuticle layer are found in sectional view. Fiber-shaped tracheids rare, mostly in bundles with phloem fibers.

Thin layer chromatographic identification test (General rule 1010.3):

1. Isorhynchophylline:
   (1) Sample solution: Add 2.0 g of powdered sample to 2 mL of concentrated ammonia solution, macerate for 30 minutes, add 50 mL of chloroform, heat under reflux for 2 hours, cool, filter and evaporate the filtrate to dryness, dissolve the residue in 1 mL methanol.
   (2) Reference drug solution: Use 2.0 g of the reference drug as the same method described above.
   (3) Reference standard solution: Weigh accurately a quantity of isorhynchophylline and dissolve in methanol to produce a solution containing 0.5 mg per mL.
   (4) Procedure: Use silica gel F_{254} as the coating substance and a solution of petroleum ether (30~60 ℃) and acetone (6:4) as the developing solvent. Apply 10~20 μL of each of the sample solution and reference drug solution and 5 μL of the reference standard solution to the plate. Once the top of the solvent rise to about 5~10 cm from the origin, dry in air. Spray with a modified solution of Dragendorff's spray reagent. The spots in the chromatogram obtained from the sample solution correspond in R_f values and color to the spots in the chromatogram obtained with the reference drug solution and the reference standard solution.
2. Reference drug:
   (1) Sample solution: Add 1.0 g of powdered sample to 15 mL of methanol, ultrasonicate for 30 minutes, filter and use the filtrate.
   (2) Reference drug solution: Use 1.0 g of the reference drug as the same method described above.
   (3) Procedure: Use silica gel F_{254} as the coating substance and a solution of *n*-butanol, glacial acetic acid and water (7:1:2) as the

developing solvent. Apply 10 μL of each of the above solutions to the plate. Once the top of the solvent rise to about 5~10 cm from the origin, dry in air. Spray with a solution of vanillin in a solution of sulfuric acid and methanol (Vanillin/H_2SO_4 MeOH TS) and heat at 105℃until the spots become visible. The spots in the chromatogram obtained from the sample solution correspond in R_f values and color to the spots in the chromatogram obtained from the reference drug solution.

Impurities and other requirements:

1. Loss on drying: Not more than 10.0% under heating at 105℃ for 5 hours (General rule 5008).
2. Total ash: Not more than 3.0% (General rule 5004).
3. Acid-insoluble ash: Not more than 2.0% (General rule 5004).

Assay:

1. Water extractives: Carry out the method for determination of water extractives (General rule 5006).
2. Dilute ethanol extractives: Carry out the method for determination of dilute ethanol-soluble extractives (General rule 5006).

Storage: Store in a ventilated and dry place, and protect from moisture.
Usage: Liver-pacifying and wind-extinguishing medicinal.
Dosage: 3~12 g.

VACCARIAE SEMEN
王不留行
Wang Bu Liou Sing / Wang Bu Liu Xing
Cowherb Seed

Cowherb seed is the dried ripe seed of *Vaccaria segetalis* (Neck.) Garcke (Fam. Caryophyllaceae).
It contains not less than 6.0% of dilute ethanol-soluble extractives and not less than 8.0% of water extractives.

Description: Spheroidal, 1.5~2 mm in diameter. Externally black, slightly lustrous, with dense fine and granular protuberances under the magnifier, with pale dot-like hilum and a concave furrow. Texture hard, fracture grayish-white, horny. Odor, slight; taste, weak.

Microscopic identification:

1. **Transverse section**: Embryo bended, the major portion of embryo is occupied by endosperm. Epidermal cells of testa brownish-black, undulating bend. Inner epidermis of testa reddish-brown. Endosperm cells polygonal or sub-elliptical, lumen contains starch granules.
2. **Powder:** Grayish-brown. Fragments of testa reddish-brown, lumen distinct, sub-elliptical in shape, with striations. Endosperm cells relatively large, polygonal or sub-elliptical, lumen walls relatively thin, containing starch granules and aleurone granules.

Thin layer chromatographic identification test (General rule 1010.3):

1. Reference drug:
   (1) Sample solution: Add 1.5 g of powdered sample to 20 mL of methanol, heat and reflux for 30 minutes, cool and filter, evaporate the filtrate to dryness, dissolve the residue in 2 mL of methanol.
   (2) Reference drug solution: Use 1.5 g of the reference drug as the same method described above.
   (3) Procedure: Use silica gel F_{254} as the coating substance and the lower layer of a solution of chloroform, methanol and water (15:7:2) as the developing solvent. Apply 10 μL of each of the above solutions to the plate. Once the top of the solvent rise to about 5~10 cm from the origin, dry in air. Spray with modified Dragendorff's reagent. The spots in the chromatogram obtained from the sample solution correspond in R_f values and color to the spots in the chromatogram obtained from the reference drug solution.
2. Vaccarin:
   (1) Sample solution: Add 1.0 g of powdered sample to 40 mL of 70% methanol, ultrasonicate for 30 minutes, cool and filter and use the filtrate.
   (2) Reference drug solution: Use 1.0 g of the reference drug as the same method described above.
   (3) Reference standard solution: Weigh accurately a quantity of vaccarin and dissolve in methanol to produce a solution containing 0.1 mg per mL.
   (4) Procedure: Use polyamide as the coating substance and a solution of methanol and water (4:6) as the developing solvent. Apply 2 μL of each of the above solutions to the plate. Once the top of the solvent rise to about 5~10 cm from the origin, dry in air. Spray with a 2% solution of aluminum chloride in ethanol ($AlCl_3$/EtOH TS), and dry with hot air. Examine under ultraviolet light at 365 nm. The spots in the chromatogram obtained from the sample solution correspond in R_f values and color to the spots in the chromatogram obtained from the reference drug solution and the reference standard solution.

Impurities and other requirements:

1. Loss on drying: Not more than 13.0% under heating at 105℃ for 5 hours (General rule 5008).
2. Total ash: Not more than 4.0% (General rule 5004).
3. Acid-insoluble ash: Not more than 1.0% (General rule 5004).

Assay:

1. Water extractives: Carry out the method for determination of water extractives (General rule 5006).
2. Dilute ethanol extractives: Carry out the method for determination of dilute ethanol-soluble extractives (General rule 5006).

Storage: Refrigerate or store in a cool and dry place, and protect from insects.
Usage: Blood-regulating medicinal (Blood-activating and stasis-dispelling medicinal).
Dosage: 4.5~9 g.
Precaution and warning: Used with caution in pregnancy.

VIGNAE SEMEN
赤小豆
Chih Siao Dou / Chi Xiao Dou
Rice Bean

Rice bean is the dried ripe seed of *Vigna calcaratus* Roxb. or *Vigna angularis* Ohwi et Ohashi (Fam. Leguminosae).
It contains not less than 8.0% of dilute ethanol-soluble extractives and not less than 10.0% of water extractives.

Description: Cylindrical and slightly flattened, both ends slightly truncate or obtusely rounded, 5~8 mm in length, 2~4 mm in diameter. Externally purplish-red or dark reddish-brown, occasionally brownish-yellow, smooth, slightly lustrous or dull. Hilum white, slightly protuberant at one side, dented and forming a longitudinal furrow in the middle, 2~4 mm in length, with an indistinct ridge at the other side. Texture hard, uneasily broken, cotyledons 2, milky-white, thick, radicle slender, curved. Odor, slight; taste, slightly sweet, bean-like on chewing.

Microscopic identification:

1. **Transverse section:** Epidermal cells of testa composed of 1 layer of palisade cells and 2 layers at hilum, 37~75 μm in radial direction, 7~12 μm in tangential direction, lumina contain pale reddish-brown contents, near the upper part with a light line; brace cells 1 row, dumbbell-shaped, 13~17 μm in radial direction, 10~20 μm in tangential direction, constrict parts 7~12 μm in tangential direction; underneath ranged about 10 layers of parenchymatous cells. Cotyledon cells contain starch granules, fine prisms of calcium oxalate, 3~13 μm in diameter, and clusters of calcium oxalate, 6~16 μm in diameter. A caruncle occurring at outside the palisade cells in hilum, cells containing starch granules; inner with tracheid, cells walls reticulate thickened, with asteroidal cells in both sides, with intercellular spaces.

Thin layer chromatographic identification test (General rule 1010.3):

1. Sample solution: Add 1.0 g of powdered sample to 10 mL of methanol, ultrasonicate for 30 minutes, filter then evaporate the filtrate to dryness, dissolve the residue in 1 mL of methanol.
2. Reference drug solution: Use 1.0 g of the reference drug as the same method described above.
3. Procedure: Use silica gel F_{254} as the coating substance and a solution of *n*-propanol and water (7:3) as the developing solvent. Apply 10 μL of each of the above solutions to the plate. Once the top of the solvent rise to about 5~10 cm from the origin, dry in air. Spray with a 1% solution of ninhydrin in ethanol (Ninhydrin/EtOH TS) and heat at 105℃ until the spots become visible. The spots in the chromatogram obtained from the sample solution correspond in R_f values and color to the spots in the chromatogram obtained from the reference drug solution.

Impurities and other requirements:

1. Loss on drying: Not more than 14.0% under heating at 105℃ for 5 hours (General rule 5008).
2. Total ash: Not more than 8.0% (General rule 5004).
3. Acid-insoluble ash: Not more than 1.0% (General rule 5004).

Assay:

1. Water extractives: Carry out the method for determination of water extractives (General rule 5006).
2. Dilute ethanol extractives: Carry out the method for determination of dilute ethanol-soluble extractives (General rule 5006).

Storage: Refrigerate or store in a cool and dry place, and protect from insects.
Usage: Dampness-draining diuretic medicinal.
Dosage: 10~30 g.

VIOLAE HERBA
紫花地丁
Zih Hua Di Ding / Zi Hua Di Ding
Philippine Violet Herb

Philippine violet herb is the dried herb of *Viola yedoensis* Makino (Fam. Violaceae).
It contains not less than 9.0% of dilute ethanol-soluble extractives and not less than 10.0% of water extractives.

Description: Frequently crumpled into masses. The main roots long-conical, pale yellowish-brown, 0.1~0.3 cm in diameter, with fine longitudinal wrinkles; texture hard, easily broken, fracture even, starchy. Leaves grayish-green, lanceolate or ovate-lanceolate as whole, 1.5~6 cm in length, 1~2 cm in width; apex obtuse, base truncate or slightly cordate, margin obtusely serrate, both surfaces pubescent; petioles with distinct narrow wings. Pedicels slender; corolla pale purple, petal 5, spur tubular. Capsules elliptical or 3-split; seeds numerous. Odor, slight; taste, slightly bitter and sticky.

Microscopic identification:

1. **Transverse section:**
   (1) Root: The outermost layer was 4~6 layers of cork cells, cell wall slightly lignified; cortex broad, parenchymatous cells subrounded. Phloem scattered with sieve tube groups, rays indistinct. Cambium in a ring, cells flat. Xylem composed of vessels, fiber tracheids, xylem fibers and xylem parenchymatous cells; vessels scattered or 2~4 arranged in groups, polygonal or subrounded, walls lignified; xylem fibers well developed, arranging around vessels. Parenchymatous cells filled with starch granules and clusters of calcium oxalate; starch granules mostly simple, subspheroidal, 2~8 μm in diameter; clusters of calcium oxalate 20~30 μm in diameter.
   (2) Leaf: In surface view, upper epidermis with anticlinal walls slightly straight, moniliform thickened, with distinct cutinized striations on the surface, stomata relatively few, anisocytic; lower epidermis with anticlinal walls slightly curved, indistinct thickness, with cutinized striations on the surface. Both upper and lower epidermis contain unicellular non-glandular hairs of 2 types: one type is slightly short, conical, wall thick with distinct warty protuberance, 50~85 μm in length, 20~30 μm in diameter; the other type is long, slightly curved, walls with short linear striations, 160~360 μm in length, 20~30 μm in diameter. Mesophyll contains clusters of calcium oxalate, 15~40 μm in diameter.
2. **Powder:** Yellowish-brown. Containing clusters of calcium oxalate. Parenchymatous cells contain starch granules. Vessels mainly scalariform and reticulate.

Thin layer chromatographic identification test (General rule 1010.3):

1. Sample solution: Add 1.0 g of powdered sample to 10 mL of methanol, ultrasonicate for 30 minutes, cool and filter and make up the filtrate to 10 mL.
2. Reference drug solution: Use 1.0 g of the reference drug as the same method described above.
3. Procedure: Use silica gel F_{254} as the coating substance and a solution of toluene and ethyl acetate (1:1) as the developing solvent. Apply 10 μL of each of the above solutions to the plate. Once the top of the solvent rise to about 5~10 cm from the origin, dry in air. Examine under the ultraviolet light at 365 nm. The spots in the chromatogram obtained from the sample solution correspond in R_f values and color to the spots in the chromatogram obtained from the reference drug solution.

Impurities and other requirements:

1. Loss on drying: Not more than 12.0% under heating at 105℃ for 5 hours (General rule 5008).
2. Total ash: Not more than 25.0% (General rule 5004).
3. Acid-insoluble ash: Not more than 11.0% (General rule 5004).

Assay:

1. Water extractives: Carry out the method for determination of water extractives (General rule 5006).
2. Dilute ethanol extractives: Carry out the method for determination of dilute ethanol-soluble extractives (General rule 5006).

Storage: Store in a ventilated and dry place.
Usage: Heat-clearing medicinal.
Dosage: 15~30 g, mashed and used an appropriate amount of fresh one for external use.

VISCI HERBA
槲寄生
Hu Ji Sheng / Hu Ji Sheng
Colored Mistletoe Herb

Colored mistletoe herb is the dried stem and branch with leaf of *Viscum coloratum* (Komar.) Nakai (Fam. Loranthaceae).
It contains not less than 0.04% of syringoside.

Description: Stems cylindrical, 2~5 branched in fork shape, about 30 cm in length, 0.3~1 cm in diameter; externally yellowish-green, golden-yellow or yellowish-brown, with longitudinal wrinkles; nodes swollen, with branches or scars of branches; texture light and fragile, easily broken; fracture uneven, bark yellow, wood pale yellow, pith rays radial, pith often inclined to one side. Leaves opposite on the tips of branches, easily fallen off, sessile; lamina oblong-lanceolate, 2~7 cm in length, 0.5~1.5 cm in width; apex obtusely rounded, base cuneate, margin entire; externally yellowish-green, with fine wrinkles, quinque-veined, the middle 3 distinct; texture coriaceous. Odorless; taste, slightly bitter, sticky on chewing.

Microscopic identification:

1. **Transverse section:**
   (1) Stem: Epidermal cells rectangular, covered with yellowish-green cuticle, 19~80 μm thick. Cortex relatively broad, fibers arranged in bundles of several dozens of cells, slightly lignified; stone cells extremely numerous in old stem, singly scattered or in bundles. Phloem relatively narrow, scattered with stone cells in old stem; cambium indistinct. Xylem rays scattered with fiber bundles; vessels surrounded by numerous fibers. Pith distinct. Parenchymatous cells contain clusters of calcium oxalate and a few of prism crystals.
2. **Powder:** Pale yellow. Fragments of epidermis yellowish-green, cells subsquare with stomata. Fibers in bundles, 10~34 μm in diameter, wall relatively thickened, slightly sinuous and lignified. Clusters of calcium oxalate 17~45 μm in diameter; prism crystals relatively few, 8~30 μm in diameter. Stone cells subsquare, subpolygonal or irregular, 42~102 μm in diameter.

Thin layer chromatographic identification test (General rule 1010.3):

1. Sample solution: Add 1.5 g of powdered sample to 30 mL of ethanol, heat under reflux for 30 minutes, filter, evaporate the filtrate to dryness, and dissolve the residue in 1 mL of absolute ethanol.
2. Reference drug solution: Use 1.5 g of the reference drug as the same method described above.
3. Reference standard solution: Weigh accurately a quantity of oleanolic acid and dissolve in absolute ethanol to produce a solution containing 1.0 mg per mL.
4. Procedure: Use silica gel F_{254} as the coating substance and a solution of cyclohexane, ethyl acetate and glacial acetic acid (20:6:1) as the developing solvent. Apply 4 μL of each of the sample solution and reference drug solution and 2 μL of the reference standard solution to the plate. Once the top of the solvent rise to about 5~10 cm from the origin, dry in air. Spray with a 10% solution of sulfuric acid in ethanol (H_2SO_4/EtOH TS) and heat at 80℃ until the spots become visible. Examine under the visible light and ultraviolet light at 365 nm. The spots in the chromatogram obtained from the sample solution correspond in R_f values and color to the spots in the chromatogram obtained from the reference drug solution and the reference standard solution.

Assay:

1. Syringoside:
   (1) Mobile phase: A solution of methanol and 0.1% phosphoric acid (15:85). The ratio varies as required.
   (2) Reference standard solution: Weigh accurately a quantity of syringoside and dissolve in methanol to produce a solution containing 50 μg per mL.
   (3) Sample solution: Weigh accurately 2.0 g of the powdered sample, transfer to a conical flask with stopper, accurately add 25 mL of 70% methanol, stopper tightly and weigh, ultrasonicate for 30 minutes, cool, weigh again, replenish the loss of the weight with 70% methanol, mix well, filter and use the filtrate.
   (4) Chromatographic system: The liquid chromatography is equipped with an ultraviolet absorption photometer (wavelength: 264 nm) and a column packed with octadecylsilanized silica gel. The number of theoretical plates of the peak of syringoside should not be less than 5,000.
   (5) Procedure: Inject accurately 10 μL of each of the reference standard solution and the sample solution into the liquid chromatography apparatus, and calculate the content.

Storage: Store in a cool and dry place, and protect from insects.
Usage: Wind-dampness-dispelling medicinal.
Dosage: 9~15 g.

VITICIS SIMPLICIFOLIAE FRUCTUS
蔓荊子
Man Jing Zih / Man Jing Zi
Simpleleaf Shrub Chastetree Fruit

Simpleleaf shrub chastetree fruit is the dried ripe fruit of *Vitex trifolia* L. var. *simplicifolia* Cham. or *Vitex trifolia* L. (Fam. Verbenaceae).
It contains not less than 4.0% of dilute ethanol-soluble extractives, not less than 4.0% of water extractives and not less than 0.03% of vitexicarpin.

Description: Spheroidal, 4~6 mm in diameter. Externally grayish-black or blackish-brown, covered with grayish-white frost-like hairs, bearing with 4 longitudinal shallow furrows. Apex slightly concave, base with grayish-white persistent calyx and short fruit stalk. Persistent calyx 1/3~2/3 length of the fruit, apex 5-toothed, with 1~2 deep lobes, grayish-white, covered with dense pubescences. Texture hard, uneasily broken. In transverse section, pericarp thick, pale grayish-yellow; Exocarp with brown oil spots (oil cavity); endocarp showing 4 locules (4 nutlets), each locule containing 1 seed. Kernel containing abundant fatty oil. Odor, aromatic; taste, weak and slightly pungent.

Microscopic identification:

1. **Transverse section:**
   (1) Pericarp: Exocarp composed of 1 layer of subsquare epidermal cells, covered with cuticle, with glandular hairs and

non-glandular hairs. Mesocarp broad, occupied the most portion of the pericarp, the outer part of 2~3 rows of cells contain pigments, the remaining with cell walls slightly thickened and lignified; vascular bundles small. Endocarp composed of several layers of stone cells, wall thickened, pit canals distinct.

2. **Powder:** Dark grayish-brown. Stone cells of endocarp subsquare, subrounded, subpolygonal, fusiform or long strip-shaped, 9~65 μm in diameter, up to 171 μm in length, walls 5~22 μm thick, striations mostly distinct, pit canals relatively dense, lumen narrow, mostly containing 1 to several fine prisms of calcium oxalate. Parenchymatous cells of pericarp subrounded, subpolygonal, subrectangular or suboblong, 19~70 μm in diameter, walls slightly thickened, occasionally moniliform lignified, some lumens contain yellowish-brown contents. Epidermal cells of exocarp rectangular in sectional view, covered with cuticle, the margins denticulate-shaped; subpolygonal in surface view, with dense cutinized striations, hairs or round hair scars visible. Non-glandular hairs 1- to 5-celled, straight, a few curved or down-prostrate, complete ones 36~191 μm in length, 9~23 μm in diameter, wall slightly thickened with warty protuberance, the apical cells relatively dense, the basal cells slightly shrunken. Glandular scales with head 4-celled, 36~63 μm in diameter, the stalk extremely short, unicellular. A few of small glandular hairs visible, the head 1- to 4-celled; the stalk 1- to 3-celled. Reticular epidermal cells of testa with periclinal walls reticular thickened, slightly lignified, pits strip-shaped, arranged in order.

Thin layer chromatographic identification test (General rule 1010.3):

1. Sample solution: Add 1.0 g of powdered sample to 15 mL of methanol, ultrasonicate for 30 minutes, filter and use the filtrate.
2. Reference drug solution: Use 1.0 g of the reference drug as the same method described above.
3. Reference standard solution: Weigh accurately a quantity of vitexicarpin and dissolve in methanol to produce a solution containing 1.0 mg per mL.
4. Procedure: Use silica gel F_{254} as the coating substance and a solution of *n*-butanol, 4 N ammonia water and ethanol (5:2:1) as the developing solvent. Apply 10 μL of each of the above solutions to the plate. Once the top of the solvent rise to about 5~10 cm from the origin, dry in air. Examine under the ultraviolet light at 254 nm. The spots in the chromatogram obtained from the sample solution correspond in R_f values and color to the spots in the chromatogram obtained from the reference drug solution and the reference standard solution.

Impurities and other requirements:

1. Loss on drying: Not more than 15.0% under heating at 105℃ for 5 hours (General rule 5008).
2. Total ash: Not more than 9.0% (General rule 5004).
3. Acid-insoluble ash: Not more than 3.5% (General rule 5004).

Assay:

1. Vitexicarpin:
   (1) Mobile phase: A solution of methanol and 0.4% phosphoric acid (60:40). The ratio varies as required.
   (2) Reference standard solution: Weigh accurately a quantity of vitexicarpin and dissolve in methanol to produce a solution containing 30 μg per mL.
   (3) Sample solution: Weigh accurately 2 g of the powdered sample, transfer to a conical flask with stopper, accurately add 50 mL of methanol, weigh, heat under reflux for 1 hour, cool, weigh again, replenish the loss of the weight with methanol, mix well, filter and use the filtrate.
   (4) Chromatographic system: The liquid chromatography is equipped with an ultraviolet absorption photometer (wavelength: 258 nm) and a column packed with octadecylsilanized silica gel. The number of theoretical plates of the peak of vitexicarpin should not be less than 2,000.
   (5) Procedure: Inject accurately 10 μL of each of the reference standard solution and the sample solution into the liquid chromatography apparatus, and calculate the content.
2. Water extractives: Carry out the method for determination of water extractives (General rule 5006).
3. Dilute ethanol extractives: Carry out the method for determination of dilute ethanol-soluble extractives (General rule 5006).

Storage: Store in a ventilated and dry place.
Usage: Pungent-cold exterior-releasing medicinal.
Dosage: 5~10 g.

VLADIMIRIAE RADIX
川木香
Chuan Mu Siang / Chuan Mu Xiang
Common Vladimiria Root

Common vladimiria root is the dried root of *Vladimiria souliei* (Franch.) Ling or *Vladimiria souliei* (Franch.) Ling var. *cinerea* Ling (Fam. Compositae).
It contains not less than 12.0% of dilute ethanol-soluble extractives and not less than 16.0% of water extractives.

Description: Cylindrical or subsemicylindrical, slightly curved, 10~30 cm in length, 1.5~3 diameter. Externally rough, yellowish-brown or dark brown, with visible dense rhomboid mesh striations composed of fiber bundles, pale yellow. Root stocks occasionally with black viscous gelatinous substance result from processing, commonly known as "Hu Tou" or "Oil Head". Texture light, hard and fragile, uneasily broken, fracture uneven, bark yellowish-brown, wood yellow, with visible yellowish-brown oil spots (oil cavity), some of the central part rotten-wood-like. Odor, slightly aromatic; taste, bitter.

Microscopic identification:

1. **Transverse section:** Cork composed of 4~6 layers of cells. Phloem relatively broad, forming regular radiated pattern with xylem. Cambium ring undulate. Fibers bundles yellow, lignified, accompanied by stone cells. Pith intact or withered. Oil cavities scattered in rays and throughout parenchyma in pith. Inulin found in parenchymatous cells.
2. **Powder:** Brownish-yellow. Fibers long-fusiform or elongate, yellow or colorless, 15~35 μm in diameter, the wall 5~15 μm thick, lignified, pits and pit canals distinct. Vessels mostly reticulate and scalariform, 15~140 μm in diameter, the walls lignified. Stone cells fibrous in shape, the walls lignified and thickened. Inulin abundant, present in fan-shaped or irregular clumps. Oil cavities mostly broken, oil droplets rarely present and few prisms of calcium oxalate.

Thin layer chromatographic identification test (General rule 1010.3):

1. Sample solution: Add 2.0 g of powdered sample to 20 mL of ethyl ether, ultrasonicate for 20 minutes and filter. Evaporate the filtrate to dryness, dissolve the residue in 1 mL of methanol.
2. Reference drug solution: Use 2.0 g of the reference drug as the same method described above.
3. Procedure: Use silica gel F_{254} as the coating substance and a solution of toluene and ethyl acetate (19:1) as the developing solvent. Apply 10 μL of each of the above solutions to the plate. Once the top of the solvent rise to about 5~10 cm from the origin, dry in air. Spray with a solution of vanillin in sulfuric acid (Vanillin/H_2SO_4 TS) and heat at 105℃ for 2 minutes until the spots become visible. Examine under visible light. The spots in the chromatogram obtained from the sample solution correspond in R_f values and color to the spots in the chromatogram obtained from the reference drug solution.

Impurities and other requirements:

1. Loss on drying: Not more than 12.0% under heating at 105℃ for 5 hours (General rule 5008).
2. Total ash: Not more than 5.0% (General rule 5004).
3. Acid-insoluble ash: Not more than 1.0% (General rule 5004).

Assay:

1. Water extractives: Carry out the method for determination of water extractives (General rule 5006).
2. Dilute ethanol extractives: Carry out the method for determination of dilute ethanol-soluble extractives (General rule 5006).

Storage: Store in a cool and dry place, and protect from moisture and insects.
Usage: Qi-regulating medicinal.
Dosage: 3~9 g.

XANTHII FRUCTUS
蒼耳子
Cang Er Zih / Cang Er Zi
Cocklebur Fruit

Cocklebur fruit is the dried ripe fruit with involucres of *Xanthium sibiricum* Patr. (Fam. Compositae).
It contains not less than 3.0% of dilute ethanol-soluble extractives and not less than 5.0% of water extractives.

Description: Fusiform or oval, 1~1.5 cm in length, 0.4~0.7 cm in diameter. Involucresyellowish-brown or yellowish-green, with hooked bristles, apex with 2 relatively thick spines, separated or linked up, base with a fruit stalk scar; texture hard and tenacious, the center of transverse section showing a septum and 2 locules, each loculus containing an achene. Achene slightly fusiform, relatively even at one side, apex with a protruding stylopodium; pericarp thin, grayish-black, with longitudinal wrinkles; testa membranous, pale gray; cotyledons 2, oily. Odor, slight; taste, slightly bitter.

Microscopic identification:

1. **Transverse section:** Outside and inside the involucre showing 1 layer epidermal cells. Between the outer and inner epidermis mainly composed of fiber layers, arranged criss-cross, the outer several rows of fibers arranged longitudinally in the lengthwise direction of the fruit, cells polygonal in sectional view; the inner fibers arranged vertically into long strip-shaped, occasionally with hook-like protuberance, fibers scattered with 1 layer of vascular bundles; the remaining all composed of parenchymatous cells. Outside pericarp showing epidermal cells and 1 layer brown pigment layer, inside showing parenchyma tissue, scattered with vascular bundles. Cotyledons contain oil droplets and aleurone grains.
2. **Powder:** Grayish-yellow. Fibers abundant, singly scattered or in bundles of 2 types: one type is slender and fusiform, numerous, wall relatively thin, 425 μm in length, 17 μm in width; the other

type few, wall relatively thickened with distinct pits, 255 μm in length, 15 μm in width. Xylem parenchymatous cells rectangular, with single pits, 96~120 μm in length, 19~24 μm in width. Vessels few, reticulate vessels 210 μm in length, 34 μm in width; spiral vessels 96 μm in length, 12 μm in width. Cotyledon cells contain aleurone grains and oil droplets. Parenchymatous cells of testa subrounded or elongated-rounded, pale yellow.

Thin layer chromatographic identification test (General rule 1010.3):

1. Sample solution: Add 1.0 g of powdered sample to 15 mL of methanol, ultrasonicate for 30 minutes, filter and use the filtrate.
2. Reference drug solution: Use 1.0 g of the reference drug as the same method described above.
3. Procedure: Use silica gel F_{254} as the coating substance and the supernatant of *n*-butanol, glacial acetic acid and water (4:1:5) as the developing solvent. Apply 2 μL of each of the above solutions to the plate. Once the top of the solvent rise to about 5~10 cm from the origin, dry in air. Expose in ammonia vapor until the spots become visible. The yellow spots in the chromatogram obtained from the sample solution correspond in R_f values and color to the spots in the chromatogram obtained from the reference drug solution.

Impurities and other requirements:

1. Loss on drying: Not more than 13.0% under heating at 105℃ for 5 hours (General rule 5008).
2. Total ash: Not more than 8.0% (General rule 5004).
3. Acid-insoluble ash: Not more than 2.0% (General rule 5004).

Assay:

1. Water extractives: Carry out the method for determination of water extractives (General rule 5006).
2. Dilute ethanol extractives: Carry out the method for determination of dilute ethanol-soluble extractives (General rule 5006).

Storage: Store in a dry place.
Usage: Pungent-warm exterior-releasing medicinal.
Dosage: 3~9 g.

ZANTHOXYLI PERICARPIUM
花椒
Hua Jiao / Hua Jiao
Pricklyash Peel

Pricklyash peel is the dried ripe pericarp of *Zanthoxylum schinifolium* Sieb. et Zucc. or *Zanthoxylum bungeanum* Maxim. (Fam. Rutaceae).

It contains not less than 10.0% of dilute ethanol-soluble extractives, not less than 8.0% of water extractives and not less than 1.0% (v/w) of volatile oil.

Description:

1. Pericarp of *Zanthoxylum schinifolium* (Shiang Jiao Tz): 1~3 follicles (mostly 1~3), slightly spheroidal, 3~4 mm in diameter, splitting along dorsal and ventral suture. Exocarp brown-green or yellowish-green, with reticulated wrinkles, scattered with numerous dark and dented oil dots, curved inwards. Endocarp grayish-white or pale yellow, commonly separated from exocarp at the base, curved inwards. Taste, slightly sweet and pungent.
2. Pericarp of *Zanthoxylum bungeanu*m (Hung Jiao): Most follicles singly (occasionally 2, rarely 3), 4~5 mm in diameter, pericarp splitting along ventral suture, slightly splitting along dorsal. Exocarp reddish-purple or reddish-brown, crumpled extremely, scattered with numerous protuberant oil dots, 0.5~1 mm in diameter. Endocarp pale yellow, commonly separated from exocarp at the base, curved inwards, with a small fruit stalk and 1~2 undeveloped carpel, small and granular Odor, strongly aromatic; taste, lastingly pungent and numb.

Microscopic identification:

1. **Transverse section:**
   (1) Pericarp of *Zanthoxylum bungeanum*: 1 layered epidermis covered with cuticle, cells containing brown contents, stomata occasionally found in surface view, 32~42 μm in diameter. Vascular bundles and large oil cavities distributed in mesocarp, oil cavities oblong, 500~900 μm in length, 300~700 μm in diameter, containing pale yellow oil. Parenchymatous cells contain numerous clusters of calcium oxalate, mostly distributed near endocarp, 15~45 μm in diameter. Endocarp composed of several layers of lignified fiber cells, varying in length, arranged alternately, cells strip-shaped near mesocarp, the others long-rounded, subrounded or polygonal, 12~22 μm in diameter.
2. **Powder:**
   (1) Pericarp of *Zanthoxylum schinifolium*: Dark brown. Endocarp cells fusiform, varying in length, arranged alternately or overlapped vertically, subrectangular or subpolygonal, 10~27 μm in diameter, walls slightly thickened and lignified. Epidermal cells of pericarp subpolygonal in surface view, walls thin, with dense and horny-like striations on the surface, containing hesperidin crystals. Stomata rare. Epidermal cells of testa reddish-brown or brownish-black; reddish-brown ones with anticlinal walls thin

or slightly moniliform thickened; brownish-black ones with indistinct cell boundaries. Clusters of calcium oxalate 8~35 μm in diameter. Slightly lignified hypodermal cells of pericarp, fine vessels, xylem fibers and hesperidin crystals also present.

(2) Pericarp of *Zanthoxylum bungeanum*: Dark brown. Outer walls of exocarp covered with cuticle, cell walls thin, containing brown contents, stomata occasionally found in surface view, 32~42 μm in diameter. Oil cavities large, oblong, 500~900 μm in length, 300~700 μm in diameter, containing pale yellow oil. Parenchymatous cells of mesocarp contain numerous clusters of calcium oxalate, mostly distributed near endocarp, 15~45 μm in diameter. Endocarp composed of several layers of lignified fiber cells, varying in length, arranged alternately, strip-shaped, long-rounded, subrounded or polygonal, 12~22 μm in diameter. Spiral vessels occasionally visible, about 10 μm in diameter.

Thin layer chromatographic identification test (General rule 1010.3):

1. Sample solution: Add 2.0 g of powdered sample to 10 mL of ethyl ether, shake well, macerate for all night, filter, evaporate the filtrate to 1 mL, and use the filtrate.
2. Reference drug solution: Use 2.0 g of the reference drug as the same method described above.
3. Procedure: Use silica gel F_{254} as the coating substance and a solution of *n*-hexane and ethyl acetate (4:1) as the developing solvent. Apply 5 μL of each of the above solutions to the plate. Once the top of the solvent rise to about 5~10 cm from the origin, dry in air. Examine under the ultraviolet light at 365 nm. The spots in the chromatogram obtained from the sample solution correspond in R_f values and color to the spots in the chromatogram obtained from the reference drug solution.

Impurities and other requirements:

1. Loss on drying: Not more than 16.0% under heating at 105℃ for 5 hours (General rule 5008).
2. Total ash: Not more than 9.0% (General rule 5004).
3. Acid-insoluble ash: Not more than 2.0% (General rule 5004).

Assay:

1. Water extractives: Carry out the method for determination of water extractives (General rule 5006).
2. Dilute ethanol extractives: Carry out the method for determination of dilute ethanol-soluble extractives (General rule 5006).
3. Volatile oil: Carry out the method for determination of volatile oil (General rule 5007).

Storage: Refrigerate or store in a cool and dry place, preserve in a well-closed container, and protect from insects.
Usage: Interior-warming medicinal.
Dosage: 1~5 g.

ZINGIBERIS RHIZOMA
乾薑
Gan Jiang / Gan Jiang
Dry Ginger Rhizome

Dry ginger rhizome is the dried rhizome of *Zingiber officinale* Rosc. (Fam. Zingiberaceae).
It contains not less than 10.0% of dilute ethanol-soluble extractives, not less than 15.0% of water extractives and not less than 0.6% of 6-gingerol.

Description: In flattened pieces with fingered branches, branched parts usually with remains of scale leaves, apex with stem scars or buds, 4~10 cm in length, 1~2 cm thick. Externally grayish-yellow or grayish-brown. Texture compact, rough, with longitudinal wrinkles and distinct annulated-nodes, fracture yellowish-white or grayish-yellow, scattered with yellow oil drops. Odor, aromatic; taste, pungent.

Microscopic identification:

1. **Transverse section:** The outermost layer was cork composed of several rows of flattened cork cells. Cortex scattered with leaf-trace vascular bundles. Endodermis distinct, with Casparian strip. Collateral vascular bundles scattered in stele, small vascular bundles arranged densely in pericycle, the stele occupied the most part of the rhizome. Xylem scattered with unlignified fiber bundles. Parenchyma tissue contains oil cells and ovate starch granules.
2. **Powder:** Pale yellowish-brown. Oil cells scattered in parenchymatous cells, containing yellow oil droplets or dark red contents. Starch granules numerous, ovate or elliptical, dotted hilum located at the small end, with distinct striations. Vessels mostly spiral, reticular, scalariform or annular, 15~80 μm in diameter. Fibers scattered or in bundles, unlignified, with fine oblique pits and septa, 15~40 μm in diameter.

Thin layer chromatographic identification test (General rule 1010.3):

1. Sample solution: Add 2.0 g of powdered sample to 10 mL of acetone, ultrasonicate for 30 minutes, filter and use the filtrate.
2. Reference drug solution: Use 2.0 g of the reference drug as the same method described above.
3. Procedure: Use silica gel F_{254} as the coating substance and a solution of toluene and acetone

(4:1) as the developing solvent. Apply 5 μL of each of the above solutions to the plate. Once the top of the solvent rise to about 5~10 cm from the origin, dry in air. Spray with a solution of vanillin in sulfuric acid (vanillin/H_2SO_4 TS) and heat at 105℃ for 2 minutes until the spots become visible. Examine under the visible light. The spots in the chromatogram obtained from the sample solution correspond in R_f values and color to the spots in the chromatogram obtained from the reference drug solution.

Impurities and other requirements:

1. Total ash: Not more than 6.0% (General rule 5004).
2. Acid-insoluble ash: Not more than 1.0% (General rule 5004).
3. Arsenic (As): Not more than 5.0 ppm (General rule 3006, 3049, 3050).

Assay:

1. 6-Gingerol:
   (1) Mobile phase: A solution of acetonitrile, methanol and water (40:5:55). The ratio varies as required.
   (2) Reference standard solution: Weigh accurately a quantity of 6-gingerol and dissolve in methanol to produce a solution containing 0.1 mg per mL.
   (3) Sample solution: Weigh accurately 0.25 g of the powdered sample, transfer to a conical flask with stopper, accurately add 20 mL of 75% methanol, ultrasonicate for 40 minutes, cool and weigh again, replenish the loss of solvent with 75% methanol and mix well, filter and use the filtrate.
   (4) Chromatographic system: The liquid chromatography is equipped with an ultraviolet absorption photometer (wavelength: 280 nm) and a column packed with octadecylsilanized silica gel. The number of theoretical plates of the peak of 6-gingerol should not be less than 5,000.
   (5) Procedure: Inject accurately 10 μL of each of the reference standard solution and the sample solution into the liquid chromatography apparatus, and calculate the content.
2. Water extractives: Carry out the method for determination of water extractives (General rule 5006).
3. Dilute ethanol extractives: Carry out the method for determination of dilute ethanol-soluble extractives (General rule 5006).

Storage: Store in a cool and dry place, and protect from moisture and insects.
Usage: Interior-warming and cold-dispelling medicinal.
Dosage: 3~9 g.

ZIZIPHI SPINOSAE SEMEN
酸棗仁
Suan Zao Ren / Suan Zao Ren
Jujube Seed

Jujube seed is the dried ripe seed of *Ziziphus jujuba* Mill. var. *spinosa* (Bunge) Hu ex H. F. Chou (Fam. Rhamnaceae).
It contains not less than 6.0% of dilute ethanol-soluble extractives and not less than 7.0% of water extractives.

Description: Oblate or flattened ellipsoidal, 5~9 mm in length, 5~7 mm in width, about 3 mm thick. Externally purplish-red or purplish-brown, smooth and lustrous, some with fissures. One surface relatively even, with a protuberant longitudinal rib, the other surface slightly protuberant. One end dented, with a linear hilum; the other end scattered with a finely raised chalaza. Testa relatively fragile; endosperm white; cotyledons 2, pale yellow, oily. Odor, slight; taste, weak.

Microscopic identification:

1. **Powder:** Brownish-red. Palisade cells of testa brownish-red, with polygonal surface, about 15 μm in diameter, walls thickened and lignified, lumen small. Endotesta cells brownish-yellow, with rectangular or subsquare surface, wall moniliform thickened and lignified. Epidermal cells of cotyledons contain fine clusters of calcium oxalate and prism crystals.

Thin layer chromatographic identification test (General rule 1010.3):

1. Sample solution: Add 5.0 g of powdered sample to 15 mL of methanol, ultrasonicate for 30 minutes, filter, evaporate the filtrate to dryness, dissolve the residue in 1 mL of methanol.
2. Reference drug solution: Use 5.0 g of the reference drug as the same method described above.
3. Reference standard solution: Weigh accurately a quantity of jujuboside A and dissolve in methanol to produce a solution containing 1.0 mg per mL.
4. Procedure: Use silica gel F_{254} as the coating substance and the supernatant of *n*-butanol, glacial acetic acid and water (20:6:25) and equilibrate for about 20 min as the developing solvent. Apply 5 μL of each of the above solutions to the plate. Once the top of the solvent rise to about 5~10 cm from the origin, dry in air. Spray with a solution vanillin in sulfuric acid (Vanillin/H_2SO_4 TS) and heat at 105℃ until the spots become visible. Examine under the visible light. The spots in the chromatogram obtained from the sample solution correspond in R_f values and color to the spots in the chromatogram obtained from the reference drug solution and the reference standard solution.

Impurities and other requirements:

1. Foreign matter: Not more than 5.0%, including endocarp (General rule 5003).

2. Loss on drying: Not more than 12.0% under heating at 105℃ for 5 hours (General rule 5008).
3. Total ash: Not more than 7.0% (General rule 5004).
4. Acid-insoluble ash: Not more than 3.0% (General rule 5004).

Assay:
1. Water extractives: Carry out the method for determination of water extractives (General rule 5006).
2. Dilute ethanol extractives: Carry out the method for determination of dilute ethanol-soluble extractives (General rule 5006).

Storage: Refrigerate or store in a cool and dry place, and protect from insects.
Usage: Tranquillizing medicinal (Heart-nourishing tranquillizing medicinal).
Dosage: 3~10 g.

Ministry of Health and Welfare 衛生福利部

Indexes

Official Names

A

ABUTILI SEMEN 苘麻子 1
ACHYRANTHIS BIDENTATAE RADIX 牛膝 1
ACONITI KUSNEZOFFII RADIX 草烏 2
ACONITI LATERALIS RADIX PREPARATUM 附子 3
ACONITI RADIX 川烏 5
ACORI GRAMINEI RHIZOMA 石菖蒲 6
ADENOPHORAE RADIX 南沙參 7
AGASTACHIS HERBA 藿香 8
AGRIMONIAE HERBA 仙鶴草 9
AILANTHI CORTEX 臭椿皮 10
AKEBIAE CAULIS 木通 10
ALBIZIAE CORTEX 合歡皮 11
ALISMATIS RHIZOMA 澤瀉 12
ALLII MACROSTEMONIS BULBUS 薤白 13
ALLII TUBEROSI SEMEN 韭菜子 14
ALPINIAE KATSUMADAI SEMEN 草豆蔻 14
ALPINIAE OFFICINARI RHIZOMA 高良薑 15
ALPINIAE OXYPHYLLAE FRUCTUS 益智 17
AMOMI FRUCTUS 砂仁 18
AMOMI ROTUNDUS FRUCTUS 豆蔻 19
AMPELOPSIS RADIX 白蔹 20
ANEMARRHENAE RHIZOMA 知母 21
ANGELICAE DAHURICAE RADIX 白芷 22
ANGELICAE PUBESCENTIS RADIX 獨活 23
ANGELICAE SINENSIS RADIX 當歸 24
ANISI STELLATI FRUCTUS 八角茴香 26
AQUILARIAE RESINATUM LIGNUM 沉香 26
ARCTII FRUCTUS 牛蒡子 27
ARECAE PERICARPIUM 大腹皮 28
ARECAE SEMEN 檳榔 29
ARISAEMATIS RHIZOMA 天南星 30
ARMENIACAE AMARUM SEMEN 苦杏仁 31
ARNEBIAE RADIX 紫草 32
ARTEMISIAE ANNUAE HERBA 青蒿 33
ARTEMISIAE ARGYI FOLIUM 艾葉 34
ARTEMISIAE SCOPARIAE HERBA 茵陳 35
ASARI RADIX ET RHIZOMA 細辛 36
ASPARAGI RADIX 天門冬 37
ASTERIS RADIX ET RHIZOMA 紫菀 38
ASTRAGALI COMPLANATI SEMEN 沙苑蒺藜 39
ASTRAGALI RADIX 黃耆 39
ATRACTYLODIS MACROCEPHALAE RHIZOMA 白朮 41
ATRACTYLODIS RHIZOMA 蒼朮 42
AUCKLANDIAE RADIX 木香 42
AURANTII IMMATURUS FRUCTUS 枳實 44

B

BAMBUSAE CAULIS IN TAENIA 竹茹 45
BAMBUSAE CONCRETIO SILICEA 天竺黃 45
BAPHICACANTHI CUSIAE RHIZOMA ET RADIX 南板藍根 46
BELAMCANDAE RHIZOMA 射干 46
BENINCASAE SEMEN 冬瓜子 47
BLETILLAE RHIZOMA 白及 48
BOMBYCIS FAECES 蠶砂 49
BOMBYX BATRYTICATUS 白殭蠶 50
BORNEOLUM 冰片 50
BOVIS CALCULUS 牛黃 51
BUDDLEJAE FLOS 密蒙花 52
BUPLEURI RADIX 柴胡 52

C

CANNABIS FRUCTUS 火麻仁 54
CARTHAMI FLOS 紅花 55
CARYOPHYLLI FLOS 丁香 55
CASSIAE SEMEN 決明子 56
CATECHU 兒茶 58
CELOSIAE SEMEN 青葙子 59

CHAENOMELIS FRUCTUS 木瓜 59
CHEBULAE FRUCTUS 訶子 60
CHINENSIS GALLA 五倍子 61
CHRYSANTHEMI FLOS 菊花 62
CHUANXIONG RHIZOMA 芎藭 63
CIBOTII RHIZOMA 狗脊 64
CICADAE PERIOSTRACUM 蟬蛻 65
CIMICIFUGAE RHIZOMA 升麻 66
CINNAMOMI CORTEX 肉桂 67
CINNAMOMI RAMULUS 桂枝 68
CIRSII HERBA 小薊 69
CIRSII JAPONICI HERBA ET RADIX 大薊 69
CISTANCHES HERBA 肉蓯蓉 71
CITRI EXOCARPIUM RUBRUM 橘紅 72
CITRI GRANDIS EXOCARPIUM 化橘紅 73
CITRI IMMATURUS FRUCTUS 枳殼 74
CITRI RETICULATAE PERICARPIUM 陳皮 75
CITRI RETICULATAE PERICARPIUM VIRIDE 青皮 76
CITRI SARCODACTYLIS FRUCTUS 佛手柑 78
CLEMATIDIS CAULIS 川木通 78
CLEMATIDIS RADIX ET RHIZOMA 威靈仙 79
CNIDII FRUCTUS 蛇床子 80
CODONOPSIS RADIX 黨參 82
COICIS SEMEN 薏苡仁 83
COPTIDIS RHIZOMA 黃連 83
CORDYCEPS 冬蟲夏草 84
CORNI SARCOCARPIUM 山茱萸 85
CORYDALIS RHIZOMA 延胡索 86
CRATAEGI FRUCTUS 山楂 88
CROCI STIGMA 番紅花 89
CROTONIS SEMEN 巴豆 90
CURCULIGINIS RHIZOMA 仙茅 91
CURCUMAE LONGAE RHIZOMA 薑黃 92
CURCUMAE RADIX 鬱金 93
CURCUMAE RHIZOMA 莪朮 94
CUSCUTAE SEMEN 菟絲子 95
CYATHULAE RADIX 川牛膝 96
CYNANCHI ATRATI RADIX ET RHIZOMA 白薇 97
CYNANCHI STAUNTONII RHIZOMA ET RADIX 白前 98
CYNOMORII HERBA 鎖陽 99
CYPERI RHIZOMA 香附 99

D

DENDROBII CAULIS 石斛 100
DESCURAINIAE SEMEN 葶藶子 155
DESMODII STYRACIFOLII HERBA 廣金錢草 102
DIANTHI HERBA 瞿麥 104
DICTAMNI RADICIS CORTEX 白鮮皮 105
DIOSCOREAE HYPOGLAUCAE RHIZOMA 粉萆薢 105
DIOSCOREAE RHIZOMA 山藥 106
DIPSACI RADIX 續斷 107
DRACONIS SANGUIS 血竭 108

E

ECKLONIAE THALLUS 昆布 108
ECLIPTAE HERBA 墨旱蓮 109
EPHEDRAE HERBA 麻黃 110
EPIMEDII FOLIUM 淫羊藿 112
EQUISETI HIEMALIS HERBA 木賊 113
ERIOBOTRYAE FOLIUM 枇杷葉 114
ERIOCAULI FLOS 穀精草 115
EUCOMMIAE CORTEX 杜仲 116
EUPATORII HERBA 佩蘭 116
EURYALES SEMEN 芡實 117
EVODIAE FRUCTUS 吳茱萸 118

F

FARFARAE FLOS 款冬花 119
FOENICULI FRUCTUS 小茴香 120
FORSYTHIAE FRUCTUS 連翹 121
FRAXINI CORTEX 秦皮 122

FRITILLARIAE THUNBERGII BULBUS 浙貝母 123

G

GALLI GIGERIAE ENDOTHELIUM CORNEUM 雞內金 124
GARDENIAE FRUCTUS 梔子 124
GASTRODIAE RHIZOMA 天麻 126
GECKO 蛤蚧 127
GENTIANAE MACROPHYLLAE RADIX 秦艽 127
GENTIANAE RADIX ET RHIZOMA 龍膽 130
GINKGO SEMEN 白果 131
GINSENG RADIX 人參 132
GLEDITSIAE ABNORMALIS FRUCTUS 豬牙皂 134
GLEDITSIAE FRUCTUS 皂莢 135
GLEDITSIAE SPINA 皂角刺 135
GLEHNIAE RADIX 北沙參 136
GLYCYRRHIZAE RADIX ET RHIZOMA 甘草 136
GRANATI PERICARPIUM 石榴皮 138
GYPSUM FIBROSUM 石膏 139

H

HAEMATITUM 代赭石 139
HALIOTIDIS CONCHA 石決明 139
HEDYOTIDIS DIFFUSAE HERBA 白花蛇舌草 141
HEDYSARI RADIX 紅耆 141
HIRUDO 水蛭 142
HOMALOMENAE RHIZOMA 千年健 143
HORDEI GERMINATUS FRUCTUS 麥芽 143
HOUTTUYNIAE HERBA 魚腥草 144

I

IMPERATAE RHIZOMA 白茅根 145
INULAE FLOS 旋覆花 146
ISATIDIS FOLIUM 大青葉 147
ISATIDIS RADIX 北板藍根148

J

JUJUBAE FRUCTUS 大棗 148
JUNCI MEDULLA 燈心草 149

K

KAEMPFERIAE RHIZOMA 山柰 149
KAKI CALYX 柿蒂 150
KANSUI RADIX 甘遂 151
KOCHIAE FRUCTUS 地膚子 152

L

LABLAB ALBUM SEMEN 白扁豆 153
LAMINARIAE THALLUS 昆布 108
LEONURI FRUCTUS 茺蔚子 154
LEONURI HERBA 益母草 154
LEPIDII SEMEN 葶藶子 155
LIGUSTICI RHIZOMA ET RADIX 藁本 156
LIGUSTRI LUCIDI FRUCTUS 女貞子 158
LILII BULBUS 百合 158
LINDERAE RADIX 烏藥 159
LIQUIDAMBARIS FRUCTUS 路路通 160
LONICERAE FLOS 金銀花 161
LONICERAE JAPONICAE CAULIS 忍冬藤 163
LOPHATHERI CAULIS ET FOLIUM 淡竹葉 164
LYCII FRUCTUS 枸杞子 165
LYCII RADICIS CORTEX 地骨皮 166
LYCOPI HERBA 澤蘭 167
LYCOPODII HERBA 伸筋草 168
LYGODII SPORA 海金沙 168
LYSIMACHIAE HERBA 金錢草 169

M

MAGNOLIAE CORTEX 厚朴 170
MAGNOLIAE FLOS 辛夷 172
MALVAE FRUCTUS 冬葵果 173
MANTIDIS OÖTHECA 桑螵蛸 174
MENTHAE HERBA 薄荷 175
MERETRICIS ET CYCLINAE CONCHA 蛤殼 176
MOMORDICAE FRUCTUS 羅漢果 176

MORI FOLIUM 桑葉 177
MORI RADICIS CORTEX 桑白皮 178
MORI RAMULUS 桑枝 179
MORINDAE OFFICINALIS RADIX 巴戟天 180
MOSLAE HERBA 香薷 181
MOUTAN RADICIS CORTEX 牡丹皮 181
MUME FRUCTUS 烏梅 183
MYRISTICAE SEMEN 肉豆蔻 184
MYRRHA 沒藥 185

N

NATRII SULFAS 芒硝 185
NATURALIS INDIGO 青黛 186
NELUMBINIS FOLIUM 荷葉 187
NELUMBINIS RHIZOMATIS NODUS 藕節 188
NELUMBINIS SEMEN 蓮子 189
NOTOGINSENG RADIX 三七 189
NOTOPTERYGII RHIZOMA ET RADIX 羌活 191

O

OLIBANUM 乳香 192
OPHIOPOGONIS RADIX 麥門冬 193
ORYZAE GERMINATUS FRUCTUS 穀芽 193
OSTREAE CONCHA 牡蠣 194

P

PAEONIAE ALBA RADIX 白芍 195
PAEONIAE RUBRA RADIX 赤芍 196
PANACIS QUINQUEFOLII RADIX 西洋參 197
PERILLAE CAULIS 紫蘇梗 199
PERILLAE FOLIUM 紫蘇葉 200
PERILLAE FRUCTUS 紫蘇子 200
PERSICAE SEMEN 桃仁 201
PEUCEDANI RADIX 前胡 203
PHARBITIDIS SEMEN 牽牛子 204
PHELLODENDRI CORTEX 黃蘗 205
PHERETIMA 地龍 206
PHOTINIAE FOLIUM 石南葉 207
PHRAGMITIS RHIZOMA 蘆根 208
PINELLIAE RHIZOMA 半夏 208
PIPERIS FRUCTUS 胡椒 209
PLANTAGINIS HERBA 車前草 210
PLANTAGINIS SEMEN 車前子 211
PLATYCLADI RAMULUS ET FOLIUM 側柏葉 213
PLATYCLADI SEMEN 柏子仁 213
PLATYCODI RADIX 桔梗 214
POGOSTEMONIS HERBA 廣藿香 215
POLYGALAE RADIX 遠志 216
POLYGONATI ODORATI RHIZOMA 玉竹 216
POLYGONATI RHIZOMA 黃精 217
POLYGONI CUSPIDATI RHIZOMA ET RADIX 虎杖 218
POLYGONI MULTIFLORI CAULIS 首烏藤 219
POLYGONI MULTIFLORI RADIX 何首烏 220
POLYPORUS 豬苓 221
PORIA 茯苓 222
PORTULACAE HERBA 馬齒莧 223
PRUNELLAE SPICA 夏枯草 223
PSEUDOSTELLARIAE RADIX 太子參 224
PSORALEAE FRUCTUS 補骨脂 225
PUERARIAE RADIX 葛根 226
PULSATILLAE RADIX 白頭翁 227
PYRROSIAE FOLIUM 石韋 228

Q

QUISQUALIS FRUCTUS 使君子 230

R

RAPHANI SEMEN 萊菔子 231
REHMANNIAE RADIX 地黃 231
RHAPONTICI RADIX 漏蘆 233
RHEI RADIX ET RHIZOMA 大黃 234
ROSAE LAEVIGATAE FRUCTUS 金櫻子 235
RUBI FRUCTUS 覆盆子 236
RUBIAE RADIX ET RHIZOMA 茜草 237

S

SALVIAE MILTIORRHIZAE RADIX ET RHIZOMA 丹參 238
SANGUISORBAE RADIX 地榆 239
SAPOSHNIKOVIAE RADIX 防風 241
SAPPAN LIGNUM 蘇木 241
SCHISANDRAE FRUCTUS 五味子 242
SCHIZONEPETAE HERBA 荊芥 243
SCORPIO 全蠍 244
SCROPHULARIAE RADIX 玄參 245
SCUTELLARIAE BARBATAE HERBA 半枝蓮 246
SCUTELLARIAE RADIX 黃芩 247
SELAGINELLAE HERBA 卷柏 248
SENNAE FOLIUM 番瀉葉 249
SEPIAE ENDOCONCHA 海螵蛸 250
SESAMI NIGRUM SEMEN 胡麻仁 251
SIEGESBECKIAE HERBA 豨薟草 251
SINAPIS ALBAE SEMEN 白芥子 253
SMILACIS GLABRAE RHIZOMA 土茯苓 254
SOJAE SEMEN PREPARATUM 淡豆豉 255
SOPHORAE FLAVESCENTIS RADIX 苦參 255
SOPHORAE IMMATURUS FLOS 槐米 256
SOPHORAE TONKINENSIS RADIX 山豆根 257
SPARGANII RHIZOMA 三稜 259
SPATHOLOBI CAULIS 雞血藤 259
STEMONAE RADIX 百部 260
STRYCHNI SEMEN 馬錢子 262

T

TALCUM 滑石 263
TARAXACI HERBA 蒲公英 263
TAXILLI HERBA 桑寄生 264
TETRAPANACIS MEDULLA 通草 265
TOOSENDAN FRUCTUS 川楝子 265
TRACHELOSPERMI CAULIS CUM FOLIUM 絡石藤 267
TRIBULI FRUCTUS 蒺藜 267
TRICHOSANTHIS RADIX 栝樓根 268
TRICHOSANTHIS SEMEN 栝樓仁 269
TRIONYCIS CARAPAX 鼈甲 270
TRITICI LEVIS FRUCTUS 浮小麥 270
TROGOPTERORI FAECES 五靈脂 271
TSAOKO FRUCTUS 草果 271
TYPHAE POLLEN 蒲黃 272

U

UNCARIAE RAMULUS CUM UNCIS 鈎藤 273

V

VACCARIAE SEMEN 王不留行274
VIGNAE SEMEN 赤小豆 275
VIOLAE HERBA 紫花地丁 275
VISCI HERBA 槲寄生 276
VITICIS SIMPLICIFOLIAE FRUCTUS 蔓荊子 277
VLADIMIRIAE RADIX 川木香 278

X

XANTHII FRUCTUS 蒼耳子 279

Z

ZANTHOXYLI PERICARPIUM 花椒 280
ZINGIBERIS RHIZOMA 乾薑 281
ZIZIPHI SPINOSAE SEMEN 酸棗仁 282

Chinese Names

二劃

【丁、人、八】

丁香 55
人參 132
八角茴香 26

三劃

【三、千、土、大、女、小、山、川】

三七 189
三稜 259
千年健 143
土茯苓 254
大青葉 147
大棗 148
大黃 234
大腹皮 28
大蓟 69
女貞子 158
小茴香 120
小蓟 69
山豆根 257
山柰 149
山茱萸 85
山楂 88
山藥 106
川木香 278
川木通 78
川牛膝 96
川烏 5
川楝子 265

四劃

【丹、五、化、升、天、太、巴、木、水、火、牛、王】

丹參 238
五味子 242
五倍子 61
五靈脂 271
化橘紅 73
升麻 66
天竺黃 45
天門冬 37
天南星 30
天麻 126
太子參 224
巴豆 90
巴戟天 180
木瓜 59
木香 42
木通 10
木賊 113
水蛭 142
火麻仁 54
牛黃 51
牛蒡子 27
牛膝 1
王不留行 274

五劃

【代、仙、冬、北、半、玄、玉、甘、白、石】

代赭石 139
仙茅 91
仙鶴草 9
冬瓜子 47
冬葵果 173
冬蟲夏草 84
北沙參 136
北板藍根 148
半枝蓮 246
半夏 208
玄參 245
玉竹 216
甘草 136
甘遂 151
白及 48
白朮 41
白芍 195
白果 131
白花蛇舌草 141
白芥子 253
白芷 22
白前 98
白扁豆 153
白茅根 145
白頭翁 227
白薇 97
白鮮皮 105
白殭蠶 50
白蔹 20
石決明 139
石南葉 207
石韋 228
石斛 100
石菖蒲 6
石榴皮 138
石膏 139

六劃

【全、冰、合、地、百、竹、肉、艾、血、西】

全蠍 244
冰片 50
合歡皮 11
地骨皮 166
地黃 231
地榆 239
地膚子 152
地龍 206
百合 158
百部 260
竹茹 45
肉豆蔻 184

肉桂 67
肉蓯蓉 71
艾葉 34
血竭 108
西洋參 197

七劃
【佛、何、伸、吳、忍、杜、沙、沉、決、沒、牡、皂、芒、豆、赤、車、辛、防、芎】
佛手柑 78
何首烏 220
伸筋草 168
吳茱萸 118
忍冬藤 163
杜仲 116
沙苑蒺藜 39
沉香 26
決明子 56
沒藥 185
牡丹皮 181
牡蠣 194
皂角刺 135
皂莢 135
芒硝 185
豆蔻 19
赤小豆 275
赤芍 196
車前子 211
車前草 210
辛夷 172
防風 241
芎藭 63

八劃
【乳、使、佩、兒、卷、延、昆、枇、狗、知、羌、花、虎、金、附、青、芡】
乳香 192
使君子 230
佩蘭 116
兒茶 58
卷柏 248
延胡索 86
昆布 108
枇杷葉 114
狗脊 64
知母 21
羌活 191
花椒 280
虎杖 218
金銀花 161
金錢草 169
金櫻子 235
附子 3
青皮 76
青葙子 59
青蒿 33
青黛 186
芡實 117

九劃
【前、南、苘、厚、威、柿、枸、柏、砂、紅、胡、苦、韭、首、香、枳】
前胡 203
南沙參 7
南板藍根 46
苘麻子 1
厚朴 170
威靈仙 79
柿蒂 150
枸杞子 165
柏子仁 213
砂仁 18
紅花 55
紅耆 141
胡麻仁 251
胡椒 209
苦杏仁 31
苦參 255
韭菜子 14
首烏藤 219
香附 99
香薷 181
枳殼 74
枳實 44

十劃
【芫、夏、射、桂、桔、桑、柴、桃、海、浙、浮、烏、益、秦、粉、臭、荊、草、茵、馬、高、栝、茜、茯】
芫蔚子 154
夏枯草 223
射干 46
桂枝 68
桔梗 214
桑白皮 178
桑枝 179
桑寄生 264
桑葉 177
桑螵蛸 174
柴胡 52
桃仁 201
海金沙 168
海螵蛸 250
浙貝母 123
浮小麥 270
烏梅 183
烏藥 159
益母草 154
益智 17
秦皮 122
秦艽 127
粉萆薢 105
臭椿皮 10
荊芥 243
草豆蔻 14
草果 271
草烏 2
茵陳 35
馬齒莧 223

Ministry of Health and Welfare 衛生福利部

馬錢子 262
高良薑 15
栝樓仁 269
栝樓根 268
茜草 237
茯苓 222

十一劃
【乾、側、密、旋、梔、淡、淫、牽、細、荷、蛇、通、連、陳、魚、麥、麻、莪】
乾薑 281
側柏葉 213
密蒙花 52
旋覆花 146
梔子 124
淡竹葉 164
淡豆豉 255
淫羊藿 112
牽牛子 204
細辛 36
荷葉 187
蛇床子 80
通草 265
連翹 121
陳皮 75
魚腥草 144
麥芽 143
麥門冬 193
麻黃 110
莪朮 94

十二劃
【款、番、紫、絡、萊、鈎、菊、菟、蛤、訶、黃】
款冬花 119
番紅花 89
番瀉葉 249
紫花地丁 275
紫草 32
紫菀 38
紫蘇子 200
紫蘇梗 199
紫蘇葉 200
絡石藤 267
萊菔子 231
鈎藤 273
菊花 62
菟絲子 95
蛤蚧 127
蛤殼 176
訶子 60
黃芩 247
黃耆 39
黃連 83
黃精 217
黃蘗 205

十三劃
【滑、當、葛、補、路、葶】
滑石 263
當歸 24
葛根 226
補骨脂 225
路路通 160
葶藶子 155

十四劃
【槐、漏、蒲、蒼、遠、酸、蒺、豨】
槐米 256
漏蘆 233
蒲公英 263
蒲黃 272
蒼朮 42
蒼耳子 279
遠志 216
酸棗仁 282
蒺藜 267
豨薟草 251

十五劃
【廣、穀、蓮、蔓、豬、墨、槲】
廣金錢草 102
廣藿香 215
穀芽 193
穀精草 115
蓮子 189
蔓荊子 277
豬牙皂 134
豬苓 221
墨旱蓮 109
槲寄生 276

十六劃
【橘、澤、燈、獨、龍】
橘紅 72
澤瀉 12
澤蘭 167
燈心草 149
獨活 23
龍膽 130

十七劃
【薄、薑、薏、薤】
薄荷 175
薑黃 92
薏苡仁 83
薤白 13

十八劃
【藁、檳、瞿、蟬、覆、鎖、雞】
藁本 156
檳榔 29
瞿麥 104
蟬蛻 65
覆盆子 236
鎖陽 99
雞內金 124
雞血藤 259

Ministry of Health and Welfare 衛生福利部

十九劃

【羅、藕】

羅漢果 176
藕節 188

二十劃

【蘆、蘇、黨、藿】

蘆根 208
蘇木 241
黨參 82
藿香 8

二十一劃

【續】

續斷 107

二十四劃

【蠶、鼈】

蠶砂 49
鼈甲 270

二十九劃

【鬱】

鬱金 93

Ministry of Health and Welfare 衛生福利部

Names in Tongyong Pinyin Form

A

Ai Ye	艾葉	34

B

Ba Dou	巴豆	90
Ba Ji Tian	巴戟天	180
Ba Jiao Huei Siang	八角茴香	26
Bai Bian Dou	白扁豆	153
Bai Bu	百部	260
Bai Cian	白前	98
Bai Guo	白果	131
Bai He	百合	158
Bai Hua She She Cao	白花蛇舌草	141
Bai Jhih	白芷	22
Bai Jhu	白朮	41
Bai Ji	白及	48
Bai Jiang Can	白殭蠶	50
Bai Jie Zih	白芥子	253
Bai Lian	白蘞	20
Bai Mao Gen	白茅根	145
Bai Shao	白芍	195
Bai Sian Pi	白鮮皮	105
Bai Tou Wong	白頭翁	227
Bai Wei	白薇	97
Ban Jhih Lian	半枝蓮	246
Ban Sia	半夏	208
Bei Ban Lan Gen	北板藍根	148
Bei Sha Shen	北沙參	136
Bie Jia	鼈甲	270
Bin Lang	檳榔	29
Bing Pian	冰片	50
Bo He	薄荷	175
Bo Zih Ren	柏子仁	213
Bu Gu Jhih	補骨脂	225

C

Can Sha	蠶砂	49
Cang Er Zih	蒼耳子	279
Cang Jhu	蒼朮	42
Cao Dou Kou	草豆蔻	14
Cao Guo	草果	271
Cao Wu	草烏	2
Ce Bo Ye	側柏葉	213
Chai Hu	柴胡	52
Chan Tuei	蟬蛻	65
Che Cian Cao	車前草	210
Che Cian Zih	車前子	211
Chen Pi	陳皮	75
Chen Siang	沉香	26
Chih Shao	赤芍	196
Chih Siao Dou	赤小豆	275
Chong Wei Zih	茺蔚子	154
Chou Chun Pi	臭椿皮	10
Chuan Lian Zih	川楝子	265
Chuan Mu Siang	川木香	278
Chuan Mu Tong	川木通	78
Chuan Niou Si	川牛膝	96
Chuan Wu	川烏	5
Cian Cao	茜草	237
Cian Hu	前胡	203
Cian Nian Jian	千年健	143
Cian Niou Zih	牽牛子	204
Cian Shih	芡實	117
Ciang Huo	羌活	191
Cin Jiao	秦艽	127
Cin Pi	秦皮	122
Cing Dai	青黛	186
Cing Hao	青蒿	33
Cing Ma Zih	苘麻子	1
Cing Pi	青皮	76
Cing Siang Zih	青葙子	59
Cyong Cyong	芎藭	63
Cyuan Sie	全蠍	244

D

Da Cing Ye	大青葉	147

Da Fu Pi	大腹皮	28
Da Huang	大黃	234
Da Ji	大薊	69
Da Zao	大棗	148
Dai Jhe Shih	代赭石	139
Dan Dou Chih	淡豆豉	255
Dan Jhu Ye	淡竹葉	164
Dan Shen	丹參	238
Dang Guei	當歸	24
Dang Shen	黨參	82
Deng Sin Cao	燈心草	149
Di Fu Zih	地膚子	152
Di Gu Pi	地骨皮	166
Di Huang	地黃	231
Di Long	地龍	206
Di Yu	地榆	239
Ding Sing	丁香	55
Dong Chong Sia Cao	冬蟲夏草	84
Dong Gua Zih	冬瓜子	47
Dong Kuei Guo	冬葵果	173
Dou Kou	豆蔻	19
Du Huo	獨活	23
Du Jhong	杜仲	116

E

E Jhu	莪朮	94
Er Cha	兒茶	58

F

Fan Hong Hua	番紅花	89
Fan Sie Ye	番瀉葉	249
Fang Fong	防風	241
Fen Bei Jie	粉萆薢	105
Fo Shou Gan	佛手柑	78
Fu Ling	茯苓	222
Fu Pen Zih	覆盆子	236
Fu Siao Mai	浮小麥	270
Fu Zih	附子	3

G

Gan Cao	甘草	136
Gan Jiang	乾薑	281
Gan Suei	甘遂	151
Gao Ben	藁本	156
Gao Liang Jiang	高良薑	15
Ge Gen	葛根	226
Ge Jie	蛤蚧	127
Ge Ke	蛤殼	176
Gou Ci Zih	枸杞子	165
Gou Ji	狗脊	64
Gou Teng	鈎藤	273
Gu Jing Cao	穀精草	115
Gu Ya	穀芽	193
Gua Lou Gen	栝樓根	268
Gua Lou Ren	栝樓仁	269
Guang Huo Siang	廣藿香	215
Guang Jin Cian Cao	廣金錢草	102
Guei Jhih	桂枝	68

H

Hai Jin Sha	海金沙	168
Hai Piao Siao	海螵蛸	250
He Huan Pi	合歡皮	11
He Shou Wu	何首烏	220
He Ye	荷葉	187
He Zih	訶子	60
Hong Ci	紅耆	141
Hong Hua	紅花	55
Hou Pu	厚朴	170
Hu Jhang	虎杖	218
Hu Ji Sheng	槲寄生	276
Hu Jiao	胡椒	209
Hu Ma Ren	胡麻仁	251
Hua Jiao	花椒	280
Hua Jyu Hong	化橘紅	73
Hua Shih	滑石	263
Huai Mi	槐米	256
Huang Bo	黃蘗	205
Huang Ci	黃耆	39

Huang Cin	黃芩	247
Huang Jing	黃精	217
Huang Lian	黃連	83
Huo Ma Ren	火麻仁	54
Huo Siang	藿香	8

J

Jhe Bei Mu	浙貝母	123
Jhih Ke	枳殼	74
Jhih Mu	知母	21
Jhih Shih	枳實	44
Jhih Zih	梔子	124
Jhu Ling	豬苓	221
Jhu Ru	竹茹	45
Jhu Ya Zao	豬牙皂	134
Ji Li	蒺藜	267
Ji Nei Jin	雞內金	124
Ji Sie Teng	雞血藤	259
Jiang Huang	薑黃	92
Jie Geng	桔梗	214
Jin Cian Cao	金錢草	169
Jin Yin Hua	金銀花	161
Jin Ying Zih	金櫻子	235
Jing Jie	荊芥	243
Jiou Cai Zih	韭菜子	14
Jyu Hong	橘紅	72
Jyu Hua	菊花	62
Jyu Mai	瞿麥	104
Jyuan Bo	卷柏	248
Jyue Ming Zih	決明子	56

K

Ku Shen	苦參	255
Ku Sing Ren	苦杏仁	31
Kuan Dong Hua	款冬花	119
Kun Bu	昆布	108

L

Lai Fu Zih	萊菔子	231
Lian Ciao	連翹	121
Lian Zih	蓮子	189
Long Dan	龍膽	130
Lou Lu	漏蘆	233
Lu Gen	蘆根	208
Lu Lu Tong	路路通	160
Luo Han Guo	羅漢果	176
Luo Shih Teng	絡石藤	267

M

Ma Chih Sian	馬齒莧	223
Ma Cian Zih	馬錢子	262
Ma Huang	麻黃	110
Mai Men Dong	麥門冬	193
Mai Ya	麥芽	143
Man Jing Zih	蔓荊子	277
Mang Siao	芒硝	185
Mei Yao	沒藥	185
Mi Meng Hua	密蒙花	52
Mo Han Lian	墨旱蓮	109
Mu Dan Pi	牡丹皮	181
Mu Gua	木瓜	59
Mu Li	牡蠣	194
Mu Siang	木香	42
Mu Tong	木通	10
Mu Zei	木賊	113

N

Nan Ban Lan Gen	南板藍根	46
Nan Sha Shen	南沙參	7
Niou Bang Zih	牛蒡子	27
Niou Huang	牛黃	51
Niou Si	牛膝	1
Nyn Jhen Zih	女貞子	158

O

Ou Jie	藕節	188

P

Pei Lan	佩蘭	116
Pi Pa Ye	枇杷葉	114

Pu Gong Ying	蒲公英	263
Pu Huang	蒲黃	272

R

Ren Dong Teng	忍冬藤	163
Ren Shen	人參	132
Rou Cong Rong	肉蓯蓉	71
Rou Dou Kou	肉豆蔻	184
Rou Guei	肉桂	67
Ru Siang	乳香	192

S

San Ci	三七	189
San Ling	三稜	259
Sang Bai Pi	桑白皮	178
Sang Jhih	桑枝	179
Sang Ji Sheng	桑寄生	264
Sang Piao Siao	桑螵蛸	174
Sang Ye	桑葉	177
Sha Ren	砂仁	18
Sha Yuan Ji Li	沙苑蒺藜	39
Shan Dou Gen	山豆根	257
Shan Jha	山楂	88
Shan Jhu Yu	山茱萸	85
Shan Nai	山柰	149
Shan Yao	山藥	106
She Chuang Zih	蛇床子	80
Shen Jin Cao	伸筋草	168
Sheng Ma	升麻	66
Shih Chang Pu	石菖蒲	6
Shih Di	柿蒂	150
Shih Gao	石膏	139
Shih Hu	石斛	100
Shih Jyue Ming	石決明	139
Shih Jyun Zih	使君子	230
Shih Liou Pi	石榴皮	138
Shih Nan Ye	石南葉	207
Shih Wei	石韋	228
Shou Wu Teng	首烏藤	219
Shuei Jhih	水蛭	142
Si Lian Cao	豨薟草	251
Si Sin	細辛	36
Si Yang Shen	西洋參	197
Sia Ku Cao	夏枯草	223
Sian He Cao	仙鶴草	9
Sian Mao	仙茅	91
Siang Fu	香附	99
Siang Ru	香薷	181
Siao Huei Siang	小茴香	120
Siao Ji	小薊	69
Sie Bai	薤白	13
Sie Jie	血竭	108
Sin Yi	辛夷	172
Su Mu	蘇木	241
Suan Zao Ren	酸棗仁	282
Suo Yang	鎖陽	99
Syu Duan	續斷	107
Syuan Fu Hua	旋覆花	146
Syuan Shen	玄參	245

T

Tai Zih Shen	太子參	224
Tao Ren	桃仁	201
Tian Jhu Huang	天竺黃	45
Tian Ma	天麻	126
Tian Men Dong	天門冬	37
Tian Nan Sing	天南星	30
Ting Li Zih	葶藶子	155
Tong Cao	通草	265
Tu Fu Ling	土茯苓	254
Tu Sih Zih	菟絲子	95

W

Wang Bu Liou Sing	王不留行	274
Wei Ling Sian	威靈仙	79
Wu Bei Zih	五倍子	61
Wu Jhu Yu	吳茱萸	118
Wu Ling Jhih	五靈脂	271
Wu Mei	烏梅	183
Wu Wei Zih	五味子	242

Wu Yao	烏藥	159
	Y	
Yan Hu Suo	延胡索	86
Ye Gan	射干	46
Yi Jhih	益智	17
Yi Mu Cao	益母草	154
Yi Yi Ren	薏苡仁	83
Yin Chen	茵陳	35
Yin Yang Huo	淫羊藿	112
Yu Jhu	玉竹	216
Yu Jin	鬱金	93
Yu Sing Cao	魚腥草	144
Yuan Jhih	遠志	216
	Z	
Zao Jia	皂莢	135
Zao Jiao Cih	皂角刺	135
Ze Lan	澤蘭	167
Ze Sie	澤瀉	12
Zih Cao	紫草	32
Zih Hua Di Ding	紫花地丁	275
Zih Su Geng	紫蘇梗	199
Zih Su Ye	紫蘇葉	200
Zih Su Zih	紫蘇子	200
Zih Wan	紫菀	38

Ministry of Health and Welfare 衛生福利部

Names in Hanyu Pinyin Form

	A	
Ai Ye	艾葉	34
	B	
Ba Dou	巴豆	90
Ba Ji Tian	巴戟天	180
Ba Jiao Hui Xiang	八角茴香	26
Bai Bian Dou	白扁豆	153
Bai Bu	百部	260
Bai Guo	白果	131
Bai He	百合	158
Bai Hua She She Cao	白花蛇舌草	141
Bai Ji	白及	48
Bai Jiang Can	白殭蠶	50
Bai Jie Zi	白芥子	253
Bai Lian	白斂	20
Bai Mao Gen	白茅根	145
Bai Qian	白前	98
Bai Shao	白芍	195
Bai Tpu Weng	白頭翁	227
Bai Wei	白薇	97
Bai Xian Pi	白鮮皮	105
Bai Zhi	白芷	22
Bai Zhu	白朮	41
Ban Xia	半夏	208
Ban Zhi Lian	半枝蓮	246
Bei Ban Lan Gen	北板藍根	148
Bei Sha Shen	北沙參	136
Bie Jia	鼈甲	270
Bin Lang	檳榔	29
Bing Pian	冰片	50
Bo He	薄荷	175
Bo Zi Ren	柏子仁	213
Bu Gu Zhi	補骨脂	225
	C	
Can Sha	蠶砂	49
Cang Er Zi	蒼耳子	279
Cang Zhu	蒼朮	42
Cao Dou Kou	草豆蔻	14
Cao Guo	草果	271
Cao Wu	草烏	2
Ce Bo Ye	側柏葉	213
Chai Hu	柴胡	52
Chan Tui	蟬蛻	65
Che Cian Zi	車前子	211
Che Qian Cao	車前草	210
Chen Pi	陳皮	75
Chen Xiang	沉香	26
Chi Shao	赤芍	196
Chi Xiao Dou	赤小豆	275
Ching Wei Zi	茺蔚子	154
Chou Chun Pi	臭椿皮	10
Chuan Lian Zi	川楝子	265
Chuan Mu Tong	川木通	78
Chuan Mu Xiang	川木香	278
Chuan Niu Xi	川牛膝	96
Chuan Wu	川烏	5
	D	
Da Fu Pi	大腹皮	28
Da Huang	大黃	234
Da Ji	大薊	69
Da Qing Ye	大青葉	147
Da Zao	大棗	148
Dai Zhe Shi	代赭石	139
Dan Dou Chi	淡豆豉	255
Dan Shen	丹參	238
Dan Zhu Ye	淡竹葉	164
Dang Gui	當歸	24
Dang Shen	黨參	82
Deng Xin Cao	燈心草	149
Di Fu Zi	地膚子	152
Di Gu Pi	地骨皮	166
Di Huang	地黃	231
Di Long	地龍	206

Di Yu	地榆	239
Ding Xiang	丁香	55
Dong Chong Xia Cao	冬蟲夏草	84
Dong Gua Zi	冬瓜子	47
Dong Kui Guo	冬葵果	173
Dou Kou	豆蔻	19
Du Huo	獨活	23
Du Zhong	杜仲	116
	E	
E Zhu	莪朮	94
Er Cha	兒茶	58
	F	
Fan Hong Hua	番紅花	89
Fan Xie Ye	番瀉葉	249
Fang Feng	防風	241
Fen Bei Jie	粉萆薢	105
Fo Shou Gan	佛手柑	78
Fu Ling	茯苓	222
Fu Pen Zi	覆盆子	236
Fu Xiao Ma	浮小麥	270
Fu Zi	附子	3
	G	
Gan Cao	甘草	136
Gan Jiang	乾薑	281
Gan Sui	甘遂	151
Gao Ben	藁本	156
Gao Liang Jiang	高良薑	15
Ge Gen	葛根	226
Ge Jie	蛤蚧	127
Ge Ke	蛤殼	176
Gou Ji	狗脊	64
Gou Qi Zi	枸杞子	165
Gou Teng	鈎藤	273
Gu Jing Cao	穀精草	115
Gu Ya	穀芽	193
Gua Lou Gen	栝樓根	268
Gua Lou Ren	栝樓仁	269
Guang Huo Xiang	廣藿香	215
Guang Jin Qian Cao	廣金錢草	102
Gui Zhi	桂枝	68
	H	
Hai Jin Sha	海金沙	168
Hai Piao Xiao	海螵蛸	250
He Huan Pi	合歡皮	11
He Shou Wu	何首烏	220
He Ye	荷葉	187
He Zi	訶子	60
Hong Hua	紅花	55
Hong Qi	紅耆	141
Hou Pu	厚朴	170
Hu Ji Sheng	槲寄生	276
Hu Jiao	胡椒	209
Hu Ma Ren	胡麻仁	251
Hu Zhang	虎杖	218
Hua Jiao	花椒	280
Hua Ju Hong	化橘紅	73
Hua Shi	滑石	263
Huai Mi	槐米	256
Huang Bo	黃蘗	205
Huang Jing	黃精	217
Huang Lian	黃連	83
Huang Qi	黃耆	39
Huang Qin	黃芩	247
Huo Ma Ren	火麻仁	54
Huo Xiang	藿香	8
	J	
Ji Li	蒺藜	267
Ji Nei Jin	雞內金	124
Ji Xie Teng	雞血藤	259
Jiang Huang	薑黃	92
Jie Geng	桔梗	214
Jin Qian Cao	金錢草	169
Jin Yin Hua	金銀花	161
Jin Ying Zi	金櫻子	235
Jing Jie	荊芥	243

Jiu Cai Zi	韭菜子	14
Ju Hong	橘紅	72
Ju Hua	菊花	62
Ju Mai	瞿麥	104
Juan Bo	卷柏	248
Jue Ming Zi	決明子	56
	K	
Ku Shen	苦參	255
Ku Xing Ren	苦杏仁	31
Kuan Dong Hua	款冬花	119
Kun Bu	昆布	108
	L	
Lai Fu Zi	萊菔子	231
Lian Qiao	連翹	121
Lian Zi	蓮子	189
Long Dan	龍膽	130
Lou Lu	漏蘆	233
Lu Gen	蘆根	208
Lu Lu Tong	路路通	160
Luo Han Guo	羅漢果	176
Luo Shi Teng	絡石藤	267
	M	
Ma Chi Xian	馬齒莧	223
Ma Huang	麻黃	110
Ma Qian Zi	馬錢子	262
Mai Men Dong	麥門冬	193
Mai Ya	麥芽	143
Man Jing Zi	蔓荊子	277
Mang Xiao	芒硝	185
Mei Yao	沒藥	185
Mi Meng Hua	密蒙花	52
Mo Han Lian	墨旱蓮	109
Mu Dan Pi	牡丹皮	181
Mu Gua	木瓜	59
Mu Li	牡蠣	194
Mu Tong	木通	10
Mu Xiang	木香	42
Mu Zei	木賊	113
	N	
Nan Ban Lan Gen	南板藍根	46
Nan Sha Shen	南沙參	7
Niu Bang Zi	牛蒡子	27
Niu Huang	牛黃	51
Niu Xi	牛膝	1
Nu Zhen Zi	女貞子	158
	O	
Ou Jie	藕節	188
	P	
Pei Lan	佩蘭	116
Pi Pa Ye	枇杷葉	114
Pu Gong Ying	蒲公英	263
Pu Huang	蒲黃	272
	Q	
Qian Cao	茜草	237
Qian Hu	前胡	203
Qian Nian Jian	千年健	143
Qian Niu Zi	牽牛子	204
Qian Shi	芡實	117
Qiang Huo	羌活	191
Qin Jiao	秦艽	127
Qin Pi	秦皮	122
Qing Dai	青黛	186
Qing Hao	青蒿	33
Qing Ma Zi	苘麻子	1
Qing Pi	青皮	76
Qing Xiang Zi	青葙子	59
Qiong Qiong	芎藭	63
Quan Xie	全蠍	244
	R	
Ren Dong Teng	忍冬藤	163
Ren Shen	人參	132
Rou Cong Rong	肉蓯蓉	71

Rou Dou Kou	肉豆蔻	184
Rou Gui	肉桂	67
Ru Xiang	乳香	192

S

San Ling	三稜	259
San Qi	三七	189
Sang Bai Pi	桑白皮	178
Sang Ji Sheng	桑寄生	264
Sang Piao Xiao	桑螵蛸	174
Sang Ye	桑葉	177
Sang Zhi	桑枝	179
Sha Ren	砂仁	18
Sha Yuan Ji Li	沙苑蒺藜	39
Shan Dou Gen	山豆根	257
Shan Nai	山柰	149
Shan Yao	山藥	106
Shan Zha	山楂	88
Shan Zhu Yu	山茱萸	85
She Chuang Zi	蛇床子	80
Shen Jin Cao	伸筋草	168
Sheng Ma	升麻	66
Shi Chang Pu	石菖蒲	6
Shi Di	柿蒂	150
Shi Gao	石膏	139
Shi Hu	石斛	100
Shi Jue Ming	石決明	139
Shi Jun Zi	使君子	230
Shi Liu Pi	石榴皮	138
Shi Nan Ye	石南葉	207
Shi Wei	石韋	228
Shou Wu Teng	首烏藤	219
Shui Zhi	水蛭	142
Su Mu	蘇木	241
Suan Zao Ren	酸棗仁	282
Suo Yang	鎖陽	99

T

Tai Zi Shen	太子參	224
Tao Ren	桃仁	201
Tian Ma	天麻	126
Tian Men Dong	天門冬	37
Tian Nan Xing	天南星	30
Tian Zhu Huang	天竺黃	45
Ting Li Zi	葶藶子	155
Tong Cao	通草	265
Tu Fu Ling	土茯苓	254
Tu Si Zi	菟絲子	95

W

Wang Bu Liu Xing	王不留行	274
Wei Ling Xian	威靈仙	79
Wu Bei Zi	五倍子	61
Wu Ling Zhi	五靈脂	271
Wu Mei	烏梅	183
Wu Wei Zi	五味子	242
Wu Yao	烏藥	159
Wu Zhu Yu	吳茱萸	118

X

Xi Lian Cao	豨薟草	251
Xi Xin	細辛	36
Xi Yang Shen	西洋參	197
Xia Ku Cao	夏枯草	223
Xian Mao	仙茅	91
Xiang Fu	香附	99
Xiang Ru	香薷	181
Xiao He Cao	仙鶴草	9
Xiao Hui Xiang	小茴香	120
Xiao Ji	小薊	69
Xie Bai	薤白	13
Xie Jie	血竭	108
Xin Yi	辛夷	172
Xu Duan	續斷	107
Xuan Fu Hua	旋覆花	146
Xuan Shen	玄參	245

Y

Yan Hu Su	延胡索	86
Ye Gan	射干	46

Yi Mu Cao	益母草	154
Yi Yi Ren	薏苡仁	83
Yi Zhi	益智	17
Yin Chen	茵陳	35
Yin Yang Huo	淫羊藿	112
Yu Jin	鬱金	93
Yu Xing Cao	魚腥草	144
Yu Zhu	玉竹	216
Yuan Zhi	遠志	216

Z

Zao Jia	皂莢	135
Zao Jiao Ci	皂角刺	135
Ze Lan	澤蘭	167
Ze Xie	澤瀉	12
Zhe Bei Mu	浙貝母	123
Zhi Ke	枳殼	74
Zhi Mu	知母	21
Zhi Shi	枳實	44
Zhi Zi	梔子	124
Zhu Ling	豬苓	221
Zhu Ru	竹茹	45
Zhu Ya Zao	豬牙皂	134
Zi Cao	紫草	32
Zi Hua Di Ding	紫花地丁	275
Zi Su Geng	紫蘇梗	199
Zi Su Ye	紫蘇葉	200
Zi Su Zi	紫蘇子	200
Zi Wan	紫菀	38

Ministry of Health and Welfare 衛生福利部

English Names

A

Acorus Rhizome	石菖蒲	6
Agaric	豬苓	221
Agastache Herb	藿香	8
Ailanthus Bark	臭椿皮	10
Akebia Lianoid Stem	木通	10
Alisma Tuber	澤瀉	12
American Ginseng	西洋參	197
Anemarrhena Rhizome	知母	21
Areca Husk	大腹皮	28
Argy Wormwood Leaf	艾葉	34
Arnebia Root	紫草	32
Asarum Root and Rhizome	細辛	36
Ash Bark	秦皮	122
Asparagus Root Tuber	天門冬	37
Astragalus Root	黃耆	39
Atractylodes Rhizome	蒼朮	42

B

Bamboo Shavings	竹茹	45
Baphicacanthus Rhizome and Root	南板藍根	46
Barbated Skullcap Herb	半枝蓮	246
Beautiful Sweetgum Fruit	路路通	160
Belvedere Fruit	地膚子	152
Betel Nut	檳榔	29
Bitter Apricot Seed	苦杏仁	31
Bitter Orange	枳殼	74
Black Sesame	胡麻仁	251
Blackberry-lily Rhizome	射干	46
Blackend Swallowwort Root and Rhizome	白薇	97
Blighted Wheat	浮小麥	270
Borneol	冰片	50
Buerger Pipewort Flower	穀精草	115
Bupleurum Root	柴胡	52

C

Cablin Patchouli Herb	廣藿香	215
Capejasmine Fruit	梔子	124
Cardamom Fruit	豆蔻	19
Cassia Seed	決明子	56
Cassia Twig	桂枝	68
Catechu	兒茶	58
Cattail Pollen	蒲黃	272
Cherokee Rose Fruit	金櫻子	235
Chicken's Gizzard-membrane	雞內金	124
Chinese Angelica Root	當歸	24
Chinese Arborvitae Twig and Leaf	側柏葉	213
Chinese Caterpillar Fungus	冬蟲夏草	84
Chinese Dodder Seed	菟絲子	95
Chinese Eaglewood	沉香	26
Chinese Gall	五倍子	61
Chinese Gentian Root and Rhizome	龍膽	130
Chinese Honeylocust Abnormal Fruit	豬牙皂	134
Chinese Honeylocust Fruit	皂莢	135
Chinese Honeylocust Spine	皂角刺	135
Chinese Mosla Herb	香薷	181
Chinese Photinia Leaf	石南葉	207
Chinese Pulsatilla Root	白頭翁	227
Chinese Starjasmine Lianoid Stem and Leaf	絡石藤	267
Chinese Taxillus Herb	桑寄生	264
Chinese Yam	山藥	106
Chingma Abutilon Seed	苘麻子	1
Chrysanthemum Flower	菊花	62
Chuanxiong Rhizome	芎藭	63
Cicada Exuviae	蟬蛻	65
Cinnamon Bark	肉桂	67
Clam Shell	蛤殼	176
Clematis Lianoid Stem	川木通	78
Clematis Root and Rhizome	威靈仙	79

Clove	丁香	55
Cluster Mallow Fruit	冬葵果	173
Coastal Glehnia Root	北沙參	136
Cocklebur Fruit	蒼耳子	279
Coix Kernel	薏苡仁	83
Colored Mistletoe Herb	槲寄生	276
Coltsfoot Flower	款冬花	119
Combined Spicebush Root Tuber	烏藥	159
Common Bletilla Tuber	白及	48
Common Burreed Tuber	三稜	259
Common Cephalanoplos Herb	小薊	69
Common Clubmoss Herb	伸筋草	168
Common Cnidium Fruit	蛇床子	80
Common Curculigo Rhizome	仙茅	91
Common Lophatherum Culm and Leaf	淡竹葉	164
Common Monkshood Mother Root Tuber	川烏	5
Common Vladimiria Root	川木香	278
Coptis Rhizome	黃連	83
Cornus Sarcocarp	山茱萸	85
Corydalis Tuber	延胡索	86
Costus Root	木香	42
Cowherb Seed	王不留行	274
Croton Seed	巴豆	90
Curcuma Root Tuber	鬱金	93
Cuttlebone	海螵蛸	250
Cyathula Root	川牛膝	96
Cyperus Rhizome	香附	99

D

Dahurian Angelica Root	白芷	22
Dark Plum Fruit	烏梅	183
Dendrobium Stem	石斛	100
Densefruit Pittany Rootbark	白鮮皮	105
Desert-living Cistanche	肉蓯蓉	71
Dipsacus Root	續斷	107
Dragon's Blood	血竭	108
Dry Ginger Rhizome	乾薑	281
Dwarf Lilyturf Root Tuber	麥門冬	193

E

Earthworm	地龍	206
East Asian Tree Fern Rhizome	狗脊	64
Ephedra Herb	麻黃	110
Epimedium Leaf	淫羊藿	112
Eucommia Bark	杜仲	116
Euryale Seed	芡實	117
Evodia Fruit	吳茱萸	118

F

Feather Cockscomb Seed	青葙子	59
Fennel Fruit	小茴香	120
Fermented Soybean	淡豆豉	255
Finger Citron	佛手柑	78
Flastem Milkvetch Seed	沙苑蒺藜	39
Fleeceflower Root Tuber	何首烏	220
Floweringquince Fruit	木瓜	59
Forsythia Fruit	連翹	121
Fortune Eupatorium Herb	佩蘭	116
Fragrant Solomonseal Rhizome	玉竹	216
Frankincense	乳香	192

G

Galangal Rhizome	高良薑	15
Gastrodia Tuber	天麻	126
Germinated Barley	麥芽	143
Giant Knotweed Rhizome and Root	虎杖	218
Ginkgo Seed	白果	131
Ginseng Root	人參	132
Glandularstalk St. Paulswort Herb	豨薟草	251
Glossy Privet Fruit	女貞子	158
Great Burdock Achene	牛蒡子	27
Great Burnet Root	地榆	239
Green Tangerine Peel	青皮	76
Grosvenor Momordica Fruit	羅漢果	176
Gypsum	石膏	139

H

Hairyvein Agrimonia Herb	仙鶴草	9
Hawthorn Fruit	山楂	88
Heartleaf Houttuynia Herb	魚腥草	144
Hedysarum Root	紅耆	141
Hematite	代赭石	139
Hemp Fruit	火麻仁	54
Heterophylly Falsestarwort Root Tuber	太子參	224
Hiraute Shiny Bugleweed Herb	澤蘭	167
Hogfennel Root	前胡	203
Honeysuckle Flower Bud	金銀花	161
Hypoglaucous Collett Yam Rhizome	粉萆薢	105

I

Immature Bitter Orange	枳實	44
India Madder Root and Rhizome	茜草	237
Indian Bread	茯苓	222
Indigowoad Leaf	大青葉	147
Indigowoad Root	北板藍根	148
Inula Flower	旋覆花	146

J

Jackinthepulpit Tuber	天南星	30
Japanese Ampelopsis Root Tuber	白蘞	20
Japanese Honeysuckle Stem	忍冬藤	163
Japanese Thistle Herb and Root	大薊	69
Jehol Ligusticum Rhizome and Root	藁本	156
Jujube Fruit	大棗	148
Jujube Seed	酸棗仁	282

K

Kaempferia Rhizome	山柰	149
Kansui Root Tuber	甘遂	151
Katsumada Galangal Seed	草豆蔻	14
Kelp	昆布	108
Kusnezoff Monkshood Root Tuber	草烏	2

L

Ladybell Root	南沙參	7
Lalang Grass Rhizome	白茅根	145
Largeleaf Gentian Root	秦艽	127
Largetrifolious Bugbane Rhizome	升麻	66
Leech	水蛭	142
Lightyellow Sophora Root	苦參	255
Lily Bulb	百合	158
Liquorice Root and Rhizome	甘草	136
Longhairy Antenoron Herb	金錢草	169
Longstamen Onion Bulb	薤白	13
Loquat Leaf	枇杷葉	114
Lotus Leaf	荷葉	187
Lotus Rhizome Node	藕節	188
Lotus Seed	蓮子	189
Lygodium Spore	海金沙	168

M

Magnolia Bark	厚朴	170
Magnolia Flower Bud	辛夷	172
Malaytea Scurfpea Fruit	補骨脂	225
Mantis Egg-case	桑螵蛸	174
Medicine Terminalia Fruit	訶子	60
Mirabilitum	芒硝	185
Mongolian Dandelion Herb	蒲公英	263
Monkshood Daughter Root Tuber	附子	3
Morinda Root	巴戟天	180
Motherwort Fruit	茺蔚子	154
Motherwort Herb	益母草	154
Mulberry Leaf	桑葉	177
Mulberry Rootbark	桑白皮	178
Mulberry Twig	桑枝	179
Myrrh	沒藥	185

N

Natural Indigo	青黛	186
Notoginseng Root	三七	189
Notopterygium Rhizome and Root	羌活	191

Nutmeg Seed	肉豆蔻	184
Nux Vomica	馬錢子	262

O

Obscured Homalomena Rhizome	千年健	143
Oriental Bezoar	牛黃	51
Oriental Wormwood Herb	茵陳	35
Oyster Shell	牡蠣	194

P

Pagodatree Flower Bud	槐米	256
Pale Butterflybush Flower	密蒙花	52
Palmleaf Raspberry Fruit	覆盆子	236
Parslane Herb	馬齒莧	223
Peach Seed	桃仁	201
Peony Root	白芍	195
Pepper	胡椒	209
Peppermint Herb	薄荷	175
Pepperweed Seed	葶藶子	155
Perilla Fruit	紫蘇子	200
Perilla Leaf	紫蘇葉	200
Perilla Stem	紫蘇梗	199
Persimmon Calyx	柿蒂	150
Pharbitis Seed	牽牛子	204
Phellodendron Bark	黃蘗	205
Philippine Violet Herb	紫花地丁	275
Pilose Asiabell Root	黨參	82
Pinellia Tuber	半夏	208
Pink Herb	瞿麥	104
Plantago Herb	車前草	210
Plantago Seed	車前子	211
Platycladi Seed	柏子仁	213
Platycodon Root	桔梗	214
Polygala Root	遠志	216
Pomegranate Pericarp	石榴皮	138
Pricklyash Peel	花椒	280
Prunella Spike	夏枯草	223
Pubescent Angelica Root	獨活	23
Pueraria Root	葛根	226
Pummelo Exocarp	化橘紅	73
Pyrrosia Leaf	石韋	228

R

Radish Seed	萊菔子	231
Rangooncreeper Fruit	使君子	230
Red Peony Root	赤芍	196
Red Sage Root and Rhizome	丹參	238
Red Tangerine Exocarp	橘紅	72
Reed Rhizome	蘆根	208
Rehmannia Root Tuber	地黃	231
Rhubarb	大黃	234
Rice Bean	赤小豆	275
Rice-grain Sprout	穀芽	193
Ricepaperplant Pith	通草	265
Rush Pith	燈心草	149

S

Safflower	紅花	55
Saffron Stigma	番紅花	89
Saposhnikovia Root	防風	241
Sappan Wood	蘇木	241
Schisandra Fruit	五味子	242
Schizonepeta Herb	荊芥	243
Scorpion	全蠍	244
Scouring Rush Herb	木賊	113
Scrophularia Root	玄參	245
Scutellaria Root	黃芩	247
Sea-ear Shell	石決明	139
Senna Leaf	番瀉葉	249
Sharpleaf Galangal Fruit	益智	17
Sichuan Chinaberry Fruit	川楝子	265
Silktree Albizzia Bark	合歡皮	11
Silkworm Dung	蠶砂	49
Simpleleaf Shrub Chastetree Fruit	蔓荊子	277
Smooth Greenbrier Rhizome	土茯苓	254
Snowbell-leaf Tickclover Herb	廣金錢草	102
Solomonseal Rhizome	黃精	217
Songaria Cynomorium Herb	鎖陽	99
Spreading Hedyotis Herb	白花蛇舌草	141

Star Anise Fruit	八角茴香	26
Stemona Root Tuber	百部	260
Stiff Silkworm	白殭蠶	50
Suberect Spatholobus Lianoid Stem	雞血藤	259
Sweet Wormwood Herb	青蒿	33

T

Tabasheer	天竺黃	45
Talc	滑石	263
Tamarishoid Spikemoss Herb	卷柏	248
Tangerine Peel	陳皮	75
Tansymustard Seed	葶藶子	155
Tatarian Aster Root and Rhizome	紫菀	38
Thunberg Fritillary Bulb	浙貝母	123
Tokay	蛤蚧	127
Tree Peony Bark	牡丹皮	181
Tribulus Fruit	蒺藜	267
Trichosanthes Root	栝樓根	268
Trichosanthes Seed	栝樓仁	269
Trogopterus Dung	五靈脂	271
Tsaoko Amomum Fruit	草果	271
Tuber Fleeceflower Lianoid Stem	首烏藤	219
Tuber Onion Seed	韭菜子	14
Turmeric Rhizome	薑黃	92
Turtle Shell	鼈甲	270
Twotooth Achyranthes Root	牛膝	1

U

Uncaria Stem with Hooks	鈎藤	273
Uniflower Swisscentaury Root	漏蘆	233

V

Vietnamese Sophora Root	山豆根	257
Villous Amomum Fruit	砂仁	18

W

Waxgourd Seed	冬瓜子	47
White Atractylodes Rhizome	白朮	41
White Hyacinth Bean	白扁豆	153
White Mustard Seed	白芥子	253
Willowleaf Swallowwort Rhizome and Root	白前	98
Wolfberry Fruit	枸杞子	165
Wolfberry Rootbark	地骨皮	166

Y

Yerbadetajo Herb	墨旱蓮	109

Z

Zedoaria Rhizome	莪朮	94

Ministry of Health and Welfare 衛生福利部

Scientific Names

A

Abutilon theophrasti Medic. 1
Acacia catechu (L. f.) Willd. 58
Achyranthes bidentata Blume 1
Aconitum carmichaeli Debx. 3, 5
Aconitum kusnezoffii Reichb. 2
Acorus gramineus Soland. 6
Adenophora axilliflora Borb. 7
Adenophora stricta Miq. 7
Adenophora tetraphylla (Thunb.) Fisch. 7
Agastache rugosa (Fisch. et Mey.) O. Kuntze 8
Agrimonia pilosa Ledeb. 9
Ailanthus altissima (Mill.) Swingle 10
Akebia quinata (Thunb.) Decne. 10
Akebia trifoliata (Thunb.) Koidz. 10
Akebia trifoliata (Thunb.) Koidz. var. *australis* (Diels) Rehd. 10
Albizzia julibrissin Durazz. 11
Alisma orientale (Sam.) Juz. 12
Allium chinensis G. Don 13
Allium macrostemon Bge. 13
Allium tuberosum Rottl. ex Spreng. 14
Alpinia katsumadai Hayata 14
Alpinia officinarum Hance 15
Alpinia oxyphylla Miq. 17
Amomum cardamomum L. 19
Amomum longiligulare T. L. Wu 18
Amomum tsaoko Crevost et Lemaire 271
Amomum villosum Lour. 18
Amomum villosum Lour. var. *xanthioides* (Wall. ex Bak.) T. L. Wu et Senjen 18
Ampelopsis japonica (Thunb.) Makino 20
Anemarrhena asphodeloides Bunge 21
Angelica dahurica (Fisch. ex Hoffm.) Benth. et Hook. f. 22
Angelica dahurica (Fisch.) Benth. et Hook. var. *formosana* (H. Boissieu) Yen 22
Angelica pubescens Maxim. f. *biserrata* Shan et Yuan 23
Angelica sinensis (Oliv.) Diels 24
Aquilaria sinensis (Lour.) Gilg 26
Arctium lappa L. 27
Areca catechu L. 28, 29
Arisaema amurense Maxim. 30
Arisaema erubescens (Wall.) Schott 30
Arisaema heterophyllum Blume 30
Arnebia euchroma (Royle) Johnst. 32
Arnebia guttata Bunge 32
Artemisia annua L. 33
Artemisia argyi Levl. et Vant. 34
Artemisia capillaris Thunb. 35
Artemisia scoparia Waldst. et Kit. 35
Asarum heterotropoides Fr. Schmidt var. *mandshuricum* Kitag. 36
Asarum sieboldii Miq. 36
Asarum sieboldii Miq. var. *seoulense* Nakai 36
Asparagus cochinchinensis (Lour.) Merr. 37
Aster tataricus L. f. 38
Astragalus complanatus R. Br. 39
Astragalus membranaceus (Fisch.) Bge. 39
Astragalus membranaceus (Fisch.) Bge. var. *mongholicus* (Bge.) Hsiao 39
Atractylodes chinensis (DC.) Koidz. 42
Atractylodes lancea (Thunb.) DC. 42
Atractylodes macrocephala Koidz. 41
Aucklandia lappa Decne. 42

B

Bambusa textilis McClure 45
Bambusa tuldoides Munro 45
Baphicacanthus cusia (Nees) Bremek. 46, 186
Beauveria bassiana (Bals.) Vuillant 50
Belamcanda chinensis (L.) DC. 46
Benincasa hispida (Thunb.) Cogn. 47
Bletilla striata (Thunb.) Reichb. f. 48

Bombyx mori L. 49, 50
Bos taurus domesticus Gmelin 51
Boswellia carterii Birdw. 192
Buddleja officinalis Maxim. 52
Bupleurum chinense DC. 52
Bupleurum scorzonerifolium Willd. 52
Buthus martensii Karsch 244

C

Caesalpinia sappan L. 241
Cannabis sativa L. 54
Carthamus tinctorius L. 55
Cassia acutifolia Delile 249
Cassia angustifolia Vahl 249
Cassia obtusifolia L. 56
Cassia tora L. 56
Celosia argentea L. 59
Chaenomeles speciosa (Sweet) Nakai 59
Chrysanthemum morifolium (Ramat.) Tzvel. 62
Cibotium barometz (L.) J. Smith 64
Cimicifuga dahurica (Turcz.) Maxim. 66
Cimicifuga foetida L. 66
Cimicifuga heracleifolia Komar. 66
Cinnamomum cassia Presl 67,68
Cirsium japonicum DC. 69
Cirsium setosum (Willd.) M. B. 69
Cistanche deserticola Y. C. Ma 71
Cistanche tubulosa (Schrenk) Wight 71
Citrus aurantium L. 44, 74
Citrus grandis (L.) Osbeck 73
Citrus grandis (L.) Osbeck var. *tomentosa* Hort. 73
Citrus medica L. var. *sarcodactylis* Swingle 78
Citrus reticulata Blanco 72, 75, 76
Citrus sinensis Osbeck 44
Clematis armandii Franch. 78
Clematis chinensis Osbeck 79
Clematis hexapetala Pall. 79
Clematis manshurica Rupr. 79
Clematis montana Buch.-Ham. 78
Cnidium monnieri (L.) Cuss. 80
Codonopsis pilosula (Franch.) Nannf. 82
Codonopsis pilosula Nannf.
var. *modesta* (Nannf.) L. T. Shen 82
Codonopsis tangshen Oliv. 82
Coix lacryma-jobi L. var. *ma-yuen* (Roman.) Stapf 83
Commiphora molmol Engl. 185
Commiphora myrrha Engl. 185
Coptis chinensis Franch. 83
Cordyceps sinensis (Berk.) Sacc. 84
Cornus officinalis Sieb. et Zucc. 85
Corydalis yanhusuo W. T. Wang 86
Crassostrea angulata Lamarck 194
Crataegus pinnatifida Bunge 88
Crataegus pinnatifida Bunge var. *major* N. E. Br. 88
Crocus sativus L. 89
Croton tiglium L. 90
Cryptotympana pustulata Fabricius 65
Curculigo orchioides Gaertn. 91
Curcuma kwangsiensis S. G. Lee et C. F. Liang 93, 94
Curcuma longa L. 92, 93
Curcuma phaeocaulis Val. 93, 94
Curcuma wenyujin Y. H. Chen et C. Ling 93, 94
Cuscuta australis R. Br. 95
Cuscuta chinensis Lam. 95
Cyathula officinalis Kuan 96
Cyclina sinensis Gmelin 176
Cynanchum atratum Bunge 97
Cynanchum glaucescens (Decne.) Hand.-Mazz. 98
Cynanchum stauntonii (Decne.) Schltr. ex Levl. 98
Cynanchum versicolor Bunge 97
Cynomorium songaricum Rupr. 99
Cyperus rotundus L. 99

D

Daemonorops draco Bl. 108
Dendrobium candidum Wall. ex Lindl. 100
Dendrobium chrysanthum Wall. 100
Dendrobium fimbriatum Hook. var. *oculatum* Hook. 100
Dendrobium loddigesii Rolfe. 100
Dendrobium nobile Lindl. 100

Descurainia sophia (L.) Webb. ex Prantl. 155
Desmodium styracifolium (Osb.) Merr. 102
Dianthus chinensis L. 104
Dianthus superbus L. 104
Dictamnus dasycarpus Turcz. 105
Dioscorea doryphora Hance 106
Dioscorea hypoglauca Palibin 105
Dioscorea japonica Thunb.
var. *pseudojaponica* (Hayata) Yamam. 106
Dioscorea opposita Thunb. 106
Diospyros kaki Thunb. 150
Dipsacus asperoides C. Y. Cheng et T. M. Ai 107
Dolichos lablab L. 153
Dryobalanops aromatica Gaertn. f. 50

E

Ecklonia kurome Okam. 108
Eclipta prostrata L. 109
Ephedra equisetina Bge. 110
Ephedra intermedia Schrenk et C. A. Mey. 110
Ephedra sinica Stapf 110
Epimedium brevicornu Maxim. 112
Epimedium koreanum Nakai 112
Epimedium sagittatum (Sieb. et Zucc.) Maxim. 112
Equisetum hyemale L. 113
Eriobotrya japonica (Thunb.) Lindl. 114
Eriocaulon buergerianum Koern. 115
Eucommia ulmoides Oliv. 116
Eugenia caryophyllata Thunberg 55
Eupatorium fortunei Turcz. 116
Euphorbia kansui T. N. Liou ex T. P. Wang 151
Euryale ferox Salisb. 117
Evodia rutaecarpa (Juss.) Benth. 118
Evodia rutaecarpa (Juss.) Benth.
var. *bodinieri* (Dode) Huang 118
Evodia rutaecarpa (Juss.) Benth.
var. *officinalis* (Dode) Huang 118

F

Foeniculum vulgare Mill. 120
Forsythia suspensa (Thunb.) Vahl 121
Fraxinus chinensis Roxb. 122
Fraxinus rhynchophylla Hance 122
Fraxinus stylosa Lingelsh. 122
Fraxinus szaboana Lingelsh. 122
Fritillaria thunbergii Miq. 123

G

Gallus gallus domesticus Brisson 124
Gardenia jasminoides Ellis 124
Gastrodia elata Bl. 126
Gekko gecko L. 127
Gentiana crassicaulis Duthie ex Burk. 127
Gentiana dahurica Fisch. 127
Gentiana macrophylla Pall. 127
Gentiana manshurica Kitag. 130
Gentiana rigescens Franch. 130
Gentiana scabra Bge. 130
Gentiana straminea Maxim. 127
Gentiana triflora Pall. 130
Ginkgo biloba L. 131
Gleditsia sinensis Lam. 134, 135
Glehnia littoralis F. Schmidt ex Miq. 136
Glycine max (L.) Merr. 255
Glycyrrhiza glabra L. 136
Glycyrrhiza inflata Bat. 136
Glycyrrhiza uralensis Fisch. 136

H

Haliotis asinina L. 139
Haliotis discus hannai Ino 139
Haliotis diversicolor Reeve 139
Haliotis laevigata Donovan 139
Haliotis ovina Gmelin 139
Haliotis ruber Leach 139
Hedyotis diffusa Willd. 141
Hedysarum polybotrys Hand.-Mazz. 141
Hierodula patellifera Serville 174
Hirudo nipponica Whitman 142
Homalomena occulta (Lour.) Schott 143

Hordeum vulgare L. 143
Houttuynia cordata Thunb. 144

I

Illicium verum Hook. f. 26
Imperata cylindrica (L.) Beauv.
var. *major* (Nees) C. E. Hubb. 145
Inula britannica L. 146
Inula japonica Thunb. 146
Isatis indigotica Fort. 147, 148, 186

J

Juncus effusus L. 149

K

Kaempferia galanga L. 149
Kochia scoparia (L.) Schrad. 152

L

Laminaria japonica Aresch. 108
Leonurus japonicus Houtt. 154
Lepidium apetalum Willd. 155
Ligusticum chuanxiong Hortorum 63
Ligusticum jeholense Nakai et Kitag. 156
Ligusticum sinense Oliv. 156
Ligustrum lucidum Ait. 158
Lilium brownii F. E. Brown var. *viridulum* Baker 158
Lilium lancifolium Thunb. 158
Lilium pumilum DC. 158
Lindera aggregata (Sims) Kosterm. 159
Liquidambar formosana Hance 160
Lonicera confusa DC. 161
Lonicera dasystyla Rehd. 161
Lonicera hypoglauca Miq. 161
Lonicera japonica Thunb. 161, 163
Lophatherum gracile Brongn. 164
Lycium barbarum L. 165, 166
Lycium chinense Mill. 165, 166
Lycopodium japonicum Thunb. 168
Lycopus lucidus Turcz. 167
Lycopus lucidus Turcz. var. *hirtus* Regel 167
Lygodium japonicum (Thunb.) Sw. 168
Lysimachia christinae Hance 169

M

Magnolia biondii Pamp. 172
Magnolia denudata Desr. 172
Magnolia officinalis Rehd. et Wils. 170
Magnolia officinalis Rehd. et Wils.
var. *biloba* Rehd. et Wils. 170
Magnolia sprengeri Pamp. 172
Malva verticillata L. 173
Melaphis chinensis (Bell) Baker 61
Melia toosendan Sieb. et Zucc. 265
Mentha haplocalyx Briq. 175
Meretrix meretrix L. 176
Momordica grosvenori Swingle 176
Morinda officinalis How 180
Morus alba L. 177, 178, 179
Mosla chinensis Maxim. 181
Myristica fragrans Houtt. 184

N

Nelumbo nucifera Gaertn. 187, 188, 189
Notopterygium forbesii Boiss. 191
Notopterygium incisum Ting ex H. T. Chang 191

O

Ophiopogon japonicus (L. f.) Ker Gawl. 193
Oryza sativa L. 193
Ostrea gigas Thunb. 194
Ostrea rivularis Gould 194
Ostrea talienwhanensis Crosse 194

P

Paeonia lactiflora Pall. 195, 196
Paeonia suffruticosa Andr. 181
Paeonia veitchii Lynch 196
Panax ginseng C. A. Meyer 132
Panax notoginseng (Burk.) F. H. Chen 189

Ministry of Health and Welfare 衛生福利部

Panax quinquefolium L. 197
Pelodiscus sinensis Wiegmann 270
Perilla frutescens (L.) Britt. 199, 200
Peucedanum decursivum (Miq.) Maxim. 203
Peucedanum praeruptorum Dunn 203
Pharbitis nil (L.) Choisy 204
Pharbitis purpurea (L.) Voigt 204
Phellodendron amurense Rupr. 205
Phellodendron chinense Schneid. 205
Pheretima aspergillum E. Perrier 206
Pheretima guillelmi Michaelsen 206
Pheretima pectinifera Michaelsen 206
Pheretima vulgaris Chen 206
Photinia serrulata Lindl. 207
Phragmites communis Trinus 208
Phyllostachys nigra (Lodd.) Munro
var. *henonis* (Mitf.) Stapf ex Rendle 45
Pinellia ternata (Thunb.) Breit. 208
Piper nigrum L. 209
Plantago asiatica L. 210, 211
Plantago depressa Willd. 210, 211
Platycladus orientalis (L.) Franco 213
Platycodon grandiflorum (Jacq.) A. DC. 214
Pogostemon cablin (Blanco) Benth. 215
Polygala sibirica L. 216
Polygala tenuifolia Willd. 216
Polygonatum cyrtonema Hua 217
Polygonatum kingianum Coll. et Hemsl. 217
Polygonatum odoratum (Mill.) Druce 216
Polygonatum sibiricum Delar. ex Redoute 217
Polygonum cuspidatum Sieb. et Zucc. 218
Polygonum multiflorum Thunb. 219, 220
Polygonum tinctorium Ait. 186
Polyporus umbellatus (Pers.) Fries 221
Poria cocos (Schw.) Wolf 222
Portulaca oleracea L. 223
Prunella vulgaris L. 223
Prunus armeniaca L. 31
Prunus armeniaca L. var. *ansu* Maxim. 31
Prunus davidiana (Carr.) Franch. 201
Prunus mandshurica (Maxim.) Koehne 31
Prunus mume (Sieb.) Sieb. et Zucc. 183
Prunus persica (L.) Batsch 201
Prunus sibirica L. 31
Pseudostellaria heterophylla
(Miq.) Pax ex Pax et Hoffm. 224
Psoralea corylifolia L. 225
Pueraria lobata (Willd.) Ohwi 226
Pueraria thomsonii Benth. 226
Pulsatilla chinensis (Bunge) Regel 227
Punica granatum L. 138
Pyrrosia lingua (Thunb.) Farwell 228
Pyrrosia petiolosa (Christ) Ching 228
Pyrrosia sheareri (Bak.) Ching 228

Q

Quisqualis indica L. 230

R

Raphanus sativus L. 231
Rehmannia glutinosa Libosch. 231
Rhaponticum uniflorum (L.) DC. 233
Rheum officinale Baillon 234
Rheum palmatum L. 234
Rheum tanguticum Maxim. ex Balf. 234
Rhus chinensis Mill. 61
Rhus potaninii Maxim. 61
Rhus punjabensis Stew.
var. *sinica* (Diels) Rehd. et Wils. 61
Rosa laevigata Michx. 235
Rubia cordifolia L. 237
Rubus chingii Hu 236

S

Salvia miltiorrhiza Bge. 238
Sanguisorba officinalis L. 239
Sanguisorba officinalis L.
var. *longifolia* (Bert.) Yu et Li 239
Saposhnikovia divaricata (Turcz.) Schischk. 241
Schisandra chinensis (Turcz.) Baill. 242

Schisandra sphenanthera Rehd. et Wils. 242
Schizonepeta tenuifolia Briq. 243
Schizostachyum chinense Rendle 45
Scrophularia ningpoensis Hemsl. 245
Scutellaria baicalensis Georgi 247
Scutellaria barbata D. Don 246
Selaginella pulvinata (Hook. et Grev.) Maxim. 248
Selaginella tamariscina (Beauv.) Spring 248
Sepia esculenta Hoyle 250
Sepiella maindroni de Rochebrune 250
Sesamum indicum L. 251
Siegesbeckia glabrescens Makino 251
Siegesbeckia orientalis L. 251
Siegesbeckia pubescens Makino 251
Sinapis alba L. 253
Sinocalamus beecheyanus (Munro) McClure var. *pubescens* P. F. Li 45
Smilax glabra Roxb. 254
Sophora flavescens Ait. 255
Sophora japonica L. 256
Sophora tonkinensis Gapnep. 257
Sparganium stoloniferum Buch.-Ham. 259
Spatholobus suberectus Dunn 259
Statilia maculata Thunb. 174
Stemona japonica (Bl.) Miq. 260
Stemona sessilifolia (Miq.) Miq. 260
Stemona tuberosa Lour. 260
Strychnos nux-vomica L. 262

T

Taraxacum formosanum Kitamura 263
Taraxacum mongolicum Hand.-Mazz. 263
Taxillus chinensis (DC.) Danser 264
Tenodera sinensis Saussure 174
Terminalia chebula Retz. 60
Terminalia chebula Retz. var. *tomentella* Kurt. 60
Tetrapanax papyriferus (Hook.) K. Koch 265
Trachelospermum jasminoides (Lindl.) Lem. 267
Tribulus terrestris L. 267
Trichosanthes kirilowii Maxim. 268, 269
Trichosanthes rosthornii Harms 268, 269
Trionyx sinensis Wiegmann 270
Triticum aestivum L. 270
Trogopterus xanthipes Milne-Edwards 271
Tussilago farfara L. 119
Typha angustifolia L. 272
Typha orientalis Presl 272

U

Uncaria gambir Roxb. 58
Uncaria hirsuta Havil. 273
Uncaria macrophylla Wall. 273
Uncaria rhynchophylla (Miq.) Jacks. 273
Uncaria sessilifructus Roxb. 273
Uncaria sinensis (Oliv.) Havil. 273

V

Vaccaria segetalis (Neck.) Garcke 274
Vigna angularis Ohwi et Ohashi 275
Vigna calcaratus Roxb. 275
Viola yedoensis Makino 275
Viscum coloratum (Komar.) Nakai 276
Vitex trifolia L. 277
Vitex trifolia L. var. *simplicifolia* Cham. 277
Vladimiria souliei (Franch.) Ling 278
Vladimiria souliei (Franch.) Ling var. *cinerea* Ling 278

W

Whitmania acranulata Whitman 142
Whitmania pigra Whitman 142

X

Xanthium sibiricum Patr. 279

Z

Zanthoxylum bungeanum Maxim. 280
Zanthoxylum schinifolium Sieb. et Zucc. 280
Zingiber officinale Rosc. 281

Ziziphus jujuba Mill. 148

Ziziphus jujuba Mill. var. *spinosa* (Bunge) Hu ex H. F. Chou 282

Ministry of Health and Welfare 衛生福利部

Ministry of Health and Welfare
衛生福利部

Taiwan Herbal Pharmacopeia 2nd Edition English version

Title: Taiwan Herbal Pharmacopeia 2nd Edition English version

Publishing Agent: Ministry Health and Welfare, Taiwan, R.O.C.

Publisher: Tzou-Yien Lin

Address: No.488, Sec. 6, Zhongxiao E. Rd., Nangang Dist., Taipei City 115, Taiwan (R.O.C.)

Website: http://www.mohw.gov.tw

Tel: +886-2-8590-6666

Fax:+886-2-8590-7076

Date of Publication: November, 2016

Edition: First edition, First print

Printed by: Sun-Wei Culture Co.,Ltd.

Tel: +886-2-2958-6010

Exhibition Place:

Government Publications Bookstore Sungjiang branch

F1, No. 209, Sung Jiang Road, Taipei City 104, Taiwan, R.O.C.

Tel: (02) 2518-0207

http://www.govbooks.com.tw

Wunan Cultural Square

No. 6 Zhongshan Road, Taichung City 400, Taiwan, R.O.C.

Tel: (04) 2226-0330 ext. 821

http://www.wunanbooks.com.tw

Price: NTD150

GPN: 4310501775

◎ All rights reserved. Any form of using or quotation, part or all should be authorized by the Ministry Health and Welfare. ◎

衛 生 福 利 部

Ministry of Health and Welfare

促 進 全 民 健 康 與 福 祉